Price List & Specifications Guide

August 2020

DATESWEISER

datesweiser.com

Rev 2020.1

datesweiser.com

Corporate Office / Factory
1700 Broadway Street
Buffalo, NY 14212
p 716.891.1700

National Sales Office / Showroom
1300 6th Ave, 2nd Floor
New York, NY 10019
p 212.727.8855

Table of Contents

Introduction 5

Using the Price List 5

Materials + Finishes 6

Product Maintenance 13

Highline Collection 15

Conference Tables

Rectangular, 42″–48″ 16

Rectangular, 54″ 36

Rectangular, 60″ 52

Rectangular, 72″ 68

Elliptical, 48″–72″ 84

Boat, 48″–72″ 100

Trapezoid, 48″–72″ 116

Meeting Tables

Square, Round and Elliptical, 42″–84″ 132

Credenzas

Credenzas, 64″–99″ 144

Highline Fifty Collection 159

Conference Tables

Rectangular, 48″ 160

Rectangular, 54″ 178

Rectangular, 60″ 194

Rectangular, 72″ 210

Boat, 48″–72″ 226

Meeting Tables

Square and Round, 48″–72″ 240

Credenzas

Credenzas, 66″–114″ 250

Highline Twenty-Five Collection 261

Credenzas, 60″–108″ width 262

Technical Information 274

Highline Conference Tables 275

Highline Meeting Tables 283

Highline Credenzas 290

Highline Fifty Conference Tables 295

Highline Fifty Meeting Tables 305

Highline Fifty Credenzas 314

Highline Twenty-Five Credenzas 320

Terms and Conditions 326

Introduction

The DatesWeiser Price List and Specifications Guide introduces our offerings and provides you with the ability to specify and price them.

Four collections are showcased:
- Highline Conference Tables, Meeting Tables, and Credenzas
- Highline Fifty Conference Tables, Meeting Tables, and Credenzas
- Highline Twenty-Five Credenzas

Materials and finishes available for the collections are described on the next page.

Technical Information about our furniture begins on **page 274**. You will find detailed descriptions about construction, elevations, power and connectivity, credenza configurations and options.

FSC® Certification: FSC-C003538
Responsibly harvested materials certified by the Forest Stewardship Council are available upon request and may increase pricing. Requests for FSC certified materials or LEED certification must be made before an order is processed.

USING THE PRICE LIST

Product information is presented as follows:
- General description of the product.
- Dimensions of the product and additional details.
- Pattern number: Code that denotes the product line (02 Highline Collection/ 03 Highline Fifty Collection/ 04 Highline Twenty-Five Collection.
- Starting Price: The lowest base price, which represents the most cost-effective finishes and configuration.
- Steps: Options, finishes and other features that allow you to build the pieces as you desire.
- Some options carry an additional cost. The cost of the option needs to be added to the Starting Price shown at the top of the page. For microphones and grommets please specify quantity desired.

Start with the pattern number and starting price. Then select materials and options using the codes provided. Add additional costs from selections (if applicable). Confirm quantities and email to **customerservice@datesweiser.com**.

Shipping charges will be added to your order. For a shipping quote contact your sales representative, email **customerservice@datesweiser.com** or call us toll free at 716.891.1700.

If you don't see what you want, we are happy to work with you to develop a unique product solution. Contact **customerservice@datesweiser.com** or call 716.891.1700 for a custom quote.

MATERIALS + FINISHES

Selecting materials and other features are the first steps to ordering your DatesWeiser furniture. As you move through the steps on the product page, you will need to fill in the blanks with the codes for the finishes and features you select.

Wood veneers are selected from the finest hardwoods available around the world and top coated with a low-VOC, post-catalyzed finish. The typical sheen is 30%.

Veneers come in three price ranges or Tiers. Veneers are described as follows:
- Cut: Plain-sliced, rift, quartered, engineered.
- Species: Oak, Walnut, etc.
- Finish: Natural, Smoked, Dark, Cerused, etc.

Quartered, rift-cut and engineered veneers are slip matched with the exception of Black Limba. Plain-sliced veneers are book matched.

For example, the finish code T124 denotes Tier 1 Plain-sliced Maple, Natural, and T227 denotes Tier 2 Quartered Walnut, Natural.

Requests for FSC certified materials must be made before an order can be processed.

Glass 3/8" thick annealed low iron. DatesWeiser offers 14 standard back paint colors.
- GC_ _ Back Painted Clear Glass: Polished glass with back paint. Color codes are entered in the blanks. For example GC01 refers to clear glass back painted white and GC02 refers to clear glass back painted Grey.
- GE_ _ Back Painted Etched Matte Glass: Glass that is acid etched to a matte finish.
- GC00 Clear tempered glass with no back paint. Available on credenzas only.

Solid Surface Materials
- CS01 Corian Glacier White ½" thickness.
- QS_ _ Caesarstone 2cm thickness.

Certain Caesarstone-topped tables of 60" width and above may require an additional top section.

Paint
- SL_ _ Satin Lacquer: Opaque paint with a 50% typical sheen. Color codes are entered in the blanks.
- HG_ _ High Gloss Polyester: Opaque paint with a hand rubbed high gloss finish.

Metal
- MC_ _ Powder Coat: A coating that is applied electrostatically as a dry powder and is then cured under heat to allow it to flow and form a "skin." It is used to create a hard finish that is more durable than conventional paint. Color codes are entered in the blanks.
- PM_ _ Premium Metal: Electroplating produces a premium metal finish. Finishes are entered in the blanks.

Leather
- AU_ _ Spinneybeck Acqua leather is water-repellent, heavy, and durable, with a slightly raised grain texture.

DatesWeiser collaborates with leading colorists to develop a palette particularly suited to the executive workplace. This range is available on all our products and coordinates with our extensive veneer offering. To order actual finish samples, please contact **customerservice@datesweiser.com** or your local DatesWeiser representative visit www.datesweiser.com/contacts. If you don't see what you want, we are happy to work with you to develop a unique product solution.

DatesWeiser printed and veneer samples offer an example of what a typical veneer will look like, within a range of acceptability carefully determined by DatesWeiser. Samples and printed sample materials should be used as reference only.

STANDARD FINISHES

Veneer: Tier 1
T102 Rift European White Oak, slip match, Natural
T105 Plain-sliced Walnut, book match, Natural
T124 Plain-sliced Maple, book match, Natural
T131 Engineered Macassar Ebony, slip match, Natural
T142 Rift American White Oak, slip match, Natural

Veneer: Tier 2
T204 Rift European White Oak, slip match, Dark Ceruse
T206 Plain-sliced Walnut, book match, Smoked
T207 Plain-sliced Walnut, book match, Dark
T227 Quartered Walnut, slip match, Natural
T228 Quartered Black Limba, book match, Natural
T229 Quartered Wenge, slip match, Natural

Veneer: Tier 3
*Available as non-standard finishes
T300 Plain-sliced White Oak, book match, White Wash
T301 Rift European White Oak, slip match, Weathered Grey
T339 Plain-sliced White Oak, book match, Grey Ceruse
T340 Rift American White Oak, slip match, Sand Ceruse
T341 Rift American White Oak, slip match, Greige Ceruse

Back Painted Glass: Clear / Etched Matte
GC01 / GE01 White
GC02 / GE02 Grey
GC03 / GE03 Black
GC04 / GE04 Coco
GC20 / GE20 Red
GC21 / GE21 Taupe
GC22 / GE22 Quartz Grey
GC23 / GE23 Light Grey
GC24 / GE24 Light Beige
* GC00 Clear Glass available on credenzas only

Solid Surface
CS01 Corian, Glacier White
QS01 Caesarstone, Fresh Concrete
QS04 Caesarstone, Raw Concrete
QS03 Caesarstone, Sleek Concrete

Paint: High Gloss Polyester / Satin Lacquer
HG01 / SL01 White
HG02 / SL02 Light Beige
HG03 / SL03 Sand
HG04 / SL04 Taupe
HG05 / SL05 Light Brown
HG06 / SL06 Light Grey
HG07 / SL07 Quartz Grey
HG08 / SL08 Umbra Grey
HG09 / SL09 Black Brown
HG10 / SL10 Yellow Finch
HG11 / SL11 Jack O Lantern
HG12 / SL12 Racing Orange
HG13 / SL13 Jet Black
HG20 / SL 20 Red

Metal

Powder Coat
MC01 White
MC02 Light Grey
MC03 Quartz Grey
MC04 Umbra Grey
MC05 Black Brown
MC11 Jet Black
MC20 Red

Powder Coat
MC06 Silver
MC08 Gun Metal
MC09 Bronze
MC12 Black
MC13 Warm Grey
MC14 Soft White

Premium
PM01 Polished Chrome
PM02 Satin Nickel
PM03 Oil Rubbed Bronze

Leather

Spinneybeck: Acqua
AU 0625 Strait Dover
AU 0635 Long Island Sound
AU 0614 River Thames
AU 0659 Blue Marlin
AU 0631 Cantabrian Sea
AU 0623 Jewelfish
AU 0647 Straits of Gibraltar
AU 0608 Botany Bay
AU 0607 Lake Como
AU 0604 Del Mar
AU 0605 Tahiti
AU 0639 Aquitania
AU 0642 Longship
AU 0617 Black Sea
AU 0646 Sea Wolf

Veneer: Tier 1

T124 Plain-sliced Maple, Natural

T102 Rift European White Oak, Natural

T142 Rift American White Oak, Natural

T105 Plain-sliced Walnut, Natural

T131 Reconstituted Macassar Ebony, Natural

Veneer: Tier 2

T206 Plain-sliced Walnut, Smoked

T227 Quartered Walnut, Natural

T228 Quartered Black Limba, Natural

T229 Quartered Wenge, Natural

T204 Rift European White Oak, Dark Ceruse

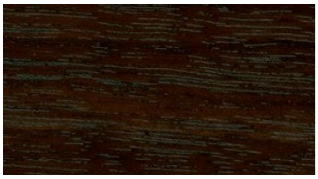

T207 Plain-sliced Walnut, Dark

Veneer:

Tier 3 Available as non-standard finishes

T300 Plain-sliced White Oak, White Wash

T301 Rift European White Oak, Weathered Grey

T339 Plain-sliced White Oak, Grey Ceruse

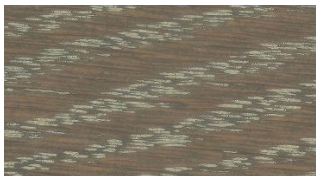

T340 Rift American White Oak, Sand Ceruse

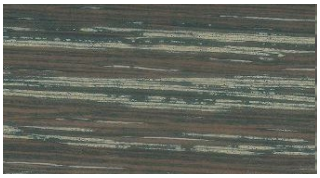

T341 Rift American White Oak, Greige Ceruse

Back Painted Glass: Clear + Etched Matte

GC01 / GE01 White

GC24 / GE24 Light Beige

GC21 / GE21 Taupe

GC23 / GE23 Light Grey

GC02 / GE02 Grey

GC22 / GE22 Quartz Grey

GC04 / GE04 Coco

GC03 / GE03 Black

GC20 / GE20 Red

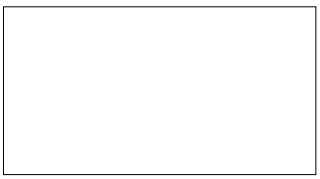

GC00 Clear Glass, no back-paint
Available on credenzas only

Solid Surface

CS01 Corian, Glacier White

QS01 Caesarstone, Fresh Concrete

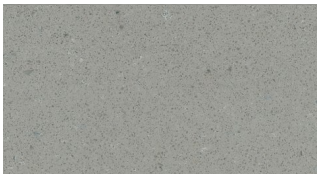

QS04 Caesarstone, Raw Concrete

QS03 Caesarstone, Sleek Concrete

Paint: High Gloss Polyester + Satin Lacquer

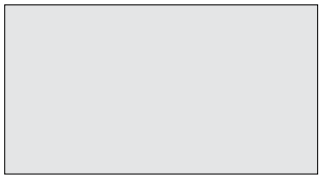

HG01 / SL01 White

HG02 / SL02 Light Beige

HG10 / SL10 Yellow Finch

HG11 / SL11 Jack O Lantern

HG03 / SL03 Sand

HG04 / SL04 Taupe

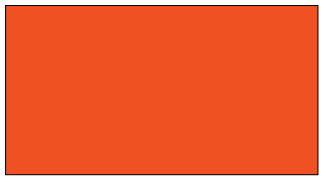

HG12 / SL12 Racing Orange

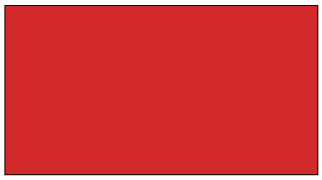

HG20 / SL20 Red

HG05 / SL05 Light Brown

HG06 / SL06 Light Grey

HG09 / SL09 Black Brown

HG13 / SL13 Jet Black

HG07 / SL07 Quartz Grey

HG08 / SL08 Umbra Grey

Metal: Powder Coat

MC01 White

MC02 Light Grey

MC03 Quartz Grey

MC04 Umbra Grey

MC05 Black Brown

MC11 Jet Black

MC20 Red

Metal: Powder Coat Metallic

MC06 Silver

MC08 Gun Metal

MC09 Bronze

MC12 Black

MC13 Warm Grey

MC14 Soft White

Metal: Premium

PM01 Polished Chrome

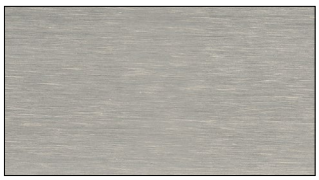

PM02 Satin Nickel

PM03 Oil Rubbed Bronze

Leather: Spinneybeck-Acqua

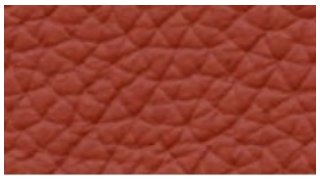

AU 0625 Strait Dover

AU 0635 Long Island Sound

AU 0614 River Thames

AU 0659 Blue Marlin

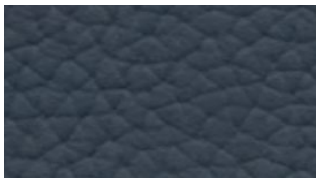

AU 0631 Cantabrian Sea

AU 0623 Jewelfish

AU 0647 Straits of Gibraltar

AU 0608 Botany Bay

AU 0607 Lake Como

AU 0604 Del Mar

AU 0610 North Sea

AU 0605 Tahiti

AU 0639 Aquitania

AU 0642 Longship

AU 0617 Black Sea

AU 0646 Sea Wolf

PRODUCT MAINTENANCE

Regular dusting with a soft cloth will help prevent fine dust particles from becoming embedded in the finished surface. We recommend using a soft flannel cloth slightly dampened with water, followed by a dry cloth. Always wipe in the direction of the grain. Caution: Never use a chemically treated cleaning cloth.

For removing residues, smudges, etc., we recommend using a very mild (non-ammonia) soap and water solution. Apply with a soft flannel cloth, followed by a dry cloth. Always wipe in the direction of the grain.

Most stone and metal surfaces can be cleaned by following the same steps we recommend for our wood products. Granite and marble are both very porous and stain very easily. Lemon juice and other acids can etch the surface of the stone. Many stains are extremely difficult or impossible to remove, so please be careful. If a problem arises, please contact DatesWeiser for recommendations.

Glass can be cleaned with a standard brand of glass cleaner that does not contain ammonia or vinegar. Always use a soft, clean, grit-free cloth to reduce the risk of scratching the surface. We recommend a micro-fiber cloth and not paper towels. Care and cleaning of clear and acid-etched glass is the same. On non-tempered glass avoid extremely hot materials and on all glass avoid caustic substances.

We recommend using felt pads on all objects that come in contact with our furniture. Certain vinyl and rubber products can chemically react with the finish on wood if left in contact for extended periods of time. Coasters, place mats, notebook covers, and rubber or plastic feet (found on most accessories) can also damage wood surfaces. To avoid indentations caused by writing instruments, always use a non-vinyl blotter or writing pad.

All furniture should be used in a stable, controlled atmosphere and positioned to avoid direct sunlight. The ideal climate is 65 to 75 degrees Fahrenheit with 30 to 55% relative humidity.

Highline Collection

DATESWEISER

Highline Rectangular Conference Tables Index

42″–48″ width

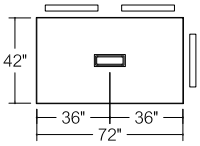

02R42X72
6 Person Table

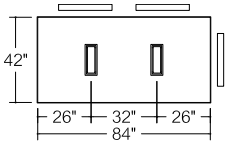

02R42X84
6 Person Table

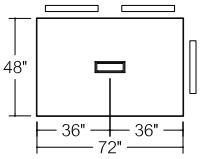

02R48X72
6 Person Table

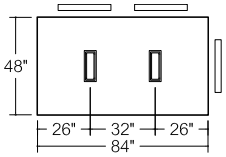

02R48X84
6 Person Table

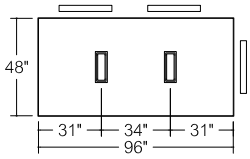

02R48X96
6 - 8 Person Table

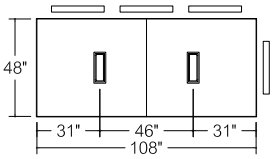

02R48X108
8 Person Table

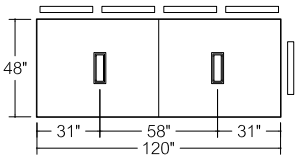

02R48X120
10 Person Table

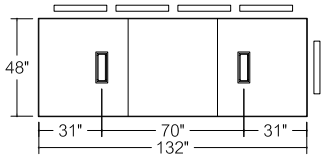

02R48X132
10 Person Table

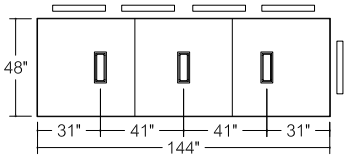

02R48X144
10 Person Table

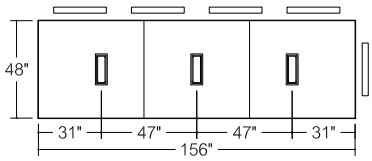

02R48X156
10 - 12 Person Table

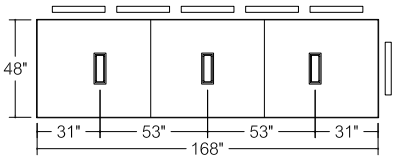

02R48X168
12 Person Table

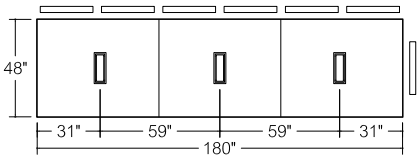

02R48X180
14 Person Table

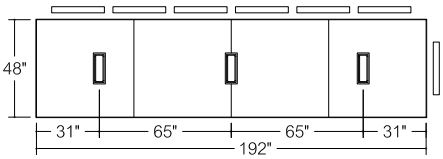

02R48X192
14 Person Table

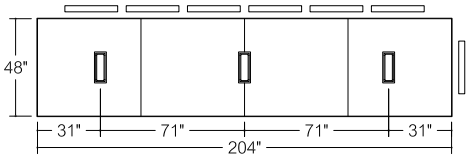

02R48X204
14 Person Table

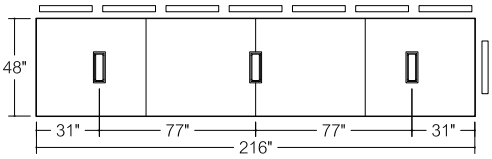

02R48X216
16 Person Table

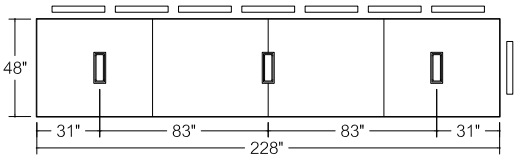

02R48X228
16 Person Table

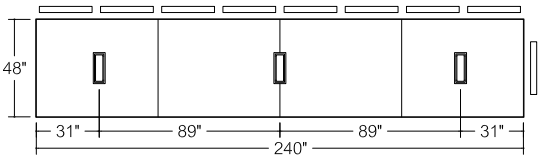

02R48X240
18 Person Table

Highline Rectangular Conference Table

42”x72”/ 6 Person
02R42X72

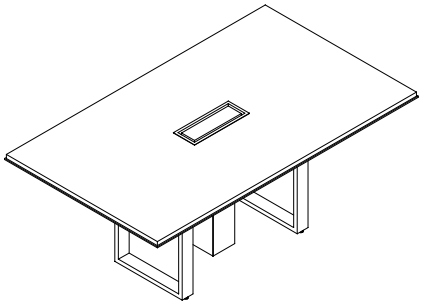

Starting Price: $8,961

42x72 table, veneer Tier 1 top with metal edge, open base, powder coat metal finish

Pattern Number: 02R42X72

Step 1. Top Material	
V	Veneer
G	Glass
C	Corian
Q	Caesarstone

Step 2. Edge Selection/Finish		
AU_ _	Spinneybeck Leather: Acqua	+1,634
MC _ _	Powder Coat	+0
PM01	Polished Chrome	+1,099
PM02	Satin Nickel	+323
PM03	Oil Rubbed Bronze	+734

Step 3. Base Type		
BL	Base Loop	+0

Step 4. Top Finish		
T1 _ _	Veneer Tier 1	+0
T2 _ _	Veneer Tier 2	+483
GC _ _	Clear Glass, back painted	+2,079
GE _ _	Etched matte Glass, back painted	+2,499
CS01	Corian Glacier White	+3,045
QS _ _	Caesarstone	+8,353

Step 5. Base Finish		
MC _ _	Powder Coat	+0
PM01	Polished Chrome	+1,099
PM02	Satin Nickel	+323
PM03	Oil Rubbed Bronze	+734

Step 6. Microphone and/or Grommet Accommodations: Optional		
MA _ _	Microphone hole (factory cut)	Qty_ _ x 321 each
GM _ _	2” Grommet Hole (factory cut), liner, lid, in matching metal finish	Qty_ _ x 423 each

Step 7. Power & Connectivity Access: Optional		
TMHW	Tabletop, Metal lid, Hardwired, Qty 1	+3,746
TMPI	Tabletop, Metal lid, Plug In, Qty 1	+3,191
UMHW	Undermount, Hardwired, Qty 4	+4,076
UMPI	Undermount, Plug In, Qty 4	+2,964

Wire Management Column (sold separately)

Required with any technology selection	
Pattern Number: 02WMC6X6	227
Pattern Number: 02WMC10X10	885

Step 1. Metal Finish for Wire Management Column		6x6	10x10
MC _ _	Powder Coat	+0	+0
PM01	Polished Chrome	+1,065	+485
PM02	Satin Nickel	+1,065	+485
PM03	Oil Rubbed Bronze	+1,595	+2,220

Please consult **page 7** for the palette of DatesWeiser finishes. Natural stone, non-standard glass and veneer, and other technology options are available. Please email **customerservice@datesweiser.com** for a custom quote. Consult technical information on **page 274** for construction details and technical information.

Highline Rectangular Conference Table

42”x84”/ 6 Person
02R42X84

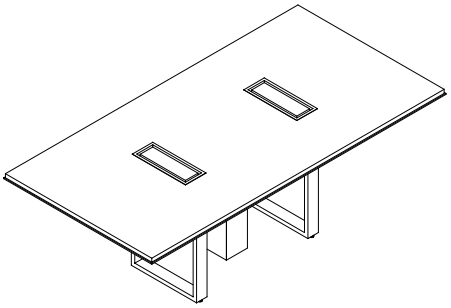

Starting Price: $9,597

42x84 table, veneer Tier 1 top with metal edge, open base, powder coat metal finish

Pattern Number: 02R42X84

Step 1. Top Material	
V	Veneer
G	Glass
C	Corian
Q	Caesarstone

Step 2. Edge Selection/Finish		
AU_ _	Spinneybeck Leather: Acqua	+1,806
MC _ _	Powder Coat	+0
PM01	Polished Chrome	+1,099
PM02	Satin Nickel	+323
PM03	Oil Rubbed Bronze	+734

Step 3. Base Type		
BL	Base Loop	+0

Step 4. Top Finish		
T1 _ _	Veneer Tier 1	+0
T2 _ _	Veneer Tier 2	+563
GC _ _	Clear Glass, back painted	+2,425
GE _ _	Etched matte Glass, back painted	+2,916
CS01	Corian Glacier White	+3,553
QS _ _	Caesarstone	+9,188

Step 5. Base Finish		
MC _ _	Powder Coat	+0
PM01	Polished Chrome	+1,099
PM02	Satin Nickel	+323
PM03	Oil Rubbed Bronze	+734

Step 6. Microphone and/or Grommet Accommodations: Optional		
MA _ _	Microphone hole (factory cut)	Qty _ _ x 321 each
GM _ _	2” Grommet Hole (factory cut), liner, lid, in matching metal finish	Qty _ _ x 423 each

Step 7. Power & Connectivity Access: Optional		
TMHW	Tabletop, Metal lid, Hardwired, Qty 2	+7,492
TMPI	Tabletop, Metal lid, Plug In, Qty 2	+6,382
UMHW	Undermount, Hardwired, Qty 4	+4,076
UMPI	Undermount, Plug In, Qty 4	+2,964

Wire Management Column (sold separately)

Required with any technology selection	
Pattern Number: 02WMC6X6	227
Pattern Number: 02WMC10X10	885

Step 1. Metal Finish for Wire Management Column		6x6	10x10
MC _ _	Powder Coat	+0	+0
PM01	Polished Chrome	+1,065	+485
PM02	Satin Nickel	+1,065	+485
PM03	Oil Rubbed Bronze	+1,595	+2,220

Please consult **page 7** for the palette of DatesWeiser finishes. Natural stone, non-standard glass and veneer, and other technology options are available. Please email **customerservice@datesweiser.com** for a custom quote. Consult technical information on **page 274** for construction details and technical information.

Highline Rectangular Conference Table

48”x72”/ 6 Person
02R48X72

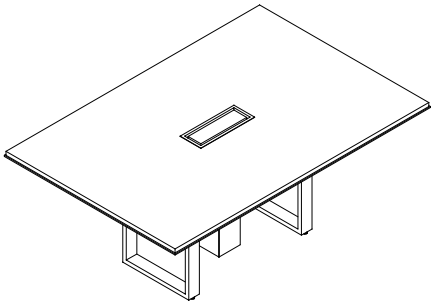

Starting Price: $9,293

48x72 table, veneer Tier 1 top with metal edge, open base, powder coat metal finish

Pattern Number: 02R48X72

Step 1. Top Material	
V	Veneer
G	Glass
C	Corian
Q	Caesarstone

Step 2. Edge Selection/Finish		
AU_ _	Spinneybeck Leather: Acqua	+1,720
MC _ _	Powder Coat	+0
PM01	Polished Chrome	+1,099
PM02	Satin Nickel	+323
PM03	Oil Rubbed Bronze	+734

Step 3. Base Type		
BL	Base Loop	+0

Step 4. Top Finish		
T1 _ _	Veneer Tier 1	+0
T2 _ _	Veneer Tier 2	+552
GC _ _	Clear Glass, back painted	+2,376
GE _ _	Etched matte Glass, back painted	+2,856
CS01	Corian Glacier White	+3,480
QS _ _	Caesarstone	+9,000

Step 5. Base Finish		
MC _ _	Powder Coat	+0
PM01	Polished Chrome	+1,099
PM02	Satin Nickel	+323
PM03	Oil Rubbed Bronze	+734

Step 6. Microphone and/or Grommet Accommodations: Optional		
MA _ _	Microphone hole (factory cut)	Qty_ _ x 321 each
GM _ _	2” Grommet Hole (factory cut), liner, lid, in matching metal finish	Qty_ _ x 423 each

Step 7. Power & Connectivity Access: Optional		
TMHW	Tabletop, Metal lid, Hardwired, Qty 1	+3,746
TMPI	Tabletop, Metal lid, Plug In, Qty 1	+3,191
UMHW	Undermount, Hardwired, Qty 4	+4,076
UMPI	Undermount, Plug In, Qty 4	+2,964

Wire Management Column (sold separately)

Required with any technology selection	
Pattern Number: 02WMC6X6	227
Pattern Number: 02WMC10X10	885

Step 1. Metal Finish for Wire Management Column		6x6	10x10
MC _ _	Powder Coat	+0	+0
PM01	Polished Chrome	+1,065	+485
PM02	Satin Nickel	+1,065	+485
PM03	Oil Rubbed Bronze	+1,595	+2,220

Please consult **page 7** for the palette of DatesWeiser finishes. Natural stone, non-standard glass and veneer, and other technology options are available. Please email **customerservice@datesweiser.com** for a custom quote. Consult technical information on **page 274** for construction details and technical information.

Highline Rectangular Conference Table

48”x84”/ 6 Person
02R48X84

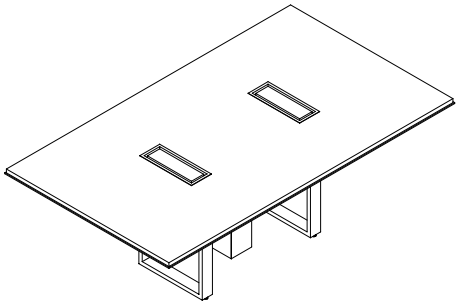

Starting Price: $9,996

48x84 table, veneer Tier 1 top with metal edge, open base, powder coat metal finish

Pattern Number: 02R48X84

Step 1. Top Material	
V	Veneer
G	Glass
C	Corian
Q	Caesarstone

Step 2. Edge Selection/Finish		
AU_ _	Spinneybeck Leather: Acqua	+1,892
MC _ _	Powder Coat	+0
PM01	Polished Chrome	+1,099
PM02	Satin Nickel	+323
PM03	Oil Rubbed Bronze	+734

Step 3. Base Type		
BL	Base Loop	+0

Step 4. Top Finish		
T1 _ _	Veneer Tier 1	+0
T2 _ _	Veneer Tier 2	+644
GC _ _	Clear Glass, back painted	+2,772
GE _ _	Etched matte Glass, back painted	+3,332
CS01	Corian Glacier White	+4,060
QS _ _	Caesarstone	+10,500

Step 5. Base Finish		
MC _ _	Powder Coat	+0
PM01	Polished Chrome	+1,099
PM02	Satin Nickel	+323
PM03	Oil Rubbed Bronze	+734

Step 6. Microphone and/or Grommet Accommodations: Optional		
MA _ _	Microphone hole (factory cut)	Qty _ _ x 321 each
GM _ _	2” Grommet Hole (factory cut), liner, lid, in matching metal finish	Qty _ _ x 423 each

Step 7. Power & Connectivity Access: Optional		
TMHW	Tabletop, Metal lid, Hardwired, Qty 2	+7,492
TMPI	Tabletop, Metal lid, Plug In, Qty 2	+6,382
UMHW	Undermount, Hardwired, Qty 4	+4,076
UMPI	Undermount, Plug In, Qty 4	+2,964

Wire Management Column (sold separately)

Required with any technology selection	
Pattern Number: 02WMC6X6	227
Pattern Number: 02WMC10X10	885

Step 1. Metal Finish for Wire Management Column		6x6	10x10
MC _ _	Powder Coat	+0	+0
PM01	Polished Chrome	+1,065	+485
PM02	Satin Nickel	+1,065	+485
PM03	Oil Rubbed Bronze	+1,595	+2,220

Please consult **page 7** for the palette of DatesWeiser finishes. Natural stone, non-standard glass and veneer, and other technology options are available. Please email **customerservice@datesweiser.com** for a custom quote. Consult technical information on **page 274** for construction details and technical information.

Highline Rectangular Conference Table

48”x96”/ 6 - 8 Person
02R48X96

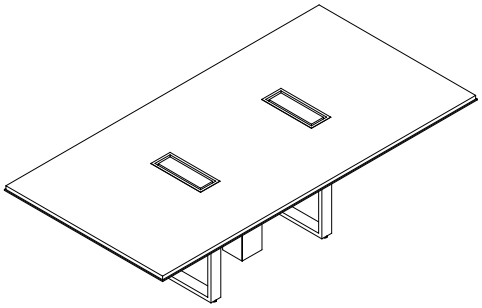

Starting Price: $10,410

48x96 table, veneer Tier 1 top with metal edge, open base, powder coat metal finish

Pattern Number: 02R48X96

Step 1. Top Material	
V	Veneer
G	Glass
C	Corian
Q	Caesarstone

Step 2. Edge Selection/Finish		
AU_ _	Spinneybeck Leather: Acqua	+2,064
MC _ _	Powder Coat	+0
PM01	Polished Chrome	+1,099
PM02	Satin Nickel	+323
PM03	Oil Rubbed Bronze	+734

Step 3. Base Type		
BL	Base Loop	+0

Step 4. Top Finish		
T1 _ _	Veneer Tier 1	+0
T2 _ _	Veneer Tier 2	+736
GC _ _	Clear Glass, back painted	+3,168
GE _ _	Etched matte Glass, back painted	+3,809
CS01	Corian Glacier White	+4,640
QS _ _	Caesarstone	+12,000

Step 5. Base Finish		
MC _ _	Powder Coat	+0
PM01	Polished Chrome	+1,099
PM02	Satin Nickel	+323
PM03	Oil Rubbed Bronze	+734

Step 6. Microphone and/or Grommet Accommodations: Optional		
MA _ _	Microphone hole (factory cut)	Qty_ _ x 321 each
GM _ _	2” Grommet Hole (factory cut), liner, lid, in matching metal finish	Qty_ _ x 423 each

Step 7. Power & Connectivity Access: Optional		
TMHW	Tabletop, Metal lid, Hardwired, Qty 2	+7,492
TMPI	Tabletop, Metal lid, Plug In, Qty 2	+6,382
UMHW	Undermount, Hardwired, Qty 4	+4,076
UMPI	Undermount, Plug In, Qty 4	+2,964

Wire Management Column (sold separately)

Required with any technology selection	
Pattern Number: 02WMC6X6	227
Pattern Number: 02WMC10X10	885

Step 1. Metal Finish for Wire Management Column		6x6	10x10
MC _ _	Powder Coat	+0	+0
PM01	Polished Chrome	+1,065	+485
PM02	Satin Nickel	+1,065	+485
PM03	Oil Rubbed Bronze	+1,595	+2,220

Please consult **page 7** for the palette of DatesWeiser finishes. Natural stone, non-standard glass and veneer, and other technology options are available. Please email **customerservice@datesweiser.com** for a custom quote. Consult technical information on **page 274** for construction details and technical information.

Highline Rectangular Conference Table

48”x108”/ 8 Person
02R48X108

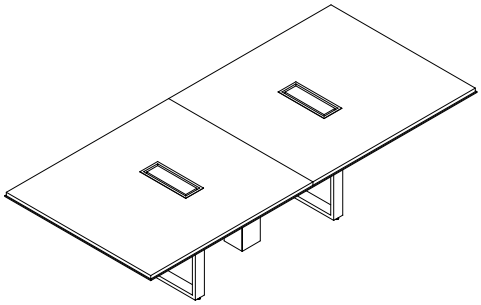

Starting Price: $11,282

48x108 table, veneer Tier 1 top with metal edge, open base, powder coat metal finish

Pattern Number: 02R48X108

Step 1. Top Material	
V	Veneer
G	Glass
C	Corian
Q	Caesarstone

Step 2. Edge Selection/Finish		
AU_ _	Spinneybeck Leather: Acqua	+2,236
MC _ _	Powder Coat	+0
PM01	Polished Chrome	+1,099
PM02	Satin Nickel	+323
PM03	Oil Rubbed Bronze	+734

Step 3. Base Type		
BL	Base Loop	+0

Step 4. Top Finish		
T1 _ _	Veneer Tier 1	+0
T2 _ _	Veneer Tier 2	+828
GC _ _	Clear Glass, back painted	+3,564
GE _ _	Etched matte Glass, back painted	+4,284
CS01	Corian Glacier White	+5,220
QS _ _	Caesarstone	+13,500

Step 5. Base Finish		
MC _ _	Powder Coat	+0
PM01	Polished Chrome	+1,099
PM02	Satin Nickel	+323
PM03	Oil Rubbed Bronze	+734

Step 6. Microphone and/or Grommet Accommodations: Optional		
MA _ _	Microphone hole (factory cut)	Qty_ _ x 321 each
GM _ _	2” Grommet Hole (factory cut), liner, lid, in matching metal finish	Qty_ _ x 423 each

Step 7. Power & Connectivity Access: Optional		
TMHW	Tabletop, Metal lid, Hardwired, Qty 2	+7,492
TMPI	Tabletop, Metal lid, Plug In, Qty 2	+6,382
UMHW	Undermount, Hardwired, Qty 4	+4,076
UMPI	Undermount, Plug In, Qty 4	+2,964

Wire Management Column (sold separately)

Required with any technology selection	
Pattern Number: 02WMC6X6	227
Pattern Number: 02WMC10X10	885

Step 1. Metal Finish for Wire Management Column		6x6	10x10
MC _ _	Powder Coat	+0	+0
PM01	Polished Chrome	+1,065	+485
PM02	Satin Nickel	+1,065	+485
PM03	Oil Rubbed Bronze	+1,595	+2,220

Please consult **page 7** for the palette of DatesWeiser finishes. Natural stone, non-standard glass and veneer, and other technology options are available. Please email **customerservice@datesweiser.com** for a custom quote. Consult technical information on **page 274** for construction details and technical information.

Highline Rectangular Conference Table

48”x120”/ 10 Person
02R48X120

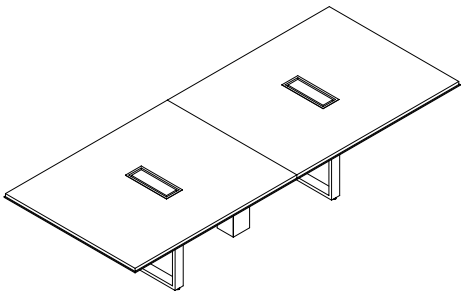

Starting Price: $12,158

48x120 table, veneer Tier 1 top with metal edge, open base, powder coat metal finish

Pattern Number: 02R48X120

Step 1. Top Material	
V	Veneer
G	Glass
C	Corian
Q	Caesarstone

Step 2. Edge Selection/Finish		
AU_ _	Spinneybeck Leather: Acqua	+2,408
MC _ _	Powder Coat	+0
PM01	Polished Chrome	+1,099
PM02	Satin Nickel	+323
PM03	Oil Rubbed Bronze	+734

Step 3. Base Type		
BL	Base Loop	+0

Step 4. Top Finish		
T1 _ _	Veneer Tier 1	+0
T2 _ _	Veneer Tier 2	+920
GC _ _	Clear Glass, back painted	+3,960
GE _ _	Etched matte Glass, back painted	+4,760
CS01	Corian Glacier White	+5,800
QS _ _	Caesarstone	+15,000

Step 5. Base Finish		
MC _ _	Powder Coat	+0
PM01	Polished Chrome	+1,099
PM02	Satin Nickel	+323
PM03	Oil Rubbed Bronze	+734

Step 6. Microphone and/or Grommet Accommodations: Optional		
MA _ _	Microphone hole (factory cut)	Qty_ _ x 321 each
GM _ _	2” Grommet Hole (factory cut), liner, lid, in matching metal finish	Qty_ _ x 423 each

Step 7. Power & Connectivity Access: Optional		
TMHW	Tabletop, Metal lid, Hardwired, Qty 2	+7,492
TMPI	Tabletop, Metal lid, Plug In, Qty 2	+6,382
UMHW	Undermount, Hardwired, Qty 6	+6,114
UMPI	Undermount, Plug In, Qty 6	+4,446

Wire Management Column (sold separately)

Required with any technology selection	
Pattern Number: 02WMC6X6	227
Pattern Number: 02WMC10X10	885

Step 1. Metal Finish for Wire Management Column		6x6	10x10
MC _ _	Powder Coat	+0	+0
PM01	Polished Chrome	+1,065	+485
PM02	Satin Nickel	+1,065	+485
PM03	Oil Rubbed Bronze	+1,595	+2,220

Please consult **page 7** for the palette of DatesWeiser finishes. Natural stone, non-standard glass and veneer, and other technology options are available. Please email **customerservice@datesweiser.com** for a custom quote. Consult technical information on **page 274** for construction details and technical information.

Highline Rectangular Conference Table

48”x132”/ 10 Person
02R48X132

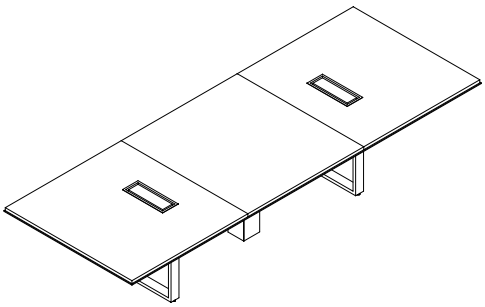

Starting Price: $14,907

48x132 table, veneer Tier 1 top with metal edge, open base, powder coat metal finish

Pattern Number: 02R48X132

Step 1. Top Material	
V	Veneer
G	Glass
C	Corian
Q	Caesarstone

Step 2. Edge Selection/ Finish		
AU_ _	Spinneybeck Leather: Acqua	+2,580
MC _ _	Powder Coat	+0
PM01	Polished Chrome	+1,256
PM02	Satin Nickel	+485
PM03	Oil Rubbed Bronze	+947

Step 3. Base Type		
BL	Base Loop	+0

Step 4. Top Finish		
T1 _ _	Veneer Tier 1	+0
T2 _ _	Veneer Tier 2	+1,012
GC _ _	Clear Glass, back painted	+4,356
GE _ _	Etched matte Glass, back painted	+5,236
CS01	Corian Glacier White	+6,380
QS _ _	Caesarstone	+16,500

Step 5. Base Finish		
MC _ _	Powder Coat	+0
PM01	Polished Chrome	+1,099
PM02	Satin Nickel	+323
PM03	Oil Rubbed Bronze	+734

Step6. Microphone and/or Grommet Accommodations: Optional		
MA _ _	Microphone hole (factory cut)	Qty_ _ x 321 each
GM _ _	2” Grommet Hole (factory cut), liner, lid, in matching metal finish	Qty_ _ x 423 each

Step 7. Power & Connectivity Access: Optional		
TMHW	Tabletop, Metal lid, Hardwired, Qty 2	+7,492
TMPI	Tabletop, Metal lid, Plug In, Qty 2	+6,382
UMHW	Undermount, Hardwired, Qty 6	+6,114
UMPI	Undermount, Plug In, Qty 6	+4,446

Wire Management Column (sold separately)

Required with any technology selection

Pattern Number: 02WMC6X6	227
Pattern Number: 02WMC10X10	885

Step 1. Metal Finish for Wire Management Column		6x6	10x10
MC _ _	Powder Coat	+0	+0
PM01	Polished Chrome	+1,065	+485
PM02	Satin Nickel	+1,065	+485
PM03	Oil Rubbed Bronze	+1,595	+2,220

Please consult **page 7** for the palette of DatesWeiser finishes. Natural stone, non-standard glass and veneer, and other technology options are available. Please email **customerservice@datesweiser.com** for a custom quote. Consult technical information on **page 274** for construction details and technical information.

Highline Rectangular Conference Table

48”x144”/ 10 Person
02R48X144BL

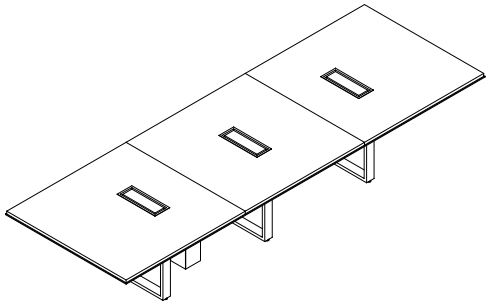

Starting Price: $15,687

48x144 table, veneer Tier 1 top with metal edge, open base, powder coat metal finish

Pattern Number: 02R48X144

Step 1. Top Material	
V	Veneer
G	Glass
C	Corian
Q	Caesarstone

Step 2. Edge Selection/Finish		
AU_ _	Spinneybeck Leather: Acqua	+2,752
MC _ _	Powder Coat	+0
PM01	Polished Chrome	+1,256
PM02	Satin Nickel	+485
PM03	Oil Rubbed Bronze	+947

Step 3. Base Type		
BL	Base Loop	+0

Step 4. Top Finish		
T1 _ _	Veneer Tier 1	+0
T2 _ _	Veneer Tier 2	+1,104
GC _ _	Clear Glass, back painted	+4,752
GE _ _	Etched matte Glass, back painted	+5,712
CS01	Corian Glacier White	+6,960
QS _ _	Caesarstone	+18,000

Step 5. Base Finish		
MC _ _	Powder Coat	+0
PM01	Polished Chrome	+1,256
PM02	Satin Nickel	+485
PM03	Oil Rubbed Bronze	+947

Step 6. Microphone and/or Grommet Accommodations: Optional		
MA _ _	Microphone hole (factory cut)	Qty _ _ x 321 each
GM _ _	2” Grommet Hole (factory cut), liner, lid, in matching metal finish	Qty _ _ x 423 each

Step 7. Power & Connectivity Access: Optional		
TMHW	Tabletop, Metal lid, Hardwired, Qty 3	+11,238
TMPI	Tabletop, Metal lid, Plug In, Qty 3	+9,573
UMHW	Undermount, Hardwired, Qty 6	+6,114
UMPI	Undermount, Plug In, Qty 6	+4,446

Wire Management Column (sold separately)

Required with any technology selection

Pattern Number: 02WMC6X6	227
Pattern Number: 02WMC10X10	885

Step 1. Metal Finish for Wire Management Column		6x6	10x10
MC _ _	Powder Coat	+0	+0
PM01	Polished Chrome	+1,065	+485
PM02	Satin Nickel	+1,065	+485
PM03	Oil Rubbed Bronze	+1,595	+2,220

Please consult **page 7** for the palette of DatesWeiser finishes. Natural stone, non-standard glass and veneer, and other technology options are available. Please email **customerservice@datesweiser.com** for a custom quote. Consult technical information on **page 274** for construction details and technical information.

Highline Rectangular Conference Table

48”x156”/ 10 - 12 Person
02R48X156

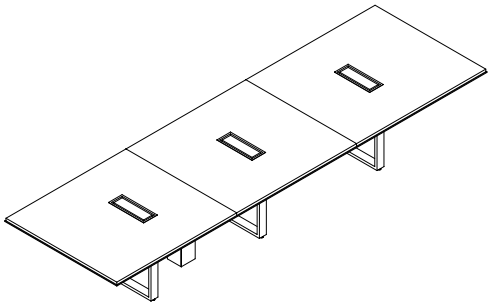

Starting Price: $16,291

48x156 table, veneer Tier 1 top with metal edge, open base, powder coat metal finish

Pattern Number: 02R48X156

Step 1. Top Material	
V	Veneer
G	Glass
C	Corian
Q	Caesarstone

Step 2. Edge Selection/Finish		
AU_ _	Spinneybeck Leather: Acqua	+2,924
MC _ _	Powder Coat	+0
PM01	Polished Chrome	+1,256
PM02	Satin Nickel	+485
PM03	Oil Rubbed Bronze	+947

Step 3. Base Type		
BL	Base Loop	+0

Step 4. Top Finish		
T1 _ _	Veneer Tier 1	+0
T2 _ _	Veneer Tier 2	+1,196
GC _ _	Clear Glass, back painted	+5,148
GE _ _	Etched matte Glass, back painted	+6,188
CS01	Corian Glacier White	+7,540
QS _ _	Caesarstone	+19,500

Step 5. Base Finish		
MC _ _	Powder Coat	+0
PM01	Polished Chrome	+1,256
PM02	Satin Nickel	+485
PM03	Oil Rubbed Bronze	+947

Step 6. Microphone and/or Grommet Accommodations: Optional		
MA _ _	Microphone hole (factory cut)	Qty _ _ x 321 each
GM _ _	2” Grommet Hole (factory cut), liner, lid, in matching metal finish	Qty _ _ x 423 each

Step 7. Power & Connectivity Access: Optional		
TMHW	Tabletop, Metal lid, Hardwired, Qty 3	+11,238
TMPI	Tabletop, Metal lid, Plug In, Qty 3	+9,573
UMHW	Undermount, Hardwired, Qty 6	+6,114
UMPI	Undermount, Plug In, Qty 6	+4,446

Wire Management Column (sold separately)

Required with any technology selection	
Pattern Number: 02WMC6X6	227
Pattern Number: 02WMC10X10	885

Step 1. Metal Finish for Wire Management Column		6x6	10x10
MC _ _	Powder Coat	+0	+0
PM01	Polished Chrome	+1,056	+485
PM02	Satin Nickel	+1,056	+485
PM03	Oil Rubbed Bronze	+1,595	+2,220

Please consult **page 7** for the palette of DatesWeiser finishes. Natural stone, non-standard glass and veneer, and other technology options are available. Please email **customerservice@datesweiser.com** for a custom quote. Consult technical information on **page 274** for construction details and technical information.

Highline Rectangular Conference Table

48”x168”/ 12 Person
02R48X168

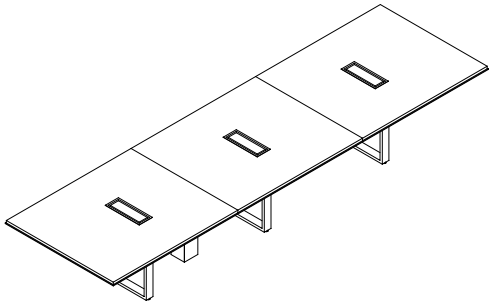

Starting Price: $17,260

48x168 table, veneer Tier 1 top with metal edge, open base, powder coat metal finish

Pattern Number: 02R48X168

Step 1. Top Material	
V	Veneer
G	Glass
C	Corian
Q	Caesarstone

Step 2. Edge Selection/Finish		
AU_ _	Spinneybeck Leather: Acqua	+3,096
MC _ _	Powder Coat	+0
PM01	Polished Chrome	+1,886
PM02	Satin Nickel	+486
PM03	Oil Rubbed Bronze	+1,153

Step 3. Base Type		
BL	Base Loop	+0

Step 4. Top Finish		
T1 _ _	Veneer Tier 1	+0
T2 _ _	Veneer Tier 2	+1,288
GC _ _	Clear Glass, back painted	+5,544
GE _ _	Etched matte Glass, back painted	+6,664
CS01	Corian Glacier White	+8,120
QS _ _	Caesarstone	+21,000

Step 5. Base Finish		
MC _ _	Powder Coat	+0
PM01	Polished Chrome	+1,886
PM02	Satin Nickel	+486
PM03	Oil Rubbed Bronze	+1,153

Step 6. Microphone and/or Grommet Accommodations: Optional		
MA _ _	Microphone hole (factory cut)	Qty _ _ x 321 each
GM _ _	2” Grommet Hole (factory cut), liner, lid, in matching metal finish	Qty _ _ x 423 each

Step 7. Power & Connectivity Access: Optional		
TMHW	Tabletop, Metal lid, Hardwired, Qty 3	+11,238
TMPI	Tabletop, Metal lid, Plug In, Qty 3	+9,573
UMHW	Undermount, Hardwired, Qty 6	+6,114
UMPI	Undermount, Plug In, Qty 6	+4,446

Wire Management Column (sold separately)

Required with any technology selection	
Pattern Number: 02WMC6X6	227
Pattern Number: 02WMC10X10	885

Step 1. Metal Finish for Wire Management Column		6x6	10x10
MC _ _	Powder Coat	+0	+0
PM01	Polished Chrome	+1,065	+485
PM02	Satin Nickel	+1,065	+485
PM03	Oil Rubbed Bronze	+1,595	+2,220

Please consult **page 7** for the palette of DatesWeiser finishes. Natural stone, non-standard glass and veneer, and other technology options are available. Please email **customerservice@datesweiser.com** for a custom quote. Consult technical information on **page 274** for construction details and technical information.

Highline Rectangular Conference Table

48”x180”/ 14 Person
02R48X180

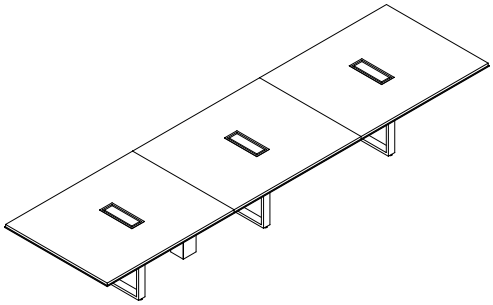

Starting Price: $17,963

48x180 table, veneer Tier 1 top with metal edge, open base, powder coat metal finish

Pattern Number: 02R48X180

Step 1. Top Material	
V	Veneer
G	Glass
C	Corian
Q	Caesarstone

Step 2. Edge Selection/Finish		
AU_ _	Spinneybeck Leather: Acqua	+3,268
MC _ _	Powder Coat	+0
PM01	Polished Chrome	+1,866
PM02	Satin Nickel	+486
PM03	Oil Rubbed Bronze	+1,153

Step 3. Base Type		
BL	Base Loop	+0

Step 4. Top Finish		
T1 _ _	Veneer Tier 1	+0
T2 _ _	Veneer Tier 2	+1,110
GC _ _	Clear Glass, back painted	+5,940
GE _ _	Etched matte Glass, back painted	+7,140
CS01	Corian Glacier White	+8,700
QS _ _	Caesarstone	+22,500

Step 5. Base Finish		
MC _ _	Powder Coat	+0
PM01	Polished Chrome	+1,886
PM02	Satin Nickel	+486
PM03	Oil Rubbed Bronze	+1,153

Step 6. Microphone and/or Grommet Accommodations: Optional		
MA _ _	Microphone hole (factory cut)	Qty _ _ x 321 each
GM _ _	2” Grommet Hole (factory cut), liner, lid, in matching metal finish	Qty _ _ x 423 each

Step 7. Power & Connectivity Access: Optional		
TMHW	Tabletop, Metal lid, Hardwired, Qty 3	+11,238
TMPI	Tabletop, Metal lid, Plug In, Qty 3	+9,573
UMHW	Undermount, Hardwired, Qty 8	+8,152
UMPI	Undermount, Plug In, Qty 8	+5,928

Wire Management Column (sold separately)

Required with any technology selection	
Pattern Number: 02WMC6X6	227
Pattern Number: 02WMC10X10	885

Step 1. Metal Finish for Wire Management Column		6x6	10x10
MC _ _	Powder Coat	+0	+0
PM01	Polished Chrome	+1,056	+485
PM02	Satin Nickel	+1,056	+485
PM03	Oil Rubbed Bronze	+1,595	+2,220

Please consult **page 7** for the palette of DatesWeiser finishes. Natural stone, non-standard glass and veneer, and other technology options are available. Please email **customerservice@datesweiser.com** for a custom quote. Consult technical information on **page 274** for construction details and technical information.

Highline Rectangular Conference Table

48”x192”/ 14 Person
02R48X192

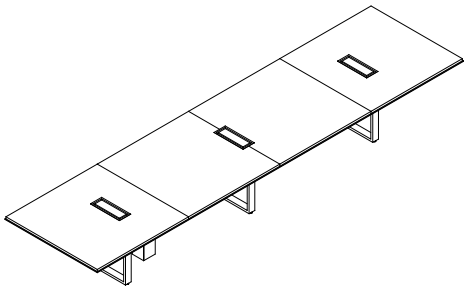

Starting Price: $18,723

48x192 table, veneer Tier 1 top with metal edge, open base, powder coat metal finish

Pattern Number: 02R48X192

Step 1. Top Material	
V	Veneer
G	Glass
C	Corian
Q	Caesarstone

Step 2. Edge Selection/Finish		
AU_ _	Spinneybeck Leather: Acqua	+3,440
MC _ _	Powder Coat	+0
PM01	Polished Chrome	+1,886
PM02	Satin Nickel	+486
PM03	Oil Rubbed Bronze	+1,153

Step 3. Base Type		
BL	Base Loop	+0

Step 4. Top Finish		
T1 _ _	Veneer Tier 1	+0
T2 _ _	Veneer Tier 2	+1,472
GC _ _	Clear Glass, back painted	+6,336
GE _ _	Etched matte Glass, back painted	+7,616
CS01	Corian Glacier White	+9,280
QS _ _	Caesarstone	+24,000

Step 2. Base Finish		
MC _ _	Powder Coat	+0
PM01	Polished Chrome	+1,886
PM02	Satin Nickel	+486
PM03	Oil Rubbed Bronze	+1,153

Step 6. Microphone and/or Grommet Accommodations: Optional		
MA _ _	Microphone hole (factory cut)	Qty _ _ x 321 each
GM _ _	2” Grommet Hole (factory cut), liner, lid, in matching metal finish	Qty _ _ x 423 each

Step 7. Power & Connectivity Access: Optional		
TMHW	Tabletop, Metal lid, Hardwired, Qty 3	+11,238
TMPI	Tabletop, Metal lid, Plug In, Qty 3	+9,573
UMHW	Undermount, Hardwired, Qty 8	+8,152
UMPI	Undermount, Plug In, Qty 8	+5,928

Wire Management Column (sold separately)

Required with any technology selection	
Pattern Number: 02WMC6X6	227
Pattern Number: 02WMC10X10	885

Step 1. Metal Finish for Wire Management Column		6x6	10x10
MC _ _	Powder Coat	+0	+0
PM01	Polished Chrome	+1,056	+485
PM02	Satin Nickel	+1,056	+485
PM03	Oil Rubbed Bronze	+1,595	+2,220

Please consult **page 7** for the palette of DatesWeiser finishes. Natural stone, non-standard glass and veneer, and other technology options are available. Please email **customerservice@datesweiser.com** for a custom quote. Consult technical information on **page 274** for construction details and technical information.

Highline Rectangular Conference Table

48”x204”/ 14 Person
02R48X204

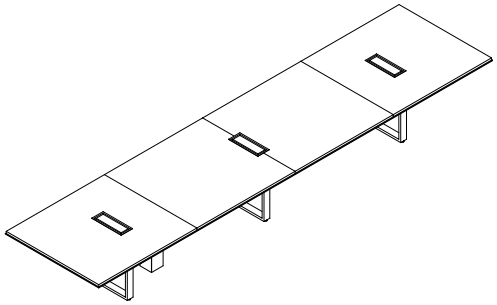

Starting Price: $19,679

48x204 table, veneer Tier 1 top with metal edge, open base, powder coat metal finish

Pattern Number: 02R48X204

Step 1. Top Material	
V	Veneer
G	Glass
C	Corian
Q	Caesarstone

Step 2. Edge Selection/Finish		
AU_ _	Spinneybeck Leather: Acqua	+3,612
MC _ _	Powder Coat	+0
PM01	Polished Chrome	+1,886
PM02	Satin Nickel	+486
PM03	Oil Rubbed Bronze	+1,153

Step 3. Base Type		
BL	Base Loop	+0

Step 4. Top Finish		
T1 _ _	Veneer Tier 1	+0
T2 _ _	Veneer Tier 2	+1,564
GC _ _	Clear Glass, back painted	+6,732
GE _ _	Etched matte Glass, back painted	+8,092
CS01	Corian Glacier White	+9,860
QS _ _	Caesarstone	+25,500

Step 5. Base Finish		
MC _ _	Powder Coat	+0
PM01	Polished Chrome	+1,886
PM02	Satin Nickel	+486
PM03	Oil Rubbed Bronze	+1,153

Step 6. Microphone and/or Grommet Accommodations: Optional		
MA _ _	Microphone hole (factory cut)	Qty _ _ x 321 each
GM _ _	2” Grommet Hole (factory cut), liner, lid, in matching metal finish	Qty _ _ x 423 each

Step 7. Power & Connectivity Access: Optional		
TMHW	Tabletop, Metal lid, Hardwired, Qty 3	+11,238
TMPI	Tabletop, Metal lid, Plug In, Qty 3	+9,573
UMHW	Undermount, Hardwired, Qty 8	+8,152
UMPI	Undermount, Plug In, Qty 8	+5,928

Wire Management Column (sold separately)

Required with any technology selection

Pattern Number: 02WMC6X6	227
Pattern Number: 02WMC10X10	885

Step 1. Metal Finish for Wire Management Column		6x6	10x10
MC _ _	Powder Coat	+0	+0
PM01	Polished Chrome	+1,065	+485
PM02	Satin Nickel	+1,065	+485
PM03	Oil Rubbed Bronze	+1,595	+2,220

Please consult **page 7** for the palette of DatesWeiser finishes. Natural stone, non-standard glass and veneer, and other technology options are available. Please email **customerservice@datesweiser.com** for a custom quote. Consult technical information on **page 274** for construction details and technical information.

Highline Rectangular Conference Table

48”x216”/ 16 Person
02R48X216

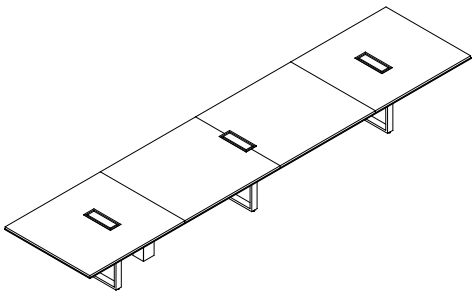

Starting Price: $20,161

48x216 table, veneer Tier 1 top with metal edge, open base, powder coat metal finish

Pattern Number: 02R48X216

Step 1. Top Material	
V	Veneer
G	Glass
C	Corian
Q	Caesarstone

Step 2. Edge Selection/Finish		
AU_ _	Spinneybeck Leather: Acqua	+3,784
MC _ _	Powder Coat	+0
PM01	Polished Chrome	+1,886
PM02	Satin Nickel	+486
PM03	Oil Rubbed Bronze	+1,153

Step 3. Base Type		
BL	Base Loop	+0

Step 4. Top Finish		
T1 _ _	Veneer Tier 1	+0
T2 _ _	Veneer Tier 2	+1,656
GC _ _	Clear Glass, back painted	+7,128
GE _ _	Etched matte Glass, back painted	+8,568
CS01	Corian Glacier White	+10,440
QS _ _	Caesarstone	+27,000

Step 5. Base Finish		
MC _ _	Powder Coat	+0
PM01	Polished Chrome	+1,886
PM02	Satin Nickel	+486
PM03	Oil Rubbed Bronze	+1,153

Step 6. Microphone and/or Grommet Accommodations: Optional		
MA _ _	Microphone hole (factory cut)	Qty _ _ x 321 each
GM _ _	2” Grommet Hole (factory cut), liner, lid, in matching metal finish	Qty _ _ x 423 each

Step 7. Power & Connectivity Access: Optional		
TMHW	Tabletop, Metal lid, Hardwired, Qty 3	+11,238
TMPI	Tabletop, Metal lid, Plug In, Qty 3	+9,573
UMHW	Undermount, Hardwired, Qty 8	+8,152
UMPI	Undermount, Plug In, Qty 8	+5,928

Wire Management Column (sold separately)

Required with any technology selection	
Pattern Number: 02WMC6X6	227
Pattern Number: 02WMC10X10	885

Step 1. Metal Finish for Wire Management Column		6x6	10x10
MC _ _	Powder Coat	+0	+0
PM01	Polished Chrome	+1,056	+485
PM02	Satin Nickel	+1,056	+485
PM03	Oil Rubbed Bronze	+1,595	+2,220

Please consult **page 7** for the palette of DatesWeiser finishes. Natural stone, non-standard glass and veneer, and other technology options are available. Please email **customerservice@datesweiser.com** for a custom quote. Consult technical information on **page 274** for construction details and technical information.

Highline Rectangular Conference Table

48”x228”/ 16 Person
02R48X228

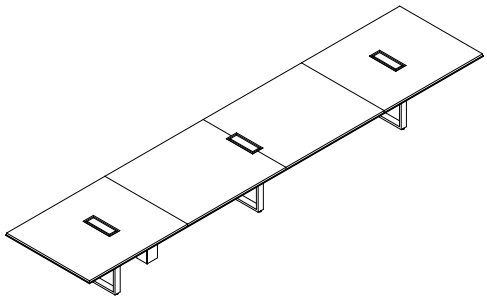

Starting Price: $20,866

48x228 table, veneer Tier 1 top with metal edge, open base, powder coat metal finish

Pattern Number: 02R48X228

Step 1. Top Material	
V	Veneer
G	Glass
C	Corian
Q	Caesarstone

Step 2. Edge Selection/Finish		
AU_ _	Spinneybeck Leather: Acqua	+3,986
MC _ _	Powder Coat	+0
PM01	Polished Chrome	+1,886
PM02	Satin Nickel	+486
PM03	Oil Rubbed Bronze	+1,153

Step 3. Base Type		
BL	Base Loop	+0

Step 4. Top Finish		
T1 _ _	Veneer Tier 1	+0
T2 _ _	Veneer Tier 2	+1,748
GC _ _	Clear Glass, back painted	+7,524
GE _ _	Etched matte Glass, back painted	+9,044
CS01	Corian Glacier White	+11,020
QS _ _	Caesarstone	+28,500

Step 5. Base Finish		
MC _ _	Powder Coat	+0
PM01	Polished Chrome	+1,886
PM02	Satin Nickel	+486
PM03	Oil Rubbed Bronze	+1,153

Step 6. Microphone and/or Grommet Accommodations: Optional		
MA _ _	Microphone hole (factory cut)	Qty _ _ x 321 each
GM _ _	2” Grommet Hole (factory cut), liner, lid, in matching metal finish	Qty _ _ x 423 each

Step 7. Power & Connectivity Access: Optional		
TMHW	Tabletop, Metal lid, Hardwired, Qty 3	+11,238
TMPI	Tabletop, Metal lid, Plug In, Qty 3	+9,573
UMHW	Undermount, Hardwired, Qty 8	+8,152
UMPI	Undermount, Plug In, Qty 8	+5,928

Wire Management Column (sold separately)

Required with any technology selection	
Pattern Number: 02WMC6X6	227
Pattern Number: 02WMC10X10	885

Step 1. Metal Finish for Wire Management Column		6x6	10x10
MC _ _	Powder Coat	+0	+0
PM01	Polished Chrome	+1,065	+485
PM02	Satin Nickel	+1,065	+485
PM03	Oil Rubbed Bronze	+1,595	+2,220

Please consult **page 7** for the palette of DatesWeiser finishes. Natural stone, non-standard glass and veneer, and other technology options are available. Please email **customerservice@datesweiser.com** for a custom quote. Consult technical information on **page 274** for construction details and technical information.

Highline Rectangular Conference Table

48”x240”/ 18 Person
02R48X240

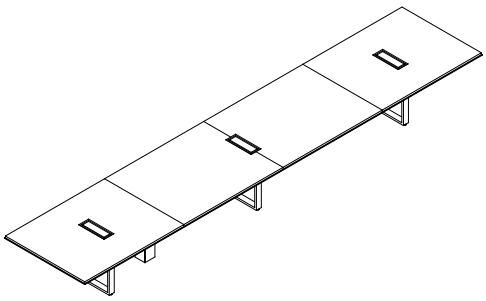

Starting Price: $21,585

48x240 table, veneer Tier 1 top with metal edge, open base, powder coat metal finish

Pattern Number: 02R48X240

Step 1. Top Material	
V	Veneer
G	Glass
C	Corian
Q	Caesarstone

Step 2. Edge Selection/Finish		
AU_ _	Spinneybeck Leather: Acqua	+4,128
MC _ _	Powder Coat	+0
PM01	Polished Chrome	+1,886
PM02	Satin Nickel	+486
PM03	Oil Rubbed Bronze	+1,153

Step 3. Base Type		
BL	Base Loop	+0

Step 4. Top Finish		
T1 _ _	Veneer Tier 1	+0
T2 _ _	Veneer Tier 2	+1,840
GC _ _	Clear Glass, back painted	+7,920
GE _ _	Etched matte Glass, back painted	+9,520
CS01	Corian Glacier White	+11,600
QS _ _	Caesarstone	+30,000

Step 5. Base Finish		
MC _ _	Powder Coat	+0
PM01	Polished Chrome	+1,886
PM02	Satin Nickel	+486
PM03	Oil Rubbed Bronze	+1,153

Step 6. Microphone and/or Grommet Accommodations: Optional		
MA _ _	Microphone hole (factory cut)	Qty _ _ x 321 each
GM _ _	2” Grommet Hole (factory cut), liner, lid, in matching metal finish	Qty _ _ x 423 each

Step 7. Power & Connectivity Access: Optional		
TMHW	Tabletop, Metal lid, Hardwired, Qty 3	+11,238
TMPI	Tabletop, Metal lid, Plug In, Qty 3	+9,573
UMHW	Undermount, Hardwired, Qty 10	+10,190
UMPI	Undermount, Plug In, Qty 10	+7,410

Wire Management Column (sold separately)

Required with any technology selection

Pattern Number: 02WMC6X6	227
Pattern Number: 02WMC10X10	885

Step 1. Metal Finish for Wire Management Column		6x6	10x10
MC _ _	Powder Coat	+0	+0
PM01	Polished Chrome	+1,065	+485
PM02	Satin Nickel	+1,065	+485
PM03	Oil Rubbed Bronze	+1,595	+2,220

Please consult **page 7** for the palette of DatesWeiser finishes. Natural stone, non-standard glass and veneer, and other technology options are available. Please email **customerservice@datesweiser.com** for a custom quote. Consult technical information on **page 274** for construction details and technical information.

Highline Rectangular Conference Tables Index

54″ width

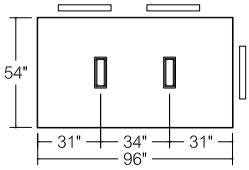

02R54X96
6 - 8 Person Table

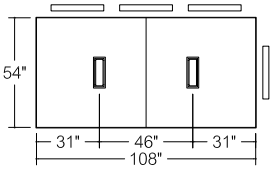

02R54X108
8 Person Table

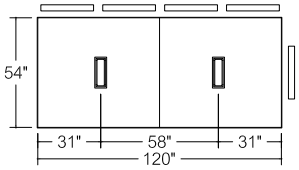

02R54X120
10 Person Table

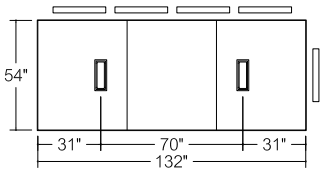

02R54X132
10 Person Table

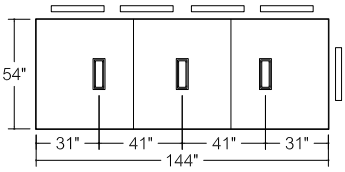

02R54X144
10 Person Table

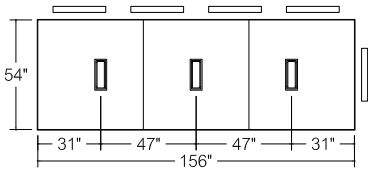

02R54X156
10 - 12 Person Table

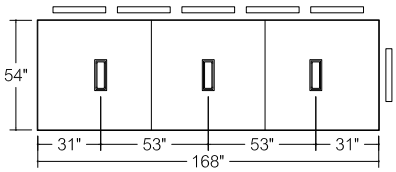

02R54X168
12 Person Table

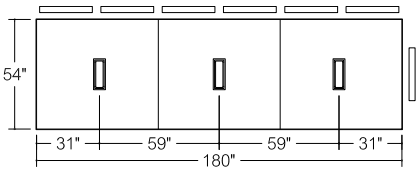

02R54X180
14 Person Table

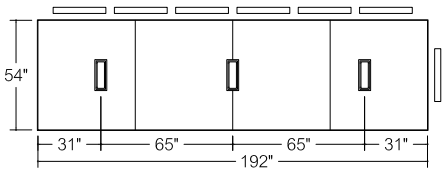

02R54X192
14 Person Table

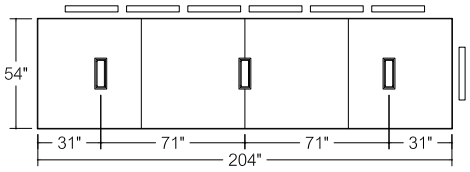

02R54X204
14 Person Table

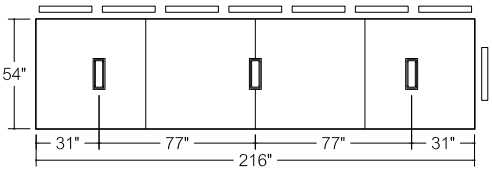

02R54X216
16 Person Table

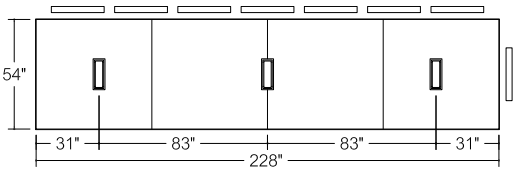

02R54X228
16 Person Table

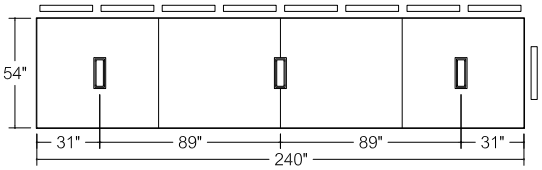

02R54X240
18 Person Table

Highline Rectangular Conference Table

54”x96”/ 6 - 8 Person
02R54X96

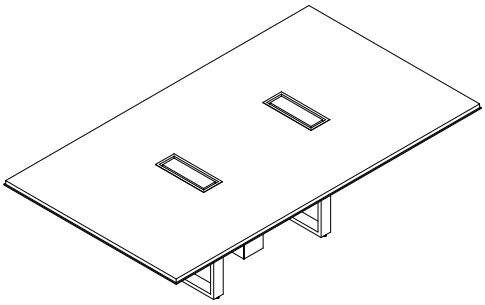

Starting Price: $11,744

54x96 table, veneer Tier 1 top with metal edge, open base, powder coat metal finish

Pattern Number: 02R54X96

Step 1. Top Material	
V	Veneer
G	Glass
C	Corian
Q	Caesarstone

Step 2. Edge Selection/Finish		
AU_ _	Spinneybeck Leather: Acqua	+2,150
MC _ _	Powder Coat	+0
PM01	Polished Chrome	+1,099
PM02	Satin Nickel	+323
PM03	Oil Rubbed Bronze	+734

Step 3. Base Type		
BL	Base Loop	+0

Step 4. Top Finish		
T1 _ _	Veneer Tier 1	+0
T2 _ _	Veneer Tier 2	+828
GC _ _	Clear Glass, back painted	+3,564
GE _ _	Etched matte Glass, back painted	+4,284
CS01	Corian Glacier White	+5,220
QS _ _	Caesarstone	+13,500

Step 5. Base Finish		
MC _ _	Powder Coat	+0
PM01	Polished Chrome	+1,099
PM02	Satin Nickel	+323
PM03	Oil Rubbed Bronze	+734

Step 6. Microphone and/or Grommet Accommodations: Optional		
MA _ _	Microphone hole (factory cut)	Qty _ _ x 321 each
GM _ _	2” Grommet Hole (factory cut), liner, lid, in matching metal finish	Qty _ _ x 423 each

Step 7. Power & Connectivity Access: Optional		
TMHW	Tabletop, Metal lid, Hardwired, Qty 2	+7,492
TMPI	Tabletop, Metal lid, Plug In, Qty 2	+6,382
UMHW	Undermount, Hardwired, Qty 4	+4,076
UMPI	Undermount, Plug In, Qty 4	+2,964

Wire Management Column (sold separately)

Required with any technology selection	
Pattern Number: 02WMC6X6	227
Pattern Number: 02WMC10X10	885

Step 1. Metal Finish for Wire Management Column		6x6	10x10
MC _ _	Powder Coat	+0	+0
PM01	Polished Chrome	+1,065	+485
PM02	Satin Nickel	+1,065	+485
PM03	Oil Rubbed Bronze	+1,065	+2,220

Please consult **page 7** for the palette of DatesWeiser finishes. Natural stone, non-standard glass and veneer, and other technology options are available. Please email **customerservice@datesweiser.com** for a custom quote. Consult technical information on **page 274** for construction details and technical information.

Highline Rectangular Conference Table

54”x108”/ 8 Person
02R54X108

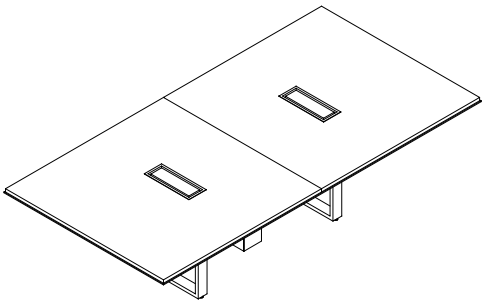

Starting Price: $12,724

54x108 table, veneer Tier 1 top with metal edge, open base, powder coat metal finish

Pattern Number: 02R54X108

Step 1. Top Material	
V	Veneer
G	Glass
C	Corian
Q	Caesarstone

Step 2. Edge Selection/Finish		
AU_ _	Spinneybeck Leather: Acqua	+2,322
MC _ _	Powder Coat	+0
PM01	Polished Chrome	+1,099
PM02	Satin Nickel	+323
PM03	Oil Rubbed Bronze	+734

Step 3. Base Type		
BL	Base Loop	+0

Step 3. Top Finish		
T1 _ _	Veneer Tier 1	+0
T2 _ _	Veneer Tier 2	+932
GC _ _	Clear Glass, back painted	+4,010
GE _ _	Etched matte Glass, back painted	+4,820
CS01	Corian Glacier White	+5,873
QS _ _	Caesarstone	+15,188

Step 5. Base Finish		
MC _ _	Powder Coat	+0
PM01	Polished Chrome	+1,099
PM02	Satin Nickel	+323
PM03	Oil Rubbed Bronze	+734

Step 6. Microphone and/or Grommet Accommodations: Optional		
MA _ _	Microphone hole (factory cut)	Qty _ _ x 321 each
GM _ _	2” Grommet Hole (factory cut), liner, lid, in matching metal finish	Qty _ _ x 423 each

Step 7. Power & Connectivity Access: Optional		
TMHW	Tabletop, Metal lid, Hardwired, Qty 2	+7,492
TMPI	Tabletop, Metal lid, Plug In, Qty 2	+6,382
UMHW	Undermount, Hardwired, Qty 4	+4,076
UMPI	Undermount, Plug In, Qty 4	+2,964

Wire Management Column (sold separately)

Required with any technology selection	
Pattern Number: 02WMC6X6	227
Pattern Number: 02WMC10X10	885

Step 1. Metal Finish for Wire Management Column		6x6	10x10
MC _ _	Powder Coat	+0	+0
PM01	Polished Chrome	+1,065	+485
PM02	Satin Nickel	+1,065	+485
PM03	Oil Rubbed Bronze	+1,595	+2,220

Please consult **page 7** for the palette of DatesWeiser finishes. Natural stone, non-standard glass and veneer, and other technology options are available. Please email **customerservice@datesweiser.com** for a custom quote. Consult technical information on **page 274** for construction details and technical information.

Highline Rectangular Conference Table

54”x120”/ 10 Person
02R54X120

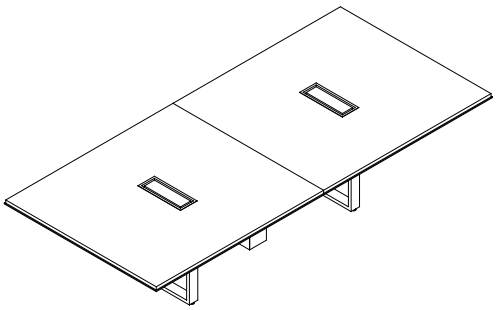

Starting Price: $13,711

54x120 table, veneer Tier 1 top with metal edge, open base, powder coat metal finish

Pattern Number: 02R54X120

Step 1. Top Material	
V	Veneer
G	Glass
C	Corian
Q	Caesarstone

Step 2. Edge Selection/Finish		
AU_ _	Spinneybeck Leather: Acqua	+2,494
MC _ _	Powder Coat	+0
PM01	Polished Chrome	+1,099
PM02	Satin Nickel	+323
PM03	Oil Rubbed Bronze	+734

Step 3. Base Type		
BL	Base Loop	+0

Step 4. Top Finish		
T1 _ _	Veneer Tier 1	+0
T2 _ _	Veneer Tier 2	+1,035
GC _ _	Clear Glass, back painted	+4,455
GE _ _	Etched matte Glass, back painted	+5,355
CS01	Corian Glacier White	+6,525
QS _ _	Caesarstone	+16,875

Step 5. Base Finish		
MC _ _	Powder Coat	+0
PM01	Polished Chrome	+1,099
PM02	Satin Nickel	+323
PM03	Oil Rubbed Bronze	+734

Step 6. Microphone and/or Grommet Accommodations: Optional		
MA _ _	Microphone hole (factory cut)	Qty _ _ x 321 each
GM _ _	2” Grommet Hole (factory cut), liner, lid, in matching metal finish	Qty _ _ x 423 each

Step 7. Power & Connectivity Access: Optional		
TMHW	Tabletop, Metal lid, Hardwired, Qty 2	+7,492
TMPI	Tabletop, Metal lid, Plug In, Qty 2	+6,382
UMHW	Undermount, Hardwired, Qty 6	+6,114
UMPI	Undermount, Plug In, Qty 6	+4,446

Wire Management Column (sold separately)

Required with any technology selection	
Pattern Number: 02WMC6X6	227
Pattern Number: 02WMC10X10	885

Step 1. Metal Finish for Wire Management Column		6x6	10x10
MC _ _	Powder Coat	+0	+0
PM01	Polished Chrome	+1,065	+485
PM02	Satin Nickel	+1,065	+485
PM03	Oil Rubbed Bronze	+1,595	+2,220

Please consult **page 7** for the palette of DatesWeiser finishes. Natural stone, non-standard glass and veneer, and other technology options are available. Please email **customerservice@datesweiser.com** for a custom quote. Consult technical information on **page 274** for construction details and technical information.

Highline Rectangular Conference Table

54”x132”/ 10 Person
02R54X132

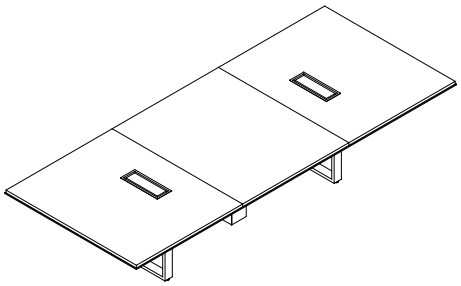

Starting Price: $16,820

54x132 table, veneer Tier 1 top with metal edge, open base, powder coat metal finish

Pattern Number: 02R54X132

Step 1. Top Material	
V	Veneer
G	Glass
C	Corian
Q	Caesarstone

Step 2. Edge Selection/Finish		
AU_ _	Spinneybeck Leather: Acqua	+2,666
MC _ _	Powder Coat	+0
PM01	Polished Chrome	+1,281
PM02	Satin Nickel	+485
PM03	Oil Rubbed Bronze	+947

Step 3. Base Type		
BL	Base Loop	+0

Step 4. Top Finish		
T1 _ _	Veneer Tier 1	+0
T2 _ _	Veneer Tier 2	+1,139
GC _ _	Clear Glass, back painted	+4,900
GE _ _	Etched matte Glass, back painted	+5,890
CS01	Corian Glacier White	+7,177
QS _ _	Caesarstone	+18,562

Step 5. Base Finish		
MC _ _	Powder Coat	+0
PM01	Polished Chrome	+1,281
PM02	Satin Nickel	+485
PM03	Oil Rubbed Bronze	+947

Step 6. Microphone and/or Grommet Accommodations: Optional		
MA _ _	Microphone hole (factory cut)	Qty _ _ x 321 each
GM _ _	2” Grommet Hole (factory cut), liner, lid, in matching metal finish	Qty _ _ x 423 each

Step 7. Power & Connectivity Access: Optional		
TMHW	Tabletop, Metal lid, Hardwired, Qty 2	+7,492
TMPI	Tabletop, Metal lid, Plug In, Qty 2	+6,382
UMHW	Undermount, Hardwired, Qty 6	+6,114
UMPI	Undermount, Plug In, Qty 6	+4,446

Wire Management Column (sold separately)

Required with any technology selection	
Pattern Number: 02WMC6X6	227
Pattern Number: 02WMC10X10	885

Step 1. Metal Finish for Wire Management Column		6x6	10x10
MC _ _	Powder Coat	+0	+0
PM01	Polished Chrome	+1,065	+485
PM02	Satin Nickel	+1,065	+485
PM03	Oil Rubbed Bronze	+1,595	+2,220

Please consult **page 7** for the palette of DatesWeiser finishes. Natural stone, non-standard glass and veneer, and other technology options are available. Please email **customerservice@datesweiser.com** for a custom quote. Consult technical information on **page 274** for construction details and technical information.

Highline Rectangular Conference Table

54”x144”/ 10 Person
02R54X144

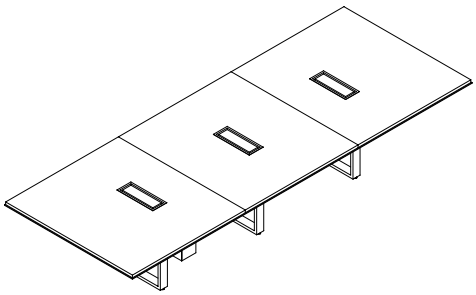

Starting Price: $17,698

54x144 table, veneer Tier 1 top with metal edge, open base, powder coat metal finish

Pattern Number: 02R54X144

Step 1. Top Material	
V	Veneer
G	Glass
C	Corian
Q	Caesarstone

Step 2. Edge Selection/Finish		
AU_ _	Spinneybeck Leather: Acqua	+2,838
MC _ _	Powder Coat	+0
PM01	Polished Chrome	+1,281
PM02	Satin Nickel	+485
PM03	Oil Rubbed Bronze	+947

Step 3. Base Type		
BL	Base Loop	+0

Step 4. Top Finish		
T1 _ _	Veneer Tier 1	+0
T2 _ _	Veneer Tier 2	+1,242
GC _ _	Clear Glass, back painted	+5,346
GE _ _	Etched matte Glass, back painted	+6,426
CS01	Corian Glacier White	+7,830
QS _ _	Caesarstone	+20,250

Step 5. Base Finish		
MC _ _	Powder Coat	+0
PM01	Polished Chrome	+1,281
PM02	Satin Nickel	+485
PM03	Oil Rubbed Bronze	+947

Step 6. Microphone and/or Grommet Accommodations: Optional		
MA _ _	Microphone hole (factory cut)	Qty _ _ x 321 each
GM _ _	2” Grommet Hole (factory cut), liner, lid, in matching metal finish	Qty _ _ x 423 each

Step 7. Power & Connectivity Access: Optional		
TMHW	Tabletop, Metal lid, Hardwired, Qty 3	+11,238
TMPI	Tabletop, Metal lid, Plug In, Qty 3	+9,573
UMHW	Undermount, Hardwired, Qty 6	+6,114
UMPI	Undermount, Plug In, Qty 6	+4,446

Wire Management Column (sold separately)

Required with any technology selection	
Pattern Number: 02WMC6X6	227
Pattern Number: 02WMC10X10	885

Step 1. Metal Finish for Wire Management Column		6x6	10x10
MC _ _	Powder Coat	+0	+0
PM01	Polished Chrome	+1,065	+485
PM02	Satin Nickel	+1,065	+485
PM03	Oil Rubbed Bronze	+1,595	+2,220

Please consult **page 7** for the palette of DatesWeiser finishes. Natural stone, non-standard glass and veneer, and other technology options are available. Please email **customerservice@datesweiser.com** for a custom quote. Consult technical information on **page 274** for construction details and technical information.

Highline Rectangular Conference Table

54”x156”/ 10 - 12 Person
02R54X156

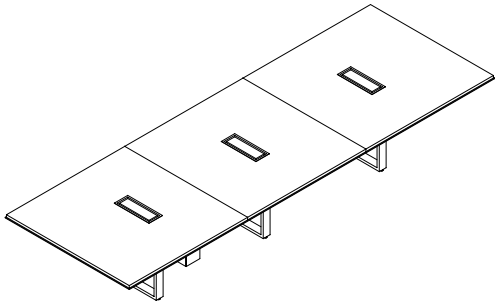

Starting Price: $18,164

54x156 table, veneer Tier 1 top with metal edge, open base, powder coat metal finish

Pattern Number: 02R54X156

Step 1. Top Material	
V	Veneer
G	Glass
C	Corian
Q	Caesarstone

Step 2. Edge Selection/Finish		
AU_ _	Spinneybeck Leather: Acqua	+3,010
MC _ _	Powder Coat	+0
PM01	Polished Chrome	+1,281
PM02	Satin Nickel	+485
PM03	Oil Rubbed Bronze	+947

Step 3. Base Type		
BL	Base Loop	+0

Step 4. Top Finish		
T1 _ _	Veneer Tier 1	+0
T2 _ _	Veneer Tier 2	+1,345
GC _ _	Clear Glass, back painted	+5,791
GE _ _	Etched matte Glass, back painted	+6,961
CS01	Corian Glacier White	+8,482
QS _ _	Caesarstone	+21,938

Step 5. Base Finish		
AU_ _	Spinneybeck Leather: Acqua	+3,010
MC _ _	Powder Coat	+0
PM01	Polished Chrome	+1,281
PM02	Satin Nickel	+485
PM03	Oil Rubbed Bronze	+947

Step 6. Microphone and/or Grommet Accommodations: Optional		
MA _ _	Microphone hole (factory cut)	Qty _ _ x 321 each
GM _ _	2” Grommet Hole (factory cut), liner, lid, in matching metal finish	Qty _ _ x 423 each

Step 7. Power & Connectivity Access: Optional		
TMHW	Tabletop, Metal lid, Hardwired, Qty 3	+11,238
TMPI	Tabletop, Metal lid, Plug In, Qty 3	+9,573
UMHW	Undermount, Hardwired, Qty 6	+6,114
UMPI	Undermount, Plug In, Qty 6	+4,446

Wire Management Column (sold separately)

Required with any technology selection	
Pattern Number: 02WMC6X6	227
Pattern Number: 02WMC10X10	885

Step 1. Metal Finish for Wire Management Column		6x6	10x10
MC _ _	Powder Coat	+0	+0
PM01	Polished Chrome	+1,065	+485
PM02	Satin Nickel	+1,065	+485
PM03	Oil Rubbed Bronze	+1,595	+2,220

Please consult **page 7** for the palette of DatesWeiser finishes. Natural stone, non-standard glass and veneer, and other technology options are available. Please email **customerservice@datesweiser.com** for a custom quote. Consult technical information on **page 274** for construction details and technical information.

Highline Rectangular Conference Table

54”x168”/ 12 Person
02R54X168

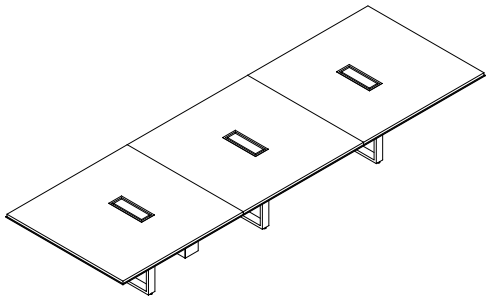

Starting Price: $19,247

54x168 table, veneer Tier 1 top with metal edge, open base, powder coat metal finish

Pattern Number: 02R54X168

Step 1. Top Material	
V	Veneer
G	Glass
C	Corian
Q	Caesarstone

Step 2. Edge Selection/Finish		
AU_ _	Spinneybeck Leather: Acqua	+3,182
MC _ _	Powder Coat	+0
PM01	Polished Chrome	+1,911
PM02	Satin Nickel	+486
PM03	Oil Rubbed Bronze	+1,153

Step 3. Base Type		
BL	Base Loop	+0

Step 4. Top Finish		
T1 _ _	Veneer Tier 1	+0
T2 _ _	Veneer Tier 2	+1,449
GC _ _	Clear Glass, back painted	+6,237
GE _ _	Etched matte Glass, back painted	+7,497
CS01	Corian Glacier White	+9,135
QS _ _	Caesarstone	+23,625

Step 5. Base Finish		
MC _ _	Powder Coat	+0
PM01	Polished Chrome	+1,911
PM02	Satin Nickel	+486
PM03	Oil Rubbed Bronze	+1,153

Step 6. Microphone and/or Grommet Accommodations: Optional		
MA _ _	Microphone hole (factory cut)	Qty _ _ x 321 each
GM _ _	2” Grommet Hole (factory cut), liner, lid, in matching metal finish	Qty _ _ x 423 each

Step 7. Power & Connectivity Access: Optional		
TMHW	Tabletop, Metal lid, Hardwired, Qty 3	+11,238
TMPI	Tabletop, Metal lid, Plug In, Qty 3	+9,573
UMHW	Undermount, Hardwired, Qty 6	+6,114
UMPI	Undermount, Plug In, Qty 6	+4,446

Wire Management Column (sold separately)

Required with any technology selection

Pattern Number: 02WMC6X6	227
Pattern Number: 02WMC10X10	885

Step 1. Metal Finish for Wire Management Column		6x6	10x10
MC _ _	Powder Coat	+0	+0
PM01	Polished Chrome	+1,065	+485
PM02	Satin Nickel	+1,065	+485
PM03	Oil Rubbed Bronze	+1,065	+2,220

Please consult **page 7** for the palette of DatesWeiser finishes. Natural stone, non-standard glass and veneer, and other technology options are available. Please email **customerservice@datesweiser.com** for a custom quote. Consult technical information on **page 274** for construction details and technical information.

Highline Rectangular Conference Table

54”x180”/ 14 Person
02R54X180

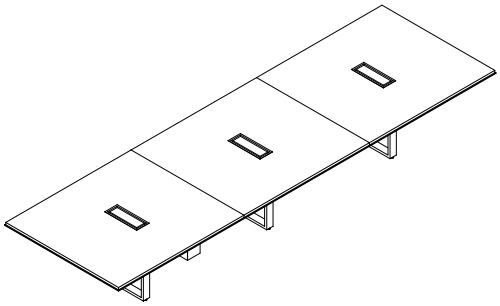

Starting Price: $19,767

54x180 table, veneer Tier 1 top with metal edge, open base, powder coat metal finish

Pattern Number: 02R54X180

Step 1. Top Material	
V	Veneer
G	Glass
C	Corian
Q	Caesarstone

Step 2. Edge Selection/Finish		
AU_ _	Spinneybeck Leather: Acqua	+3,354
MC _ _	Powder Coat	+0
PM01	Polished Chrome	+1,911
PM02	Satin Nickel	+486
PM03	Oil Rubbed Bronze	+1,153

Step 3. Base Type		
BL	Base Loop	+0

Step 4. Top Finish		
T1 _ _	Veneer Tier 1	+0
T2 _ _	Veneer Tier 2	+1,552
GC _ _	Clear Glass, back painted	+6,682
GE _ _	Etched matte Glass, back painted	+8,032
CS01	Corian Glacier White	+9,787
QS _ _	Caesarstone	+25,313

Step 5. Base Finish		
MC _ _	Powder Coat	+0
PM01	Polished Chrome	+1,911
PM02	Satin Nickel	+486
PM03	Oil Rubbed Bronze	+1,153

Step 6. Microphone and/or Grommet Accommodations: Optional		
MA _ _	Microphone hole (factory cut)	Qty _ _ x 321 each
GM _ _	2” Grommet Hole (factory cut), liner, lid, in matching metal finish	Qty _ _ x 423 each

Step 7. Power & Connectivity Access: Optional		
TMHW	Tabletop, Metal lid, Hardwired, Qty 3	+11,238
TMPI	Tabletop, Metal lid, Plug In, Qty 3	+9,573
UMHW	Undermount, Hardwired, Qty 8	+8,152
UMPI	Undermount, Plug In, Qty 8	+5,928

Wire Management Column (sold separately)

Required with any technology selection	
Pattern Number: 02WMC6X6	227
Pattern Number: 02WMC10X10	885

Step 1. Metal Finish for Wire Management Column		6x6	10x10
MC _ _	Powder Coat	+0	+0
PM01	Polished Chrome	+1,065	+485
PM02	Satin Nickel	+1,065	+485
PM03	Oil Rubbed Bronze	+1,595	+2,220

Please consult **page 7** for the palette of DatesWeiser finishes. Natural stone, non-standard glass and veneer, and other technology options are available. Please email **customerservice@datesweiser.com** for a custom quote. Consult technical information on **page 274** for construction details and technical information.

Highline Rectangular Conference Table

54”x192”/ 14 Person
02R54X192

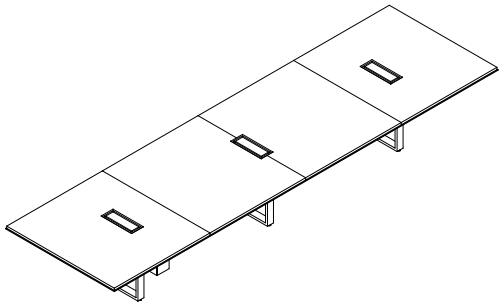

Starting Price: $21,674

54x192 table, veneer Tier 1 top with metal edge, open base, powder coat metal finish

Pattern Number: 02R54X192

Step 1. Top Material	
V	Veneer
G	Glass
C	Corian
Q	Caesarstone

Step 2. Edge Selection/Finish		
AU_ _	Spinneybeck Leather: Acqua	+3,526
MC _ _	Powder Coat	+0
PM01	Polished Chrome	+1,911
PM02	Satin Nickel	+486
PM03	Oil Rubbed Bronze	+1,153

Step 3. Base Type		
BL	Base Loop	+0

Step 4. Top Finish		
T1 _ _	Veneer Tier 1	+0
T2 _ _	Veneer Tier 2	+1,656
GC _ _	Clear Glass, back painted	+7,128
GE _ _	Etched matte Glass, back painted	+8,568
CS01	Corian Glacier White	+10,441
QS _ _	Caesarstone	+27,000

Step 5. Base Finish		
MC _ _	Powder Coat	+0
PM01	Polished Chrome	+1,911
PM02	Satin Nickel	+486
PM03	Oil Rubbed Bronze	+1,153

Step 6. Microphone and/or Grommet Accommodations: Optional		
MA _ _	Microphone hole (factory cut)	Qty _ _ x 321 each
GM _ _	2” Grommet Hole (factory cut), liner, lid, in matching metal finish	Qty _ _ x 423 each

Step 7. Power & Connectivity Access: Optional		
TMHW	Tabletop, Metal lid, Hardwired, Qty 3	+11,238
TMPI	Tabletop, Metal lid, Plug In, Qty 3	+9,573
UMHW	Undermount, Hardwired, Qty 8	+8,152
UMPI	Undermount, Plug In, Qty 8	+5,928

Wire Management Column (sold separately)

Required with any technology selection

Pattern Number: 02WMC6X6	227
Pattern Number: 02WMC10X10	885

Step 1. Metal Finish for Wire Management Column		6x6	10x10
MC _ _	Powder Coat	+0	+0
PM01	Polished Chrome	+1,065	+485
PM02	Satin Nickel	+1,065	+485
PM03	Oil Rubbed Bronze	+1,595	+2,220

Please consult **page 7** for the palette of DatesWeiser finishes. Natural stone, non-standard glass and veneer, and other technology options are available. Please email **customerservice@datesweiser.com** for a custom quote. Consult technical information on **page 274** for construction details and technical information.

Highline Rectangular Conference Table

54”x204”/ 14 Person
02R54X204

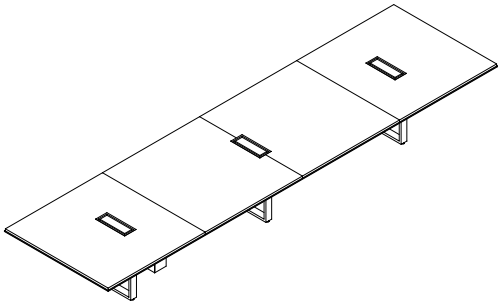

Starting Price: $22,205

54x204 table, veneer Tier 1 top with metal edge, open base, powder coat metal finish

Pattern Number: 02R54X204

Step 1. Top Material	
V	Veneer
G	Glass
C	Corian
Q	Caesarstone

Step 2. Edge Selection/Finish		
AU_ _	Spinneybeck Leather: Acqua	+3,698
MC _ _	Powder Coat	+0
PM01	Polished Chrome	+1,911
PM02	Satin Nickel	+486
PM03	Oil Rubbed Bronze	+1,153

Step 3. Base Type		
BL	Base Loop	+0

Step 4. Top Finish		
T1 _ _	Veneer Tier 1	+0
T2 _ _	Veneer Tier 2	+1,760
GC _ _	Clear Glass, back painted	+7,574
GE _ _	Etched matte Glass, back painted	+9,104
CS01	Corian Glacier White	+11,093
QS _ _	Caesarstone	+28,687

Step 5. Base Finish		
MC _ _	Powder Coat	+0
PM01	Polished Chrome	+1,911
PM02	Satin Nickel	+486
PM03	Oil Rubbed Bronze	+1,153

Step 6. Microphone and/or Grommet Accommodations: Optional		
MA _ _	Microphone hole (factory cut)	Qty _ _ x 321 each
GM _ _	2” Grommet Hole (factory cut), liner, lid, in matching metal finish	Qty _ _ x 423 each

Step 7. Power & Connectivity Access: Optional		
TMHW	Tabletop, Metal lid, Hardwired, Qty 3	+11,238
TMPI	Tabletop, Metal lid, Plug In, Qty 3	+9,573
UMHW	Undermount, Hardwired, Qty 8	+8,152
UMPI	Undermount, Plug In, Qty 8	+5,928

Wire Management Column (sold separately)

Required with any technology selection	
Pattern Number: 02WMC6X6	227
Pattern Number: 02WMC10X10	885

Step 1. Metal Finish for Wire Management Column		6x6	10x10
MC _ _	Powder Coat	+0	+0
PM01	Polished Chrome	+1,065	+485
PM02	Satin Nickel	+1,065	+485
PM03	Oil Rubbed Bronze	+1,595	+2,220

Please consult **page 7** for the palette of DatesWeiser finishes. Natural stone, non-standard glass and veneer, and other technology options are available. Please email **customerservice@datesweiser.com** for a custom quote. Consult technical information on **page 274** for construction details and technical information.

Highline Rectangular Conference Table

54”x216”/ 16 Person
02R54X216

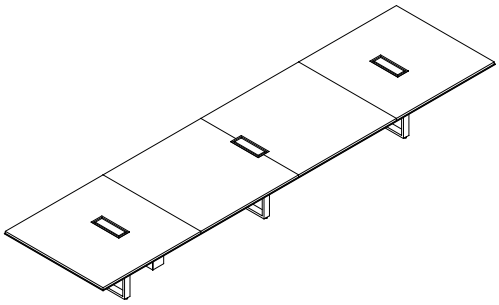

Starting Price: $22,747

54x216 table, veneer Tier 1 top with metal edge, open base, powder coat metal finish

Pattern Number: 02R54X216

Step 1. Top Material	
V	Veneer
G	Glass
C	Corian
Q	Caesarstone

Step 2. Edge Selection/Finish		
AU_ _	Spinneybeck Leather: Acqua	+3,870
MC _ _	Powder Coat	+0
PM01	Polished Chrome	+1,911
PM02	Satin Nickel	+486
PM03	Oil Rubbed Bronze	+1,153

Step 3. Base Type		
BL	Base Loop	+0

Step 4. Top Finish		
T1 _ _	Veneer Tier 1	+0
T2 _ _	Veneer Tier 2	+1,863
GC _ _	Clear Glass, back painted	+8,019
GE _ _	Etched matte Glass, back painted	+9,639
CS01	Corian Glacier White	+11,745
QS _ _	Caesarstone	+30,375

Step 5. Base Finish		
MC _ _	Powder Coat	+0
PM01	Polished Chrome	+1,911
PM02	Satin Nickel	+486
PM03	Oil Rubbed Bronze	+1,153

Step 6. Microphone and/or Grommet Accommodations: Optional		
MA _ _	Microphone hole (factory cut)	Qty _ _ x 321 each
GM _ _	2” Grommet Hole (factory cut), liner, lid, in matching metal finish	Qty _ _ x 423 each

Step 7. Power & Connectivity Access: Optional		
TMHW	Tabletop, Metal lid, Hardwired, Qty 3	+11,238
TMPI	Tabletop, Metal lid, Plug In, Qty 3	+9,573
UMHW	Undermount, Hardwired, Qty 8	+8,152
UMPI	Undermount, Plug In, Qty 8	+5,928

Wire Management Column (sold separately)

Required with any technology selection	
Pattern Number: 02WMC6X6	227
Pattern Number: 02WMC10X10	885

Step 1. Metal Finish for Wire Management Column		6x6	10x10
MC _ _	Powder Coat	+0	+0
PM01	Polished Chrome	+1,065	+485
PM02	Satin Nickel	+1,065	+485
PM03	Oil Rubbed Bronze	+1,595	+2,220

Please consult **page 7** for the palette of DatesWeiser finishes. Natural stone, non-standard glass and veneer, and other technology options are available. Please email **customerservice@datesweiser.com** for a custom quote. Consult technical information on **page 274** for construction details and technical information.

Highline Rectangular Conference Table

54”x228”/ 16 Person
02R54X228

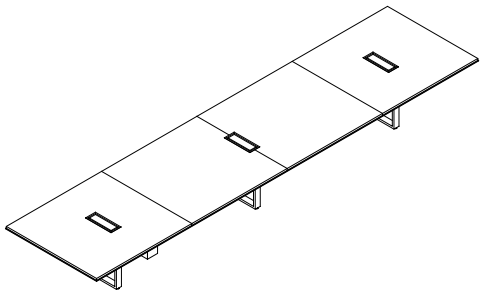

Starting Price: $23,262

54x228 table, veneer Tier 1 top with metal edge, open base, powder coat metal finish

Pattern Number: 02R54X228

Step 1. Top Material	
V	Veneer
G	Glass
C	Corian
Q	Caesarstone

Step 2. Edge Selection/Finish		
AU_ _	Spinneybeck Leather: Acqua	+4,042
MC _ _	Powder Coat	+0
PM01	Polished Chrome	+1,911
PM02	Satin Nickel	+486
PM03	Oil Rubbed Bronze	+1,153

Step 3. Base Type		
BL	Base Loop	+0

Step 4. Top Finish		
T1 _ _	Veneer Tier 1	+0
T2 _ _	Veneer Tier 2	+1,966
GC _ _	Clear Glass, back painted	+8,465
GE _ _	Etched matte Glass, back painted	+10,175
CS01	Corian Glacier White	+12,397
QS _ _	Caesarstone	+32,063

Step 5. Base Finish		
MC _ _	Powder Coat	+0
PM01	Polished Chrome	+1,911
PM02	Satin Nickel	+486
PM03	Oil Rubbed Bronze	+1,153

Step 6. Microphone and/or Grommet Accommodations: Optional		
MA _ _	Microphone hole (factory cut)	Qty _ _ x 321 each
GM _ _	2” Grommet Hole (factory cut), liner, lid, in matching metal finish	Qty _ _ x 423 each

Step 7. Power & Connectivity Access: Optional		
TMHW	Tabletop, Metal lid, Hardwired, Qty 3	+11,238
TMPI	Tabletop, Metal lid, Plug In, Qty 3	+9,573
UMHW	Undermount, Hardwired, Qty 8	+8,152
UMPI	Undermount, Plug In, Qty 8	+5,928

Wire Management Column (sold separately)

Required with any technology selection	
Pattern Number: 02WMC6X6	227
Pattern Number: 02WMC10X10	885

Step 1. Metal Finish for Wire Management Column		6x6	10x10
MC _ _	Powder Coat	+0	+0
PM01	Polished Chrome	+1,065	+485
PM02	Satin Nickel	+1,065	+485
PM03	Oil Rubbed Bronze	+1,595	+2,220

Please consult **page 7** for the palette of DatesWeiser finishes. Natural stone, non-standard glass and veneer, and other technology options are available. Please email **customerservice@datesweiser.com** for a custom quote. Consult technical information on **page 274** for construction details and technical information.

Highline Rectangular Conference Table

54”x240”/ 18 Person
02R54X240

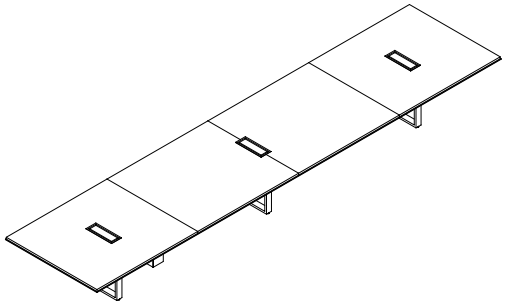

Starting Price: $23,798

54x240 table, veneer Tier 1 top with metal edge, open base, powder coat metal finish

Pattern Number: 02R54X240

Step 1. Top Material	
V	Veneer
G	Glass
C	Corian
Q	Caesarstone

Step 2. Edge Selection/Finish		
AU_ _	Spinneybeck Leather: Acqua	+4,214
MC _ _	Powder Coat	+0
PM01	Polished Chrome	+1,911
PM02	Satin Nickel	+486
PM03	Oil Rubbed Bronze	+1,153

Step 3. Base Type		
BL	Base Loop	+0

Step 4. Top Finish		
T1 _ _	Veneer Tier 1	+0
T2 _ _	Veneer Tier 2	+2,070
GC _ _	Clear Glass, back painted	+8,910
GE _ _	Etched matte Glass, back painted	+10,710
CS01	Corian Glacier White	+13,050
QS _ _	Caesarstone	+33,750

Step 5. Base Finish		
MC _ _	Powder Coat	+0
PM01	Polished Chrome	+1,911
PM02	Satin Nickel	+486
PM03	Oil Rubbed Bronze	+1,153

Step 6. Microphone and/or Grommet Accommodations: Optional		
MA _ _	Microphone hole (factory cut)	Qty _ _ x 321 each
GM _ _	2” Grommet Hole (factory cut), liner, lid, in matching metal finish	Qty _ _ x 423 each

Step 7. Power & Connectivity Access: Optional		
TMHW	Tabletop, Metal lid, Hardwired, Qty 3	+11,238
TMPI	Tabletop, Metal lid, Plug In, Qty 3	+9,573
UMHW	Undermount, Hardwired, Qty 10	+10,190
UMPI	Undermount, Plug In, Qty 10	+7,410

Wire Management Column (sold separately)

Required with any technology selection

Pattern Number: 02WMC6X6	227
Pattern Number: 02WMC10X10	885

Step 1. Metal Finish for Wire Management Column		6x6	10x10
MC _ _	Powder Coat	+0	+0
PM01	Polished Chrome	+1,065	+485
PM02	Satin Nickel	+1,065	+485
PM03	Oil Rubbed Bronze	+1,595	+2,220

Please consult **page 7** for the palette of DatesWeiser finishes. Natural stone, non-standard glass and veneer, and other technology options are available. Please email **customerservice@datesweiser.com** for a custom quote. Consult technical information on **page 274** for construction details and technical information.

Highline Rectangular Conference Tables Index

60″ width

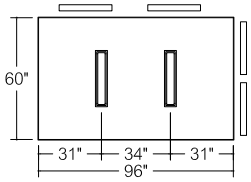

02R60X96
8 Person Table

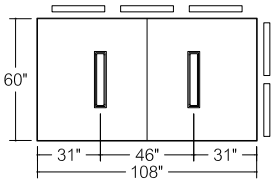

02R60X108
10 Person Table

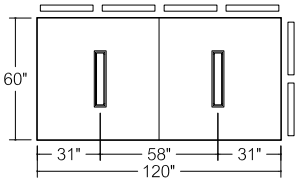

02R60X120
12 Person Table

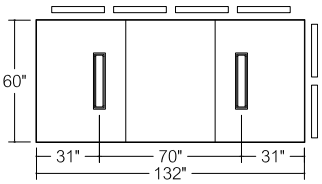

02R60X132
12 Person Table

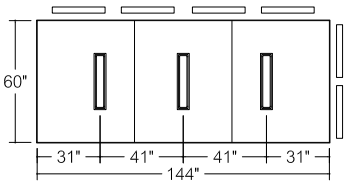

02R60X144
12 Person Table

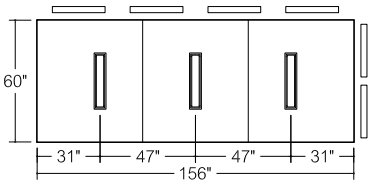

02R60X156
12 Person Table

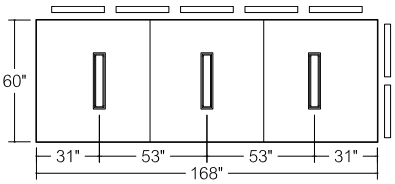

02R60X168
14 Person Table

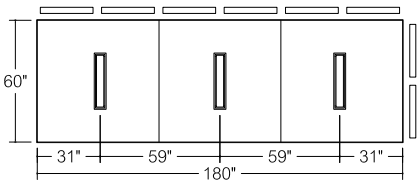

02R60X180
16 Person Table

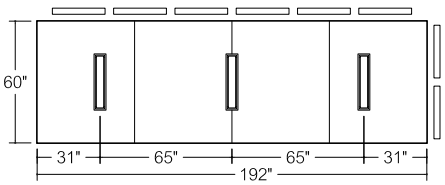

02R60X192
16 Person Table

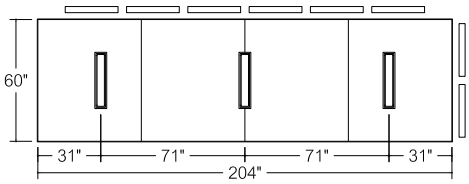

02R60X204
16 Person Table

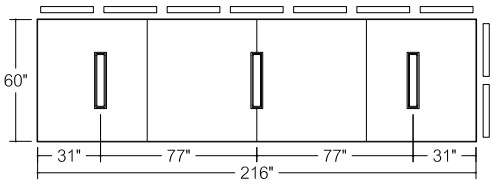

02R60X216
18 Person Table

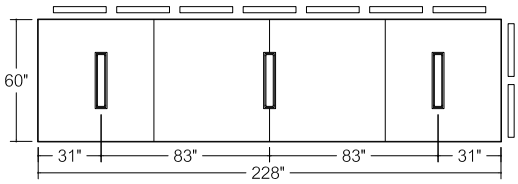

02R60X228
18 Person Table

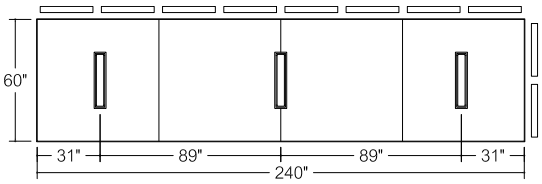

02R60X240
20 Person Table

Highline Rectangular Conference Table

60”x96”/ 8 Person
02R60X96

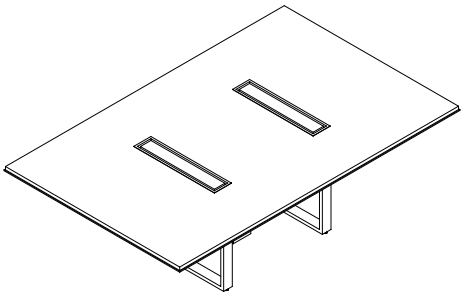

Starting Price: $12,171

60x96 table, veneer Tier 1 top with metal edge, open base, powder coat metal finish

Pattern Number: 02R60X96

Step 1. Top Material	
V	Veneer
G	Glass
C	Corian
Q	Caesarstone

Step 2. Edge Selection/Finish		
AU_ _	Spinneybeck Leather: Acqua	+2,236
MC _ _	Powder Coat	+0
PM01	Polished Chrome	+1,139
PM02	Satin Nickel	+323
PM03	Oil Rubbed Bronze	+1,058

Step 3. Base Type		
BL	Base Loop	+0

Step 4. Top Finish		
T1 _ _	Veneer Tier 1	+0
T2 _ _	Veneer Tier 2	+920
GC _ _	Clear Glass, back painted	+3,960
GE _ _	Etched matte Glass, back painted	+4,760
CS01	Corian Glacier White	+5,800
QS _ _	Caesarstone	+15,000

Step 5. Base Finish		
MC _ _	Powder Coat	+0
PM01	Polished Chrome	+1,139
PM02	Satin Nickel	+323
PM03	Oil Rubbed Bronze	+1,058

Step 6. Microphone and/or Grommet Accommodations: Optional		
MA _ _	Microphone hole (factory cut)	Qty _ _ x 321 each
GM _ _	2” Grommet Hole (factory cut), liner, lid, in matching metal finish	Qty _ _ x 423 each

Step 7. Power & Connectivity Access: Optional		
TMHW	Tabletop, Metal lid, Hardwired, Qty 2	+9,514
TMPI	Tabletop, Metal lid, Plug In, Qty 2	+8,402
UMHW	Undermount, Hardwired, Qty 4	+4,076
UMPI	Undermount, Plug In, Qty 4	+2,964

Wire Management Column (sold separately)

Required with any technology selection

Pattern Number: 02WMC6X6	227
Pattern Number: 02WMC10X10	885

Step 1. Metal Finish for Wire Management Column		6x6	10x10
MC _ _	Powder Coat	+0	+0
PM01	Polished Chrome	+1,065	+485
PM02	Satin Nickel	+1,065	+485
PM03	Oil Rubbed Bronze	+1,595	+2,220

Please consult **page 7** for the palette of DatesWeiser finishes. Natural stone, non-standard glass and veneer, and other technology options are available. Please email **customerservice@datesweiser.com** for a custom quote. Consult technical information on **page 274** for construction details and technical information.

Highline Rectangular Conference Table

60”x108”/ 10 Person
02R60X108

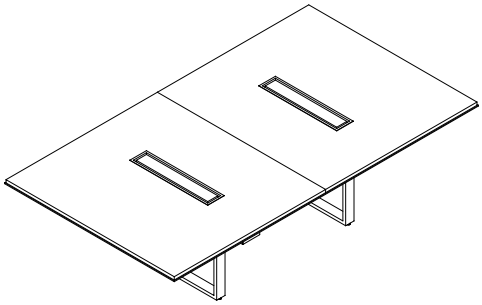

Starting Price: $13,112

60x108 table, veneer Tier 1 top with metal edge, open base, powder coat metal finish

Pattern Number: 02R60X108

Step 1. Top Material	
V	Veneer
G	Glass
C	Corian
Q	Caesarstone

Step 2. Edge Seletion/Finish		
AU_ _	Spinneybeck Leather: Acqua	+2,408
MC _ _	Powder Coat	+0
PM01	Polished Chrome	+1,139
PM02	Satin Nickel	+323
PM03	Oil Rubbed Bronze	+1,058

Step 3. Base Type		
BL	Base Loop	+0

Step 4. Top Finish		
T1 _ _	Veneer Tier 1	+0
T2 _ _	Veneer Tier 2	+1,035
GC _ _	Clear Glass, back painted	+4,455
GE _ _	Etched matte Glass, back painted	+5,355
CS01	Corian Glacier White	+6,525
QS _ _	Caesarstone	+16,875

Step 5. Base Finish		
MC _ _	Powder Coat	+0
PM01	Polished Chrome	+1,139
PM02	Satin Nickel	+323
PM03	Oil Rubbed Bronze	+1,058

Step 6. Microphone and/or Grommet Accommodations: Optional		
MA _ _	Microphone hole (factory cut)	Qty _ _ x 321 each
GM _ _	2” Grommet Hole (factory cut), liner, lid, in matching metal finish	Qty _ _ x 423 each

Step 7. Power & Connectivity Access: Optional		
TMHW	Tabletop, Metal lid, Hardwired, Qty 2	+9,514
TMPI	Tabletop, Metal lid, Plug In, Qty 2	+8,402
UMHW	Undermount, Hardwired, Qty 4	+4,076
UMPI	Undermount, Plug In, Qty 4	+2,964

Wire Management Column (sold separately)

Required with any technology selection

Pattern Number: 02WMC6X6	227
Pattern Number: 02WMC10X10	885

Step 1. Metal Finish for Wire Management Column		6x6	10x10
MC _ _	Powder Coat	+0	+0
PM01	Polished Chrome	+1,065	+485
PM02	Satin Nickel	+1,065	+485
PM03	Oil Rubbed Bronze	+1,595	+2,220

Please consult **page 7** for the palette of DatesWeiser finishes. Natural stone, non-standard glass and veneer, and other technology options are available. Please email **customerservice@datesweiser.com** for a custom quote. Consult technical information on **page 274** for construction details and technical information.

Highline Rectangular Conference Table

60”x120”/ 12 Person
02R60X120

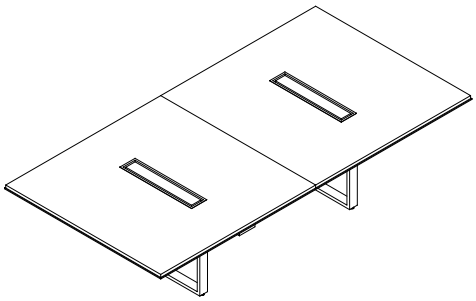

Starting Price: $13,990

60x120 table, veneer Tier 1 top with metal edge, open base, powder coat metal finish

Pattern Number: 02R60X120

Step 1. Top Material	
V	Veneer
G	Glass
C	Corian
Q	Caesarstone

Step 2. Edge Selection/Finish		
AU_ _	Spinneybeck Leather: Acqua	+2,580
MC _ _	Powder Coat	+0
PM01	Polished Chrome	+1,139
PM02	Satin Nickel	+323
PM03	Oil Rubbed Bronze	+1,058

Step 3. Base Type		
BL	Base Loop	+0

Step 4. Top Finish		
T1 _ _	Veneer Tier 1	+0
T2 _ _	Veneer Tier 2	+1,150
GC _ _	Clear Glass, back painted	+4,950
GE _ _	Etched matte Glass, back painted	+5,950
CS01	Corian Glacier White	+7,250
QS _ _	Caesarstone	+18,750

Step 5. Base Finish		
MC _ _	Powder Coat	+0
PM01	Polished Chrome	+1,139
PM02	Satin Nickel	+323
PM03	Oil Rubbed Bronze	+1,058

Step 6. Microphone and/or Grommet Accommodations: Optional		
MA _ _	Microphone hole (factory cut)	Qty _ _ x 321 each
GM _ _	2” Grommet Hole (factory cut), liner, lid, in matching metal finish	Qty _ _ x 423 each

Step 7. Power & Connectivity Access: Optional		
TMHW	Tabletop, Metal lid, Hardwired, Qty 2	+9,514
TMPI	Tabletop, Metal lid, Plug In, Qty 2	+8,402
UMHW	Undermount, Hardwired, Qty 6	+6,114
UMPI	Undermount, Plug In, Qty 6	+4,446

Wire Management Column (sold separately)

Required with any technology selection	
Pattern Number: 02WMC6X6	227
Pattern Number: 02WMC10X10	885

Step 1. Metal Finish for Wire Management Column		6x6	10x10
MC _ _	Powder Coat	+0	+0
PM01	Polished Chrome	+1,065	+485
PM02	Satin Nickel	+1,065	+485
PM03	Oil Rubbed Bronze	+1,595	+2,220

Please consult **page 7** for the palette of DatesWeiser finishes. Natural stone, non-standard glass and veneer, and other technology options are available. Please email **customerservice@datesweiser.com** for a custom quote. Consult technical information on **page 274** for construction details and technical information.

Highline Rectangular Conference Table

60”x132”/ 12 Person
02R60X132

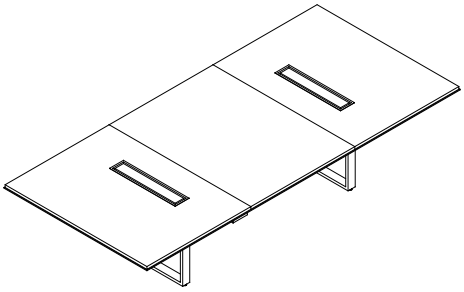

Starting Price: $16,641

60x132 table, veneer Tier 1 top with metal edge, open base, powder coat metal finish

Pattern Number: 02R60X132

Step 1. Top Material	
V	Veneer
G	Glass
C	Corian
Q	Caesarstone

Step 2. Edge Selection/Finish		
AU_ _	Spinneybeck Leather: Acqua	+2,752
MC _ _	Powder Coat	+0
PM01	Polished Chrome	+1,299
PM02	Satin Nickel	+459
PM03	Oil Rubbed Bronze	+956

Step 3. Base Type		
BL	Base Loop	+0

Step 4. Top Finish		
T1 _ _	Veneer Tier 1	+0
T2 _ _	Veneer Tier 2	+1,265
GC _ _	Clear Glass, back painted	+5,445
GE _ _	Etched matte Glass, back painted	+6,545
CS01	Corian Glacier White	+7,975
QS _ _	Caesarstone	+20,625

Step 5. Base Finish		
MC _ _	Powder Coat	+0
PM01	Polished Chrome	+1,299
PM02	Satin Nickel	+459
PM03	Oil Rubbed Bronze	+956

Step 6. Microphone and/or Grommet Accommodations: Optional		
MA _ _	Microphone hole (factory cut)	Qty _ _ x 321 each
GM _ _	2” Grommet Hole (factory cut), liner, lid, in matching metal finish	Qty _ _ x 423 each

Step 7. Power & Connectivity Access: Optional		
TMHW	Tabletop, Metal lid, Hardwired, Qty 2	+9,514
TMPI	Tabletop, Metal lid, Plug In, Qty 2	+8,402
UMHW	Undermount, Hardwired, Qty 6	+6,114
UMPI	Undermount, Plug In, Qty 6	+4,446

Wire Management Column (sold separately)

Required with any technology selection	
Pattern Number: 02WMC6X6	227
Pattern Number: 02WMC10X10	885

Step 1. Metal Finish for Wire Management Column			6x6	10x10
MC _ _	Powder Coat	+0	+0	+0
PM01	Polished Chrome		+1,065	+485
PM02	Satin Nickel		+1,065	+485
PM03	Oil Rubbed Bronze		+1,595	2,220

Please consult **page 7** for the palette of DatesWeiser finishes. Natural stone, non-standard glass and veneer, and other technology options are available. Please email **customerservice@datesweiser.com** for a custom quote. Consult technical information on **page 274** for construction details and technical information.

Highline Rectangular Conference Table

60”x144”/ 12 Person
02R60X144

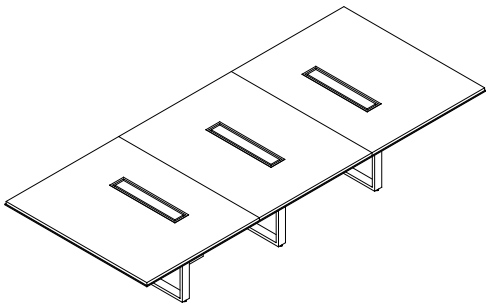

Starting Price: $18,367

60x144 table, veneer Tier 1 top with metal edge, open base, powder coat metal finish

Pattern Number: 02R60X144

Step 1. Top Material	
V	Veneer
G	Glass
C	Corian
Q	Caesarstone

Step 2. Edge/Selection Finish		
AU_ _	Spinneybeck Leather: Acqua	+2,924
MC _ _	Powder Coat	+0
PM01	Polished Chrome	+1,299
PM02	Satin Nickel	+459
PM03	Oil Rubbed Bronze	+956

Step 3. Base Type		
BL	Base Loop	+0

Step 4. Top Finish		
T1 _ _	Veneer Tier 1	+0
T2 _ _	Veneer Tier 2	+1,380
GC _ _	Clear Glass, back painted	+5,940
GE _ _	Etched matte Glass, back painted	+7,140
CS01	Corian Glacier White	+8,700
QS _ _	Caesarstone	+22,500

Step 5. Base Finish		
MC _ _	Powder Coat	+0
PM01	Polished Chrome	+1,299
PM02	Satin Nickel	+459
PM03	Oil Rubbed Bronze	+956

Step 6. Microphone and/or Grommet Accommodations: Optional		
MA _ _	Microphone hole (factory cut)	Qty _ _ x 321 each
GM _ _	2” Grommet Hole (factory cut), liner, lid, in matching metal finish	Qty _ _ x 423 each

Step 7. Power & Connectivity Access: Optional		
TMHW	Tabletop, Metal lid, Hardwired, Qty 3	+14,271
TMPI	Tabletop, Metal lid, Plug In, Qty 3	+12,603
UMHW	Undermount, Hardwired, Qty 6	+6,114
UMPI	Undermount, Plug In, Qty 6	+4,446

Wire Management Column (sold separately)

Required with any technology selection	
Pattern Number: 02WMC6X6	227
Pattern Number: 02WMC10X10	885

Step 1. Metal Finish for Wire Management Column		6x6	10x10
MC _ _	Powder Coat	+0	+0
PM01	Polished Chrome	+1,065	+485
PM02	Satin Nickel	+1,065	+485
PM03	Oil Rubbed Bronze	+1,595	+2,220

Please consult **page 7** for the palette of DatesWeiser finishes. Natural stone, non-standard glass and veneer, and other technology options are available. Please email **customerservice@datesweiser.com** for a custom quote. Consult technical information on **page 274** for construction details and technical information.

Highline Rectangular Conference Table

60”x156”/ 12 Person
02R60X156

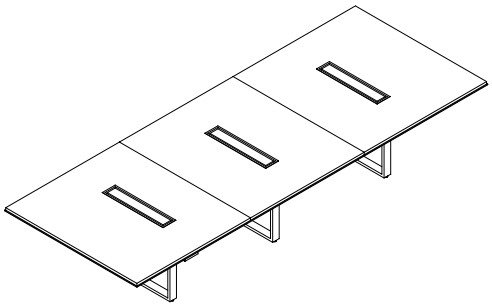

Starting Price: $19,121

60x156 table, veneer Tier 1 top with metal edge, open base, powder coat metal finish

Pattern Number: 02R60X156

Step 1. Top Material	
V	Veneer
G	Glass
C	Corian
Q	Caesarstone

Step 2. Edge Selection/Finish		
AU_ _	Spinneybeck Leather: Acqua	+3,096
MC _ _	Powder Coat	+0
PM01	Polished Chrome	+1,299
PM02	Satin Nickel	+459
PM03	Oil Rubbed Bronze	+956

Step 3. Base Type		
BL	Base Loop	+0

Step 4. Top Finish		
T1 _ _	Veneer Tier 1	+0
T2 _ _	Veneer Tier 2	+1,495
GC _ _	Clear Glass, back painted	+6,435
GE _ _	Etched matte Glass, back painted	+7,735
CS01	Corian Glacier White	+9,425
QS _ _	Caesarstone	+24,375

Step 5. Base Finish		
MC _ _	Powder Coat	+0
PM01	Polished Chrome	+1,299
PM02	Satin Nickel	+459
PM03	Oil Rubbed Bronze	+956

Step 6. Microphone and/or Grommet Accommodations: Optional		
MA _ _	Microphone hole (factory cut)	Qty _ _ x 321 each
GM _ _	2” Grommet Hole (factory cut), liner, lid, in matching metal finish	Qty _ _ x 423 each

Step 7. Power & Connectivity Access: Optional		
TMHW	Tabletop, Metal lid, Hardwired, Qty 3	+14,271
TMPI	Tabletop, Metal lid, Plug In, Qty 3	+12,603
UMHW	Undermount, Hardwired, Qty 6	+6,114
UMPI	Undermount, Plug In, Qty 6	+4,446

Wire Management Column (sold separately)

Required with any technology selection	
Pattern Number: 02WMC6X6	227
Pattern Number: 02WMC10X10	885

Step 1. Metal Finish for Wire Management Column		6x6	10x10
MC _ _	Powder Coat	+0	+0
PM01	Polished Chrome	+1,065	+485
PM02	Satin Nickel	+1,065	+485
PM03	Oil Rubbed Bronze	+1,595	+2,220

Please consult **page 7** for the palette of DatesWeiser finishes. Natural stone, non-standard glass and veneer, and other technology options are available. Please email **customerservice@datesweiser.com** for a custom quote. Consult technical information on **page 274** for construction details and technical information.

Highline Rectangular Conference Table

60”x168”/ 14 Person
02R60X168

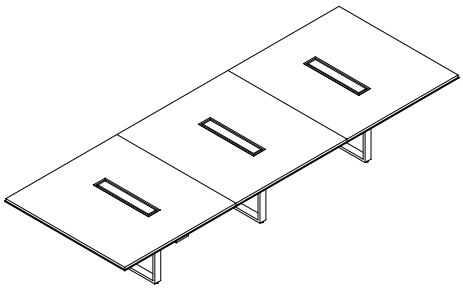

Starting Price: $20,359

60x168 table, veneer Tier 1 top with metal edge, open base, powder coat metal finish

Pattern Number: 02R60X168

Step 1. Top Material	
V	Veneer
G	Glass
C	Corian
Q	Caesarstone

Step 2. Edge Selection/Finish		
AU_ _	Spinneybeck Leather: Acqua	+3,268
MC _ _	Powder Coat	+0
PM01	Polished Chrome	+1,920
PM02	Satin Nickel	+486
PM03	Oil Rubbed Bronze	+1,152

Step 3. Base Type		
BL	Base Loop	+0

Step 4. Top Finish		
T1 _ _	Veneer Tier 1	+0
T2 _ _	Veneer Tier 2	+1,610
GC _ _	Clear Glass, back painted	+6,390
GE _ _	Etched matte Glass, back painted	+8,330
CS01	Corian Glacier White	+10,150
QS _ _	Caesarstone	+26,250

Step 5. Base Finish		
MC _ _	Powder Coat	+0
PM01	Polished Chrome	+1,920
PM02	Satin Nickel	+486
PM03	Oil Rubbed Bronze	+1,152

Step 6. Microphone and/or Grommet Accommodations: Optional		
MA _ _	Microphone hole (factory cut)	Qty _ _ x 321 each
GM _ _	2” Grommet Hole (factory cut), liner, lid, in matching metal finish	Qty _ _ x 423 each

Step 7. Power & Connectivity Access: Optional		
TMHW	Tabletop, Metal lid, Hardwired, Qty 3	+14,271
TMPI	Tabletop, Metal lid, Plug In, Qty 3	+12,603
UMHW	Undermount, Hardwired, Qty 6	+6,114
UMPI	Undermount, Plug In, Qty 6	+4,446

Wire Management Column (sold separately)

Required with any technology selection	
Pattern Number: 02WMC6X6	227
Pattern Number: 02WMC10X10	885

Step 1. Metal Finish for Wire Management Column		6x6	10x10
MC _ _	Powder Coat	+0	+0
PM01	Polished Chrome	+1,065	+485
PM02	Satin Nickel	+1,065	+485
PM03	Oil Rubbed Bronze	+1,595	+2,220

Please consult **page 7** for the palette of DatesWeiser finishes. Natural stone, non-standard glass and veneer, and other technology options are available. Please email **customerservice@datesweiser.com** for a custom quote. Consult technical information on **page 274** for construction details and technical information.

Highline Rectangular Conference Table

60”x180”/ 16 Person
02R60X180

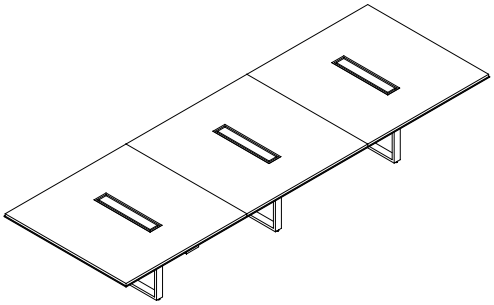

Starting Price: $21,197

60x180 table, veneer Tier 1 top with metal edge, open base, powder coat metal finish

Pattern Number: 02R60X180

Step 1. Top Material	
V	Veneer
G	Glass
C	Corian
Q	Caesarstone

Step 2. Edge Selection/Finish		
AU_ _	Spinneybeck Leather: Acqua	+3,440
MC _ _	Powder Coat	+0
PM01	Polished Chrome	+1,920
PM02	Satin Nickel	+486
PM03	Oil Rubbed Bronze	+1,152

Step 3. Base Type		
BL	Base Loop	+0

Step 4. Top Finish		
T1 _ _	Veneer Tier 1	+0
T2 _ _	Veneer Tier 2	+1,725
GC _ _	Clear Glass, back painted	+7,425
GE _ _	Etched matte Glass, back painted	+8,925
CS01	Corian Glacier White	+10,875
QS _ _	Caesarstone*	+28,125

Step 5. Base Finish		
MC _ _	Powder Coat	+0
PM01	Polished Chrome	+1,920
PM02	Satin Nickel	+486
PM03	Oil Rubbed Bronze	+1,152

Step 6. Microphone and/or Grommet Accommodations: Optional		
MA _ _	Microphone hole (factory cut)	Qty _ _ x 321 each
GM _ _	2” Grommet Hole (factory cut), liner, lid, in matching metal finish	Qty _ _ x 423 each

Step 7. Power & Connectivity Access: Optional		
TMHW	Tabletop, Metal lid, Hardwired, Qty 3	+14,271
TMPI	Tabletop, Metal lid, Plug In, Qty 3	+12,603
UMHW	Undermount, Hardwired, Qty 8	+8,152
UMPI	Undermount, Plug In, Qty 8	+5,928

Wire Management Column (sold separately)

Required with any technology selection	
Pattern Number: 02WMC6X6	227
Pattern Number: 02WMC10X10	885

Step 1. Metal Finish for Wire Management Column		6x6	10x10
MC _ _	Powder Coat	+0	+0
PM01	Polished Chrome	+1,065	+485
PM02	Satin Nickel	+1,065	+485
PM03	Oil Rubbed Bronze	+1,595	+2,220

Please consult **page 7** for the palette of DatesWeiser finishes. Natural stone, non-standard glass and veneer, and other technology options are available. Please email **customerservice@datesweiser.com** for a custom quote. Consult technical information on **page 274** for construction details and technical information.

*Tables with a Caesarstone finish require a 4-section top.

Highline Rectangular Conference Table

60”x192”/ 16 Person
02R60X192

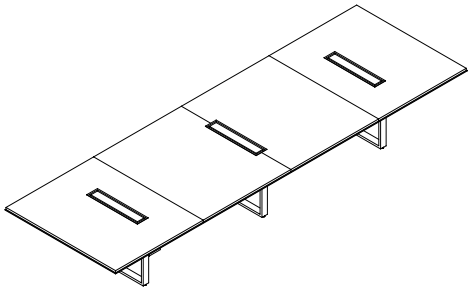

Starting Price: $22,166

60x192 table, veneer Tier 1 top with metal edge, open base, powder coat metal finish

Pattern Number: 02R60X192

Step 1. Top Material	
V	Veneer
G	Glass
C	Corian
Q	Caesarstone

Step 2. Edge Selection/Finish		
AU_ _	Spinneybeck Leather: Acqua	+3,612
MC _ _	Powder Coat	+0
PM01	Polished Chrome	+1,920
PM02	Satin Nickel	+486
PM03	Oil Rubbed Bronze	+1,152

Step 3. Base Type		
BL	Base Loop	+0

Step 4. Top Finish		
T1 _ _	Veneer Tier 1	+0
T2 _ _	Veneer Tier 2	+1,840
GC _ _	Clear Glass, back painted	+7,920
GE _ _	Etched matte Glass, back painted	+9,520
CS01	Corian Glacier White	+11,600
QS _ _	Caesarstone	+30,000

Step 5. Base Finish		
MC _ _	Powder Coat	+0
PM01	Polished Chrome	+1,920
PM02	Satin Nickel	+486
PM03	Oil Rubbed Bronze	+1,152

Step 6. Microphone and/or Grommet Accommodations: Optional		
MA _ _	Microphone hole (factory cut)	Qty _ _ x 321 each
GM _ _	2” Grommet Hole (factory cut), liner, lid, in matching metal finish	Qty _ _ x 423 each

Step 7. Power & Connectivity Access: Optional		
TMHW	Tabletop, Metal lid, Hardwired, Qty 3	+14,271
TMPI	Tabletop, Metal lid, Plug In, Qty 3	+12,603
UMHW	Undermount, Hardwired, Qty 8	+8,152
UMPI	Undermount, Plug In, Qty 8	+5,928

Wire Management Column (sold separately)

Required with any technology selection

Pattern Number: 02WMC6X6	227
Pattern Number: 02WMC10X10	885

Step 1. Metal Finish for Wire Management Column		6x6	10x10
MC _ _	Powder Coat	+0	+0
PM01	Polished Chrome	+1,065	+485
PM02	Satin Nickel	+1,065	+485
PM03	Oil Rubbed Bronze	+1,595	+2,220

Please consult **page 7** for the palette of DatesWeiser finishes. Natural stone, non-standard glass and veneer, and other technology options are available. Please email **customerservice@datesweiser.com** for a custom quote. Consult technical information on **page 274** for construction details and technical information.

Highline Rectangular Conference Table

60”x204”/ 16 Person
02R60X204

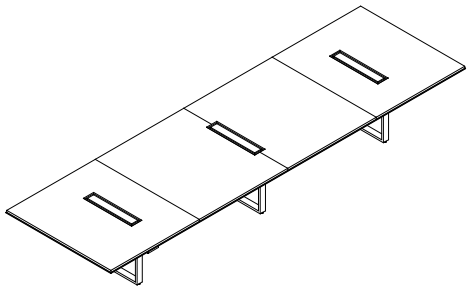

Starting Price: $23,118

60x204 table, veneer Tier 1 top with metal edge, open base, powder coat metal finish

Pattern Number: 02R60X204

Step 1. Top Material	
V	Veneer
G	Glass
C	Corian
Q	Caesarstone

Step 2. Edge Selection/Finish		
AU_ _	Spinneybeck Leather: Acqua	+3,784
MC _ _	Powder Coat	+0
PM01	Polished Chrome	+1,920
PM02	Satin Nickel	+486
PM03	Oil Rubbed Bronze	+1,152

Step 3. Base Type		
BL	Base Loop	+0

Step 4. Top Finish		
T1 _ _	Veneer Tier 1	+0
T2 _ _	Veneer Tier 2	+1,955
GC _ _	Clear Glass, back painted	+8,415
GE _ _	Etched matte Glass, back painted	+10,115
CS01	Corian Glacier White	+12,325
QS _ _	Caesarstone	+31,875

Step 5. Base Finish		
MC _ _	Powder Coat	+0
PM01	Polished Chrome	+1,920
PM02	Satin Nickel	+486
PM03	Oil Rubbed Bronze	+1,152

Step 6. Microphone and/or Grommet Accommodations: Optional		
MA _ _	Microphone hole (factory cut)	Qty _ _ x 321 each
GM _ _	2” Grommet Hole (factory cut), liner, lid, in matching metal finish	Qty _ _ x 423 each

Step 7. Power & Connectivity Access: Optional		
TMHW	Tabletop, Metal lid, Hardwired, Qty 3	+14,271
TMPI	Tabletop, Metal lid, Plug In, Qty 3	+12,603
UMHW	Undermount, Hardwired, Qty 8	+8,152
UMPI	Undermount, Plug In, Qty 8	+5,928

Wire Management Column (sold separately)

Required with any technology selection	
Pattern Number: 02WMC6X6	227
Pattern Number: 02WMC10X10	885

Step 1. Metal Finish for Wire Management Column		6x6	10x10
MC _ _	Powder Coat	+0	+0
PM01	Polished Chrome	+1,065	+485
PM02	Satin Nickel	+1,065	+485
PM03	Oil Rubbed Bronze	+1,595	+2,220

Please consult **page 7** for the palette of DatesWeiser finishes. Natural stone, non-standard glass and veneer, and other technology options are available. Please email **customerservice@datesweiser.com** for a custom quote. Consult technical information on **page 274** for construction details and technical information.

Highline Rectangular Conference Table

60”x216”/ 18 Person
02R60X216

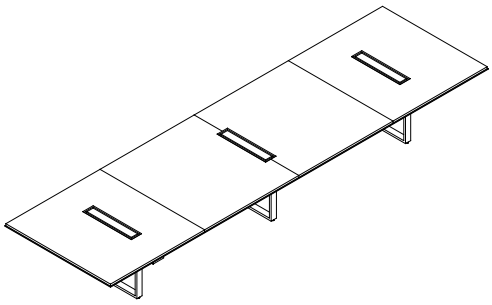

Starting Price: $23,937

60x216 table, veneer Tier 1 top with metal edge, open base, powder coat metal finish

Pattern Number: 02R60X216

Step 1. Top Material	
V	Veneer
G	Glass
C	Corian
Q	Caesarstone

Step 2. Edge Selection/Finish		
AU_ _	Spinneybeck Leather: Acqua	+3,956
MC _ _	Powder Coat	+0
PM01	Polished Chrome	+1,920
PM02	Satin Nickel	+486
PM03	Oil Rubbed Bronze	+1,152

Step 3. Base Type		
BL	Base Loop	+0

Step 4. Top Finish		
T1 _ _	Veneer Tier 1	+0
T2 _ _	Veneer Tier 2	+2,070
GC _ _	Clear Glass, back painted	+8,910
GE _ _	Etched matte Glass, back painted	+10,710
CS01	Corian Glacier White	+13,050
QS _ _	Caesarstone	+33,750

Step 5. Base Finish		
MC _ _	Powder Coat	+0
PM01	Polished Chrome	+1,920
PM02	Satin Nickel	+486
PM03	Oil Rubbed Bronze	+1,152

Step 6. Microphone and/or Grommet Accommodations: Optional		
MA _ _	Microphone hole (factory cut)	Qty _ _ x 321 each
GM _ _	2” Grommet Hole (factory cut) liner, lid, in matching metal finish	Qty _ _ x 423 each

Step 7. Power & Connectivity Access: Optional		
TMHW	Tabletop, Metal lid, Hardwired, Qty 3	+14,271
TMPI	Tabletop, Metal lid, Plug In, Qty 3	+12,603
UMHW	Undermount, Hardwired, Qty 8	+8,152
UMPI	Undermount, Plug In, Qty 8	+5,928

Wire Management Column (sold separately)

Required with any technology selection	
Pattern Number: 02WMC6X6	227
Pattern Number: 02WMC10X10	885

Step 1. Metal Finish for Wire Management Column		6x6	10x10
MC _ _	Powder Coat	+0	+0
PM01	Polished Chrome	+1,065	+485
PM02	Satin Nickel	+1,065	+485
PM03	Oil Rubbed Bronze	+1,595	+2,220

Please consult **page 7** for the palette of DatesWeiser finishes. Natural stone, non-standard glass and veneer, and other technology options are available. Please email **customerservice@datesweiser.com** for a custom quote. Consult technical information on **page 274** for construction details and technical information.

Highline Rectangular Conference Table

60”x228”/ 18 Person
02R60X228

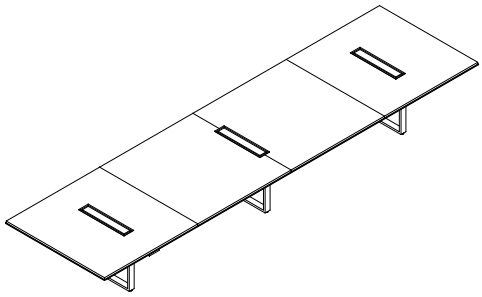

Starting Price: $24,809

60x228 table, veneer Tier 1 top with metal edge, open base, powder coat metal finish

Pattern Number: 02R60X228

Step 1. Top Material	
V	Veneer
G	Glass
C	Corian
Q	Caesarstone

Step 2. Edge Selection/Finish		
AU_ _	Spinneybeck Leather: Acqua	+4,128
MC _ _	Powder Coat	+0
PM01	Polished Chrome	+1,920
PM02	Satin Nickel	+486
PM03	Oil Rubbed Bronze	+1,152

Step 3. Base Type		
BL	Base Loop	+0

Step 4. Top Finish		
T1 _ _	Veneer Tier 1	+0
T2 _ _	Veneer Tier 2	+2,185
GC _ _	Clear Glass, back painted	+9,405
GE _ _	Etched matte Glass, back painted	+11,305
CS01	Corian Glacier White	+13,775
QS _ _	Caesarstone*	+35,625

Step 5. Base Finish		
MC _ _	Powder Coat	+0
PM01	Polished Chrome	+1,920
PM02	Satin Nickel	+486
PM03	Oil Rubbed Bronze	+1,152

Step 6. Microphone and/or Grommet Accommodations: Optional		
MA _ _	Microphone hole (factory cut)	Qty _ _ x 321 each
GM _ _	2” Grommet Hole (factory cut), liner, lid, in matching metal finish	Qty _ _ x 423 each

Step 7. Power & Connectivity Access: Optional		
TMHW	Tabletop, Metal lid, Hardwired, Qty 3	+14,271
TMPI	Tabletop, Metal lid, Plug In, Qty 3	+12,603
UMHW	Undermount, Hardwired, Qty 8	+8,152
UMPI	Undermount, Plug In, Qty 8	+5,928

Wire Management Column (sold separately)

Required with any technology selection	
Pattern Number: 02WMC6X6	227
Pattern Number: 02WMC10X10	885

Step 1. Metal Finish for Wire Management Column		6x6	10x10
MC _ _	Powder Coat	+0	+0
PM01	Polished Chrome	+1,065	+485
PM02	Satin Nickel	+1,065	+485
PM03	Oil Rubbed Bronze	+1,595	+2,220

Please consult **page 7** for the palette of DatesWeiser finishes. Natural stone, non-standard glass and veneer, and other technology options are available. Please email **customerservice@datesweiser.com** for a custom quote. Consult technical information on **page 274** for construction details and technical information.

*Tables with a Caesarstone finish require a 5-section top.

Highline Rectangular Conference Table

60”x240”/ 20 Person
02R60X240

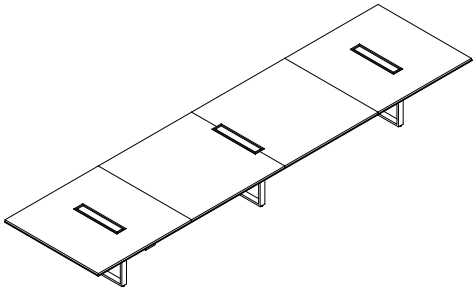

Starting Price: $25,703

60x240 table, veneer Tier 1 top with metal edge, open base, powder coat metal finish

Pattern Number: 02R60X240

Step 1. Top Material	
V	Veneer
G	Glass
C	Corian
Q	Caesarstone

Step 2. Edge Selection/Finish		
AU_ _	Spinneybeck Leather: Acqua	+4,300
MC _ _	Powder Coat	+0
PM01	Polished Chrome	+1,920
PM02	Satin Nickel	+486
PM03	Oil Rubbed Bronze	+1,152

Step 3. Base Type		
BL	Base Loop	+0

Step 4. Top Finish		
T1 _ _	Veneer Tier 1	+0
T2 _ _	Veneer Tier 2	+2,300
GC _ _	Clear Glass, back painted	+9,900
GE _ _	Etched matte Glass, back painted	+11,900
CS01	Corian Glacier White	+14,500
QS _ _	Caesarstone*	+37,500

Step 5. Base Finish		
MC _ _	Powder Coat	+0
PM01	Polished Chrome	+1,920
PM02	Satin Nickel	+486
PM03	Oil Rubbed Bronze	+1,152

Step 6. Microphone and/or Grommet Accommodations: Optional		
MA _ _	Microphone hole (factory cut)	Qty _ _ x 321 each
GM _ _	2” Grommet Hole (factory cut), liner, lid, in matching metal finish	Qty _ _ x 423 each

Step 7. Power & Connectivity Access: Optional		
TMHW	Tabletop, Metal lid, Hardwired, Qty 3	+14,271
TMPI	Tabletop, Metal lid, Plug In, Qty 3	+12,603
UMHW	Undermount, Hardwired, Qty 10	+10,190
UMPI	Undermount, Plug In, Qty 10	+7,410

Wire Management Column (sold separately)

Required with any technology selection	
Pattern Number: 02WMC6X6	227
Pattern Number: 02WMC10X10	885

Step 1. Metal Finish for Wire Management Column		6x6	10x10
MC _ _	Powder Coat	+0	+0
PM01	Polished Chrome	+1,065	+485
PM02	Satin Nickel	+1,065	+485
PM03	Oil Rubbed Bronze	+1,595	+2,220

Please consult **page 7** for the palette of DatesWeiser finishes. Natural stone, non-standard glass and veneer, and other technology options are available. Please email **customerservice@datesweiser.com** for a custom quote. Consult technical information on **page 274** for construction details and technical information.

*Tables with a Caesarstone finish require a 5-section top.

Highline Rectangular Conference Tables Index

72″ width

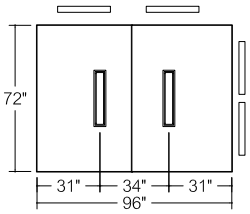

02R72X96
8 Person Table

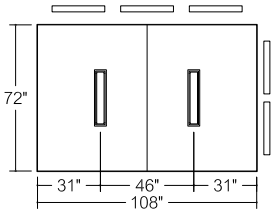

02R72X108
10 Person Table

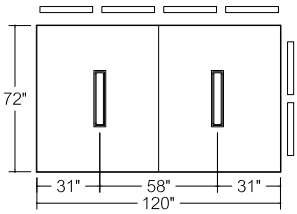

02R72X120
12 Person Table

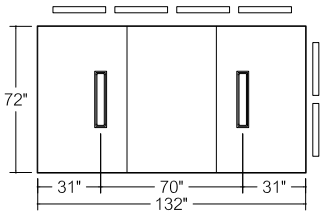

02R72X132
12 Person Table

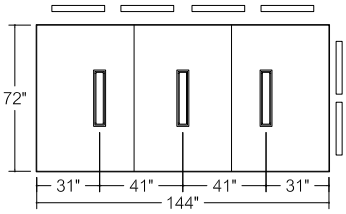

02R72X144
12 Person Table

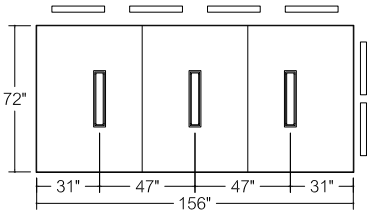

02R72X156
12 Person Table

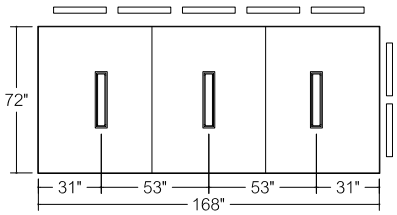

02R72X168
14 Person Table

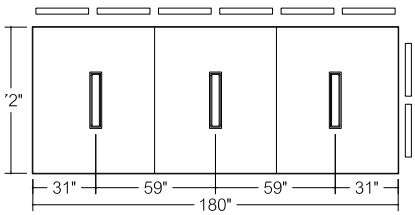

02R72X180
16 Person Table

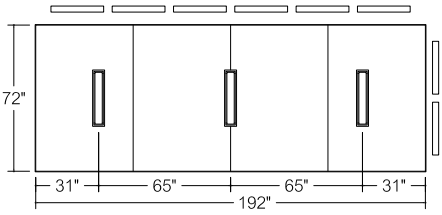

02R72X192
16 Person Table

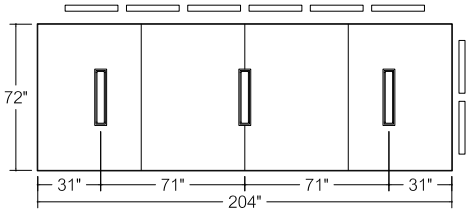

02R72X204
16 Person Table

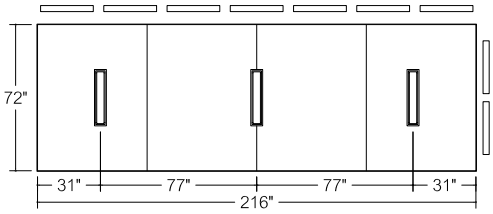

02R72X216
18 Person Table

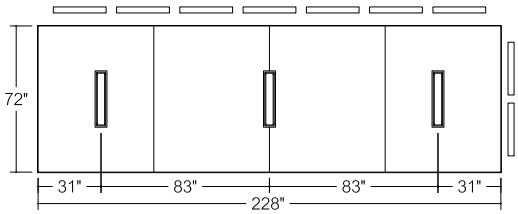

02R72X228
18 Person Table

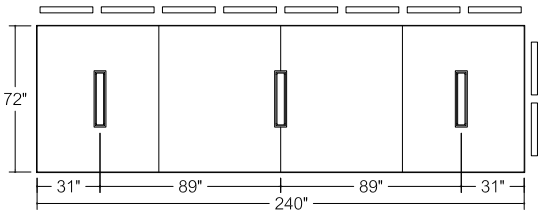

02R72X240
20 Person Table

Highline Rectangular Conference Table

72”x96”/ 8 Person
02R72X96

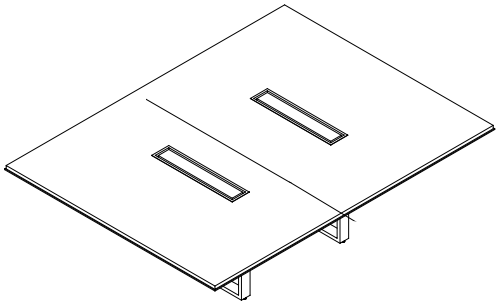

Starting Price: $14,232

72x96 table, veneer Tier 1 top with metal edge, open base, powder coat metal finish

Pattern Number: 02R72X96

Step 1. Top Material	
V	Veneer
G	Glass
C	Corian
Q	Caesarstone

Step 2. Edge Selection/Finish		
AU_ _	Spinneybeck Leather: Acqua	+2,408
MC _ _	Powder Coat	+0
PM01	Polished Chrome	+1,139
PM02	Satin Nickel	+323
PM03	Oil Rubbed Bronze	+1,058

Step 3. Base Type		
BL	Base Loop	+0

Step 4. Top Finish		
T1 _ _	Veneer Tier 1	+0
T2 _ _	Veneer Tier 2	+1,104
GC _ _	Clear Glass, back painted	+4,752
GE _ _	Etched matte Glass, back painted	+5,712
CS01	Corian Glacier White	+6,960
QS _ _	Caesarstone	+18,000

Step 5. Base Finish		
MC _ _	Powder Coat	+0
PM01	Polished Chrome	+1,139
PM02	Satin Nickel	+323
PM03	Oil Rubbed Bronze	+1,058

Step 6. Microphone and/or Grommet Accommodations: Optional		
MA _ _	Microphone hole (factory cut)	Qty _ _ x 321 each
GM _ _	2” Grommet Hole (factory cut), liner, lid, in matching metal finish	Qty _ _ x 423 each

Step 7. Power & Connectivity Access: Optional		
TMHW	Tabletop, Metal lid, Hardwired, Qty 2	+9,514
TMPI	Tabletop, Metal lid, Plug In, Qty 2	+8,402
UMHW	Undermount, Hardwired, Qty 4	+4,076
UMPI	Undermount, Plug In, Qty 4	+2,964

Wire Management Column (sold separately)

Required with any technology selection	
Pattern Number: 02WMC6X6	227
Pattern Number: 02WMC10X10	885

Step 1. Metal Finish for Wire Management Column		6x6	10x10
MC _ _	Powder Coat	+0	+0
PM01	Polished Chrome	+1,065	+485
PM02	Satin Nickel	+1,065	+485
PM03	Oil Rubbed Bronze	+1,595	+2,220

Please consult **page 7** for the palette of DatesWeiser finishes. Natural stone, non-standard glass and veneer, and other technology options are available. Please email **customerservice@datesweiser.com** for a custom quote. Consult technical information on **page 274** for construction details and technical information.

Highline Rectangular Conference Table

72”x108”/ 10 Person
02R72X108

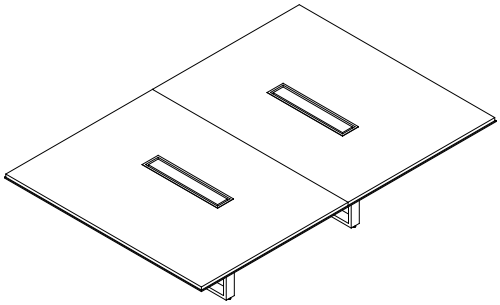

Starting Price: $15,346

72x108 table, veneer Tier 1 top with metal edge, open base, powder coat metal finish

Pattern Number: 02R72X108

Step 1. Top Material	
V	Veneer
G	Glass
C	Corian
Q	Caesarstone

Step 2. Edge Selection/Finish		
AU_ _	Spinneybeck Leather: Acqua	+2,580
MC _ _	Powder Coat	+0
PM01	Polished Chrome	+1,139
PM02	Satin Nickel	+323
PM03	Oil Rubbed Bronze	+1,058

Step 3. Base Type		
BL	Base Loop	+0

Step 4. Top Finish		
T1 _ _	Veneer Tier 1	+0
T2 _ _	Veneer Tier 2	+1,242
GC _ _	Clear Glass, back painted	+5,346
GE _ _	Etched matte Glass, back painted	+6,426
CS01	Corian Glacier White	+7,830
QS _ _	Caesarstone	+20,250

Step 5. Base Finish		
MC _ _	Powder Coat	+0
PM01	Polished Chrome	+1,139
PM02	Satin Nickel	+323
PM03	Oil Rubbed Bronze	+1,058

Step 6. Microphone and/or Grommet Accommodations: Optional		
MA _ _	Microphone hole (factory cut)	Qty _ _ x 321 each
GM _ _	2” Grommet Hole (factory cut), liner, lid, in matching metal finish	Qty _ _ x 423 each

Step 7. Power & Connectivity Access: Optional		
TMHW	Tabletop, Metal lid, Hardwired, Qty 2	+9,514
TMPI	Tabletop, Metal lid, Plug In, Qty 2	+8,402
UMHW	Undermount, Hardwired, Qty 4	+4,076
UMPI	Undermount, Plug In, Qty 4	+2,964

Wire Management Column (sold separately)

Required with any technology selection	
Pattern Number: 02WMC6X6	227
Pattern Number: 02WMC10X10	885

Step 1. Metal Finish for Wire Management Column		6x6	10x10
MC _ _	Powder Coat	+0	+0
PM01	Polished Chrome	+1,065	+485
PM02	Satin Nickel	+1,065	+485
PM03	Oil Rubbed Bronze	+1,595	+2,220

Please consult **page 7** for the palette of DatesWeiser finishes. Natural stone, non-standard glass and veneer, and other technology options are available. Please email **customerservice@datesweiser.com** for a custom quote. Consult technical information on **page 274** for construction details and technical information.

Highline Rectangular Conference Table

72”x120”/ 12 Person
02R72X120

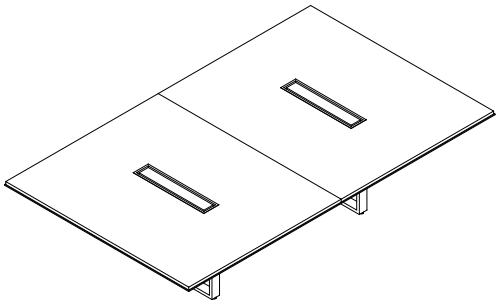

Starting Price: $16,405

72x120 table, veneer Tier 1 top with metal edge, open base, powder coat metal finish

Pattern Number: 02R72X120

Step 1. Top Material	
V	Veneer
G	Glass
C	Corian
Q	Caesarstone

Step 2. Edge Selection/Finish		
AU_ _	Spinneybeck Leather: Acqua	+2,752
MC _ _	Powder Coat	+0
PM01	Polished Chrome	+1,139
PM02	Satin Nickel	+323
PM03	Oil Rubbed Bronze	+1,058

Step 3. Base Type		
BL	Base Loop	+0

Step 4. Top Finish		
T1 _ _	Veneer Tier 1	+0
T2 _ _	Veneer Tier 2	+1,380
GC _ _	Clear Glass, back painted	+5,940
GE _ _	Etched matte Glass, back painted	+7,140
CS01	Corian Glacier White	+8,700
QS _ _	Caesarstone	+22,500

Step 5. Base Finish		
MC _ _	Powder Coat	+0
PM01	Polished Chrome	+1,139
PM02	Satin Nickel	+323
PM03	Oil Rubbed Bronze	+1,058

Step 6. Microphone and/or Grommet Accommodations: Optional		
MA _ _	Microphone hole (factory cut)	Qty _ _x 321 each
GM _ _	2” Grommet Hole (factory cut), liner, lid, in matching metal finish	Qty _ _ x 423 each

Step 7. Power & Connectivity Access: Optional		
TMHW	Tabletop, Metal lid, Hardwired, Qty 2	+9,514
TMPI	Tabletop, Metal lid, Plug In, Qty 2	+8,402
UMHW	Undermount, Hardwired, Qty 6	+6,114
UMPI	Undermount, Plug In, Qty 6	+4,446

Wire Management Column (sold separately)

Required with any technology selection	
Pattern Number: 02WMC6X6	227
Pattern Number: 02WMC10X10	885

Step 1. Metal Finish for Wire Management Column		6x6	10x10
MC _ _	Powder Coat	+0	+0
PM01	Polished Chrome	+1,065	+485
PM02	Satin Nickel	+1,065	+485
PM03	Oil Rubbed Bronze	+1,595	+2,220

Please consult **page 7** for the palette of DatesWeiser finishes. Natural stone, non-standard glass and veneer, and other technology options are available. Please email **customerservice@datesweiser.com** for a custom quote. Consult technical information on **page 274** for construction details and technical information.

Highline Rectangular Conference Table

72”x132”/ 12 Person
02R72X132

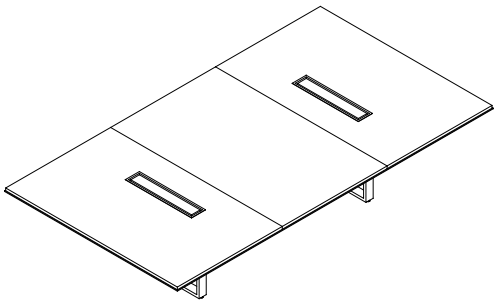

Starting Price: $19,046

72x132 table, veneer Tier 1 top with metal edge, open base, powder coat metal finish

Pattern Number: 02R72X132

Step 1. Top Material	
V	Veneer
G	Glass
C	Corian
Q	Caesarstone

Step 2. Edge Selection/Finish		
AU_ _	Spinneybeck Leather: Acqua	+2,924
MC _ _	Powder Coat	+0
PM01	Polished Chrome	+1,299
PM02	Satin Nickel	+459
PM03	Oil Rubbed Bronze	+1,584

Step 3. Base Type		
BL	Base Loop	+0

Step 4. Top Finish		
T1 _ _	Veneer Tier 1	+0
T2 _ _	Veneer Tier 2	+1,518
GC _ _	Clear Glass, back painted	+6,534
GE _ _	Etched matte Glass, back painted	+7,854
CS01	Corian Glacier White	+9,570
QS _ _	Caesarstone	+24,750

Step 5. Base Finish		
MC _ _	Powder Coat	+0
PM01	Polished Chrome	+1,299
PM02	Satin Nickel	+459
PM03	Oil Rubbed Bronze	+1,584

Step 6. Microphone and/or Grommet Accommodations: Optional		
MA _ _	Microphone hole (factory cut)	Qty _ _ x 321 each
GM _ _	2” Grommet Hole (factory cut), liner, lid, in matching metal finish	Qty _ _ x 423 each

Step 7. Power & Connectivity Access: Optional		
TMHW	Tabletop, Metal lid, Hardwired, Qty 2	+9,514
TMPI	Tabletop, Metal lid, Plug In, Qty 2	+8,402
UMHW	Undermount, Hardwired, Qty 6	+6,114
UMPI	Undermount, Plug In, Qty 6	+4,446

Wire Management Column (sold separately)

Required with any technology selection	
Pattern Number: 02WMC6X6	227
Pattern Number: 02WMC10X10	885

Step 1. Metal Finish for Wire Management Column		6x6	10x10
MC _ _	Powder Coat	+0	+0
PM01	Polished Chrome	+1,065	+485
PM02	Satin Nickel	+1,065	+485
PM03	Oil Rubbed Bronze	+1,595	+2,220

Please consult **page 7** for the palette of DatesWeiser finishes. Natural stone, non-standard glass and veneer, and other technology options are available. Please email **customerservice@datesweiser.com** for a custom quote. Consult technical information on **page 274** for construction details and technical information.

Highline Rectangular Conference Table

72”x144”/ 12 Person
02R72X144

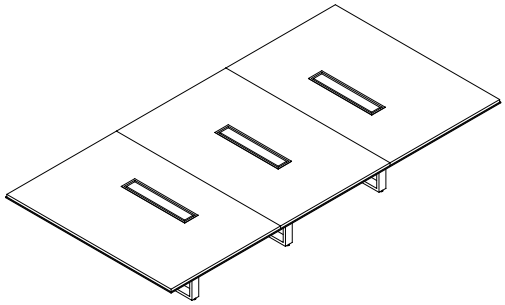

Starting Price: $20,439

72x144 table, veneer Tier 1 top with metal edge, open base, powder coat metal finish

Pattern Number: 02R72X144

Step 1. Top Material	
V	Veneer
G	Glass
C	Corian
Q	Caesarstone

Step 2. Edge Selection/Finish		
AU_ _	Spinneybeck Leather: Acqua	+3,096
MC _ _	Powder Coat	+0
PM01	Polished Chrome	+1,299
PM02	Satin Nickel	+459
PM03	Oil Rubbed Bronze	+1,584

Step 3. Base Type		
BL	Base Loop	+0

Step 4. Top Finish		
T1 _ _	Veneer Tier 1	+0
T2 _ _	Veneer Tier 2	+1,656
GC _ _	Clear Glass, back painted	+7,128
GE _ _	Etched matte Glass, back painted	+8,568
CS01	Corian Glacier White	+10,440
QS _ _	Caesarstone	+27,000

Step 5. Base Finish		
MC _ _	Powder Coat	+0
PM01	Polished Chrome	+1,299
PM02	Satin Nickel	+459
PM03	Oil Rubbed Bronze	+1,584

Step 6. Microphone and/or Grommet Accommodations: Optional		
MA _ _	Microphone hole (factory cut)	Qty _ _ x 321 each
GM _ _	2” Grommet Hole (factory cut), liner, lid, in matching metal finish	Qty _ _ x 423 each

Step 7. Power & Connectivity Access: Optional		
TMHW	Tabletop, Metal lid, Hardwired, Qty 3	+14,271
TMPI	Tabletop, Metal lid, Plug In, Qty 3	+12,603
UMHW	Undermount, Hardwired, Qty 6	+6,114
UMPI	Undermount, Plug In, Qty 6	+4,446

Wire Management Column (sold separately)

Required with any technology selection	
Pattern Number: 02WMC6X6	227
Pattern Number: 02WMC10X10	885

Step 1. Metal Finish for Wire Management Column		6x6	10x10
MC _ _	Powder Coat	+0	+0
PM01	Polished Chrome	+1,065	+485
PM02	Satin Nickel	+1,065	+485
PM03	Oil Rubbed Bronze	+1,595	+2,220

Please consult **page 7** for the palette of DatesWeiser finishes. Natural stone, non-standard glass and veneer, and other technology options are available. Please email **customerservice@datesweiser.com** for a custom quote. Consult technical information on **page 274** for construction details and technical information.

Highline Rectangular Conference Table

72”x156”/ 12 Person
02R72X156

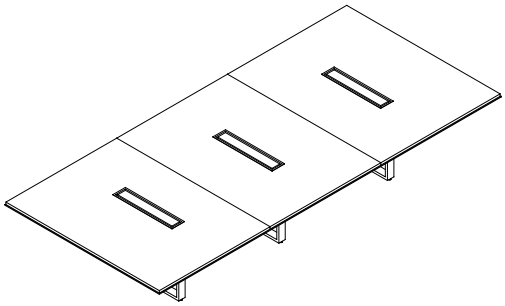

Starting Price: $21,721

72x156 table, veneer Tier 1 top with metal edge, open base, powder coat metal finish

Pattern Number: 02R72X156

Step 1. Top Material	
V	Veneer
G	Glass
C	Corian
Q	Caesarstone

Step 2. Edge Selection/Finish		
AU_ _	Spinneybeck Leather: Acqua	+3,268
MC _ _	Powder Coat	+0
PM01	Polished Chrome	+1,299
PM02	Satin Nickel	+459
PM03	Oil Rubbed Bronze	+1,584

Step 3. Base Type		
BL	Base Loop	+0

Step 4. Top Finish		
T1 _ _	Veneer Tier 1	+0
T2 _ _	Veneer Tier 2	+1,794
GC _ _	Clear Glass, back painted	+7,722
GE _ _	Etched matte Glass, back painted	+9,282
CS01	Corian Glacier White	+11,310
QS _ _	Caesarstone	+29,250

Step 5. Base Finish		
MC _ _	Powder Coat	+0
PM01	Polished Chrome	+1,299
PM02	Satin Nickel	+459
PM03	Oil Rubbed Bronze	+1,584

Step 6. Microphone and/or Grommet Accommodations: Optional		
MA _ _	Microphone hole (factory cut)	Qty _ _ x 321 each
GM _ _	2” Grommet Hole (factory cut), liner, lid, in matching metal finish	Qty _ _ x 423 each

Step 7. Power & Connectivity Access: Optional		
TMHW	Tabletop, Metal lid, Hardwired, Qty 3	+14,271
TMPI	Tabletop, Metal lid, Plug In, Qty 3	+12,603
UMHW	Undermount, Hardwired, Qty 6	+6,114
UMPI	Undermount, Plug In, Qty 6	+4,446

Wire Management Column (sold separately)

Required with any technology selection	
Pattern Number: 02WMC6X6	227
Pattern Number: 02WMC10X10	885

Step 1. Metal Finish for Wire Management Column		6x6	10x10
MC _ _	Powder Coat	+0	+0
PM01	Polished Chrome	+1,065	+485
PM02	Satin Nickel	+1,065	+485
PM03	Oil Rubbed Bronze	+1,595	+2,220

Please consult **page 7** for the palette of DatesWeiser finishes. Natural stone, non-standard glass and veneer, and other technology options are available. Please email **customerservice@datesweiser.com** for a custom quote. Consult technical information on **page 274** for construction details and technical information.

Highline Rectangular Conference Table

72”x168”/ 14 Person
02R72X168

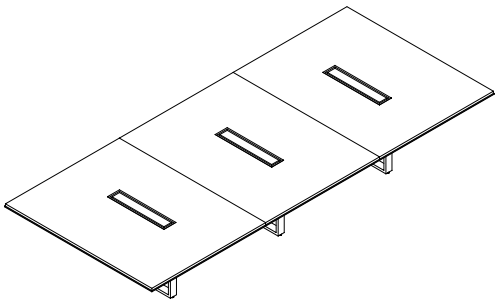

Starting Price: $22,790

72x168 table, veneer Tier 1 top with metal edge, open base, powder coat metal finish

Pattern Number: 02R72X168

Step 1. Top Material	
V	Veneer
G	Glass
C	Corian
Q	Caesarstone

Step 2. Edge Selection/Finish		
AU_ _	Spinneybeck Leather: Acqua	+3,440
MC _ _	Powder Coat	+0
PM01	Polished Chrome	+1,920
PM02	Satin Nickel	+486
PM03	Oil Rubbed Bronze	+1,152

Step 3. Base Type		
BL	Base Loop	+0

Step 4. Top Finish		
T1 _ _	Veneer Tier 1	+0
T2 _ _	Veneer Tier 2	+1,932
GC _ _	Clear Glass, back painted	+8,316
GE _ _	Etched matte Glass, back painted	+9,996
CS01	Corian Glacier White	+12,180
QS _ _	Caesarstone	+31,500

Step 5. Base Finish		
MC _ _	Powder Coat	+0
PM01	Polished Chrome	+1,920
PM02	Satin Nickel	+486
PM03	Oil Rubbed Bronze	+1,152

Step 6. Microphone and/or Grommet Accommodations: Optional		
MA _ _	Microphone hole (factory cut)	Qty_ _ x 321 each
GM _ _	2” Grommet Hole (factory cut), liner, lid, in matching metal finish	Qty_ _ x 423 each

Step 7. Power & Connectivity Access: Optional		
TMHW	Tabletop, Metal lid, Hardwired, Qty 3	+14,271
TMPI	Tabletop, Metal lid, Plug In, Qty 3	+12,603
UMHW	Undermount, Hardwired, Qty 6	+6,114
UMPI	Undermount, Plug In, Qty 6	+4,446

Wire Management Column (sold separately)

Required with any technology selection	
Pattern Number: 02WMC6X6	227
Pattern Number: 02WMC10X10	885

Step 1. Metal Finish for Wire Management Column		6x6	10x10
MC _ _	Powder Coat	+0	+0
PM01	Polished Chrome	+1,065	+485
PM02	Satin Nickel	+1,065	+485
PM03	Oil Rubbed Bronze	+1,595	+2,220

Please consult **page 7** for the palette of DatesWeiser finishes. Natural stone, non-standard glass and veneer, and other technology options are available. Please email **customerservice@datesweiser.com** for a custom quote. Consult technical information on **page 274** for construction details and technical information.

Highline Rectangular Conference Table

72”x180”/ 16 Person
02R72X180

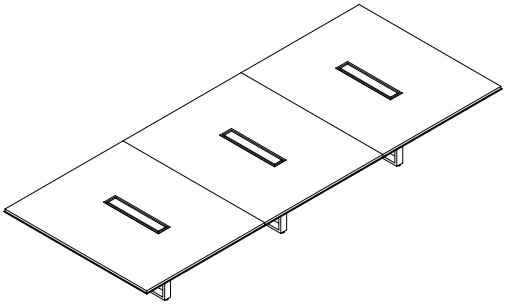

Starting Price: $23,817

72x180 table, veneer Tier 1 top with metal edge, open base, powder coat metal finish

Pattern Number: 02R72X180

Step 1. Top Material	
V	Veneer
G	Glass
C	Corian
Q	Caesarstone

Step 2. Edge Selection/Finish		
AU_ _	Spinneybeck Leather: Acqua	+3,612
MC _ _	Powder Coat	+0
PM01	Polished Chrome	+1,920
PM02	Satin Nickel	+486
PM03	Oil Rubbed Bronze	+1,152

Step 3. Base Type		
BL	Base Loop	+0

Step 4. Top Finish		
T1 _ _	Veneer Tier 1	+0
T2 _ _	Veneer Tier 2	+2,070
GC _ _	Clear Glass, back painted	+8,910
GE _ _	Etched matte Glass, back painted	+10,710
CS01	Corian Glacier White	+13,050
QS _ _	Caesarstone*	+33,750

Step 5. Base Finish		
MC _ _	Powder Coat	+0
PM01	Polished Chrome	+1,920
PM02	Satin Nickel	+486
PM03	Oil Rubbed Bronze	+1,152

Step 6. Microphone and/or Grommet Accommodations: Optional		
MA _ _	Microphone hole (factory cut)	Qty _ _ x 321 each
GM _ _	2” Grommet Hole (factory cut), liner, lid, in matching metal finish	Qty _ _ x 423 each

Step 7. Power & Connectivity Access: Optional		
TMHW	Tabletop, Metal lid, Hardwired, Qty 3	+14,271
TMPI	Tabletop, Metal lid, Plug In, Qty 3	+12,603
UMHW	Undermount, Hardwired, Qty 8	+8,152
UMPI	Undermount, Plug In, Qty 8	+5,928

Wire Management Column (sold separately)

Required with any technology selection	
Pattern Number: 02WMC6X6	227
Pattern Number: 02WMC10X10	885

Step 1. Metal Finish for Wire Management Column		6x6	10x10
MC _ _	Powder Coat	+0	+0
PM01	Polished Chrome	+1,065	+485
PM02	Satin Nickel	+1,065	+485
PM03	Oil Rubbed Bronze	+1,595	+2,220

Please consult **page 7** for the palette of DatesWeiser finishes. Natural stone, non-standard glass and veneer, and other technology options are available. Please email **customerservice@datesweiser.com** for a custom quote. Consult technical information on **page 274** for construction details and technical information.

*Tables with a Caesarstone finish require a 4-section top.

Highline Rectangular Conference Table

72”x192”/ 16 Person
02R72X192

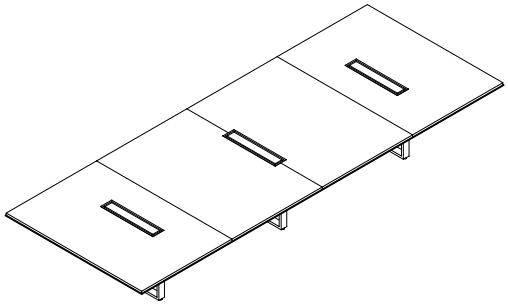

Starting Price: $24,923

72x192 table, veneer Tier 1 top with metal edge, open base, powder coat metal finish

Pattern Number: 02R72X192

Step 1. Top Material	
V	Veneer
G	Glass
C	Corian
Q	Caesarstone

Step 2. Edge Selection/Finish		
AU_ _	Spinneybeck Leather: Acqua	+3,784
MC _ _	Powder Coat	+0
PM01	Polished Chrome	+1,920
PM02	Satin Nickel	+486
PM03	Oil Rubbed Bronze	+1,152

Step 3. Base Type		
BL	Base Loop	+0

Step 4. Top Finish		
T1 _ _	Veneer Tier 1	+0
T2 _ _	Veneer Tier 2	+2,208
GC _ _	Clear Glass, back painted	+9,504
GE _ _	Etched matte Glass, back painted	+11,424
CS01	Corian Glacier White	+13,920
QS_ _	Caesarstone	+36,000

Step 5. Base Finish		
MC _ _	Powder Coat	+0
PM01	Polished Chrome	+1,920
PM02	Satin Nickel	+486
PM03	Oil Rubbed Bronze	+1,152

Step 6. Microphone and/or Grommet Accommodations: Optional		
MA _ _	Microphone hole (factory cut)	Qty _ _ x 321 each
GM _ _	2” Grommet Hole (factory cut), liner, lid, in matching metal finish	Qty _ _ x 423 each

Step 7. Power & Connectivity Access: Optional		
TMHW	Tabletop, Metal lid, Hardwired, Qty 3	+14,271
TMPI	Tabletop, Metal lid, Plug In, Qty 3	+12,603
UMHW	Undermount, Hardwired, Qty 8	+8,152
UMPI	Undermount, Plug In, Qty 8	+5,928

Wire Management Column (sold separately)

Required with any technology selection	
Pattern Number: 02WMC6X6	227
Pattern Number: 02WMC10X10	885

Step 1. Metal Finish for Wire Management Column		6x6	10x10
MC _ _	Powder Coat	+0	+0
PM01	Polished Chrome	+1,065	+485
PM02	Satin Nickel	+1,065	+485
PM03	Oil Rubbed Bronze	+1,595	+2,220

Please consult **page 7** for the palette of DatesWeiser finishes. Natural stone, non-standard glass and veneer, and other technology options are available. Please email **customerservice@datesweiser.com** for a custom quote. Consult technical information on **page 274** for construction details and technical information.

Highline Rectangular Conference Table

72”x204”/ 16 Person
02R72X204

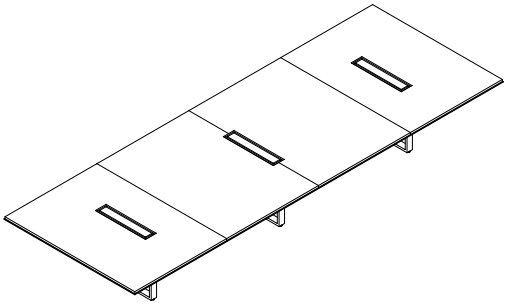

Starting Price: $25,978

72x204 table, veneer Tier 1 top with metal edge, open base, powder coat metal finish

Pattern Number: 02R72X204

Step 1. Top Material	
V	Veneer
G	Glass
C	Corian
Q	Caesarstone

Step 2. Edge Selection/Finish		
AU_ _	Spinneybeck Leather: Acqua	+3,956
MC _ _	Powder Coat	+0
PM01	Polished Chrome	+1,920
PM02	Satin Nickel	+486
PM03	Oil Rubbed Bronze	+1,152

Step 3. Base Type		
BL	Base Loop	+0

Step 4. Top Finish		
T1 _ _	Veneer Tier 1	+0
T2 _ _	Veneer Tier 2	+2,346
GC _ _	Clear Glass, back painted	+10,098
GE _ _	Etched matte Glass, back painted	+12,138
CS01	Corian Glacier White	+14,790
QS _ _	Caesarstone	+38,250

Step 5. Base Finish		
MC _ _	Powder Coat	+0
PM01	Polished Chrome	+1,920
PM02	Satin Nickel	+486
PM03	Oil Rubbed Bronze	+1,152

Step 6. Microphone and/or Grommet Accommodations: Optional		
MA _ _	Microphone hole (factory cut)	Qty _ _ x 321 each
GM _ _	2” Grommet Hole (factory cut), liner, lid, in matching metal finish	Qty _ _ x 423 each

Step 7. Power & Connectivity Access: Optional		
TMHW	Tabletop, Metal lid, Hardwired, Qty 3	+14,271
TMPI	Tabletop, Metal lid, Plug In, Qty 3	+12,603
UMHW	Undermount, Hardwired, Qty 8	+8,152
UMPI	Undermount, Plug In, Qty 8	+5,928

Wire Management Column (sold separately)

Required with any technology selection	
Pattern Number: 02WMC6X6	227
Pattern Number: 02WMC10X10	885

Step 1. Metal Finish for Wire Management Column		6x6	10x10
MC _ _	Powder Coat	+0	+0
PM01	Polished Chrome	+1,065	+485
PM02	Satin Nickel	+1,065	+485
PM03	Oil Rubbed Bronze	+1,595	+2,220

Please consult **page 7** for the palette of DatesWeiser finishes. Natural stone, non-standard glass and veneer, and other technology options are available. Please email **customerservice@datesweiser.com** for a custom quote. Consult technical information on **page 274** for construction details and technical information.

Highline Rectangular Conference Table

72”x216”/ 18 Person
02R72X216

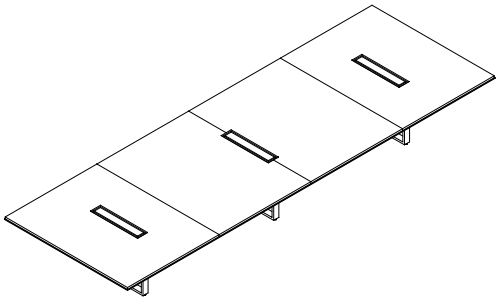

Starting Price: $27,041

72x216 table, veneer Tier 1 top with metal edge, open base, powder coat metal finish

Pattern Number: 02R72X216

Step 1. Top Material	
V	Veneer
G	Glass
C	Corian
Q	Caesarstone

Step 2. Edge Selection/Finish		
AU_ _	Spinneybeck Leather: Acqua	+4,128
MC _ _	Powder Coat	+0
PM01	Polished Chrome	+1,920
PM02	Satin Nickel	+486
PM03	Oil Rubbed Bronze	+1,152

Step 3. Base Type		
BL	Base Loop	+0

Step 4. Top Finish		
T1 _ _	Veneer Tier 1	+0
T2 _ _	Veneer Tier 2	+2,484
GC _ _	Clear Glass, back painted	+10,692
GE _ _	Etched matte Glass, back painted	+12,942
CS01	Corian Glacier White	+15,660
QS _ _	Caesarstone	+40,500

Step 5. Base Finish		
MC _ _	Powder Coat	+0
PM01	Polished Chrome	+1,920
PM02	Satin Nickel	+486
PM03	Oil Rubbed Bronze	+1,152

Step 6. Microphone and/or Grommet Accommodations: Optional		
MA _ _	Microphone hole (factory cut)	Qty _ _ x 321 each
GM _ _	2” Grommet Hole (factory cut), liner, lid, in matching metal finish	Qty _ _ x 423 each

Step 7. Power & Connectivity Access: Optional		
TMHW	Tabletop, Metal lid, Hardwired, Qty 3	+14,271
TMPI	Tabletop, Metal lid, Plug In, Qty 3	+12,603
UMHW	Undermount, Hardwired, Qty 8	+8,152
UMPI	Undermount, Plug In, Qty 8	+5,928

Wire Management Column (sold separately)

Required with any technology selection	
Pattern Number: 02WMC6X6	227
Pattern Number: 02WMC10X10	885

Step 1. Metal Finish for Wire Management Column		6x6	10x10
MC _ _	Powder Coat	+0	+0
PM01	Polished Chrome	+1,065	+485
PM02	Satin Nickel	+1,065	+485
PM03	Oil Rubbed Bronze	+1,595	+2,220

Please consult **page 7** for the palette of DatesWeiser finishes. Natural stone, non-standard glass and veneer, and other technology options are available. Please email **customerservice@datesweiser.com** for a custom quote. Consult technical information on **page 274** for construction details and technical information.

Highline Rectangular Conference Table

72”x228”/ 18 Person
02R72X228

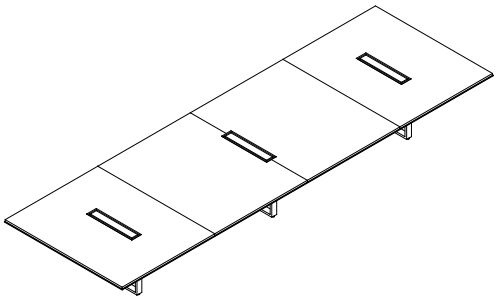

Starting Price: $28,082

72x228 table, veneer Tier 1 top with metal edge, open base, powder coat metal finish

Pattern Number: 02R72X228

Step 1. Top Material	
V	Veneer
G	Glass
C	Corian
Q	Caesarstone

Step 2. Edge Selection/Finish		
AU_ _	Spinneybeck Leather: Acqua	+4,300
MC _ _	Powder Coat	+0
PM01	Polished Chrome	+1,920
PM02	Satin Nickel	+486
PM03	Oil Rubbed Bronze	+1,152

Step 3. Base Type		
BL	Base Loop	+0

Step 4. Top Finish		
T1 _ _	Veneer Tier 1	+0
T2 _ _	Veneer Tier 2	+2,622
GC _ _	Clear Glass, back painted	+11,286
GE _ _	Etched matte Glass, back painted	+13,566
CS01	Corian Glacier White	+16,530
QS _ _	Caesarstone*	+42,750

Step 5. Base Finish		
MC _ _	Powder Coat	+0
PM01	Polished Chrome	+1,920
PM02	Satin Nickel	+486
PM03	Oil Rubbed Bronze	+1,152

Step 6. Microphone and/or Grommet Accommodations: Optional		
MA _ _	Microphone hole (factory cut)	Qty _ _ x 321 each
GM _ _	2” Grommet Hole (factory cut), liner, lid, in matching metal finish	Qty _ _ x 423 each

Step 7. Power & Connectivity Access: Optional		
TMHW	Tabletop, Metal lid, Hardwired, Qty 3	+14,271
TMPI	Tabletop, Metal lid, Plug In, Qty 3	+12,603
UMHW	Undermount, Hardwired, Qty 8	+8,152
UMPI	Undermount, Plug In, Qty 8	+5,928

Wire Management Column (sold separately)

Required with any technology selection	
Pattern Number: 02WMC6X6	227
Pattern Number: 02WMC10X10	885

Step 1. Metal Finish for Wire Management Column		6x6	10x10
MC _ _	Powder Coat	+0	+0
PM01	Polished Chrome	+1,065	+485
PM02	Satin Nickel	+1,065	+485
PM03	Oil Rubbed Bronze	+1,595	+2,220

Please consult **page 7** for the palette of DatesWeiser finishes. Natural stone, non-standard glass and veneer, and other technology options are available. Please email **customerservice@datesweiser.com** for a custom quote. Consult technical information on **page 274** for construction details and technical information.

*Tables with a Caesarstone finish require a 5-section top.

Highline Rectangular Conference Table

72”x240”/ 20 Person
02R72X240

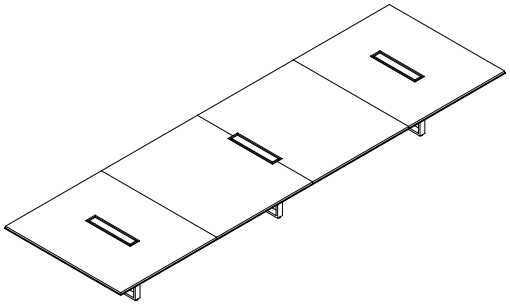

Starting Price: $29,125

72x240 table, veneer Tier 1 top with metal edge, open base, powder coat metal finish

Pattern Number: 02R72X240

Step 1. Top Material	
V	Veneer
G	Glass
C	Corian
Q	Caesarstone

Step 2. Edge Selection/Finish		
AU_ _	Spinneybeck Leather: Acqua	+4,472
MC _ _	Powder Coat	+0
PM01	Polished Chrome	+1,920
PM02	Satin Nickel	+486
PM03	Oil Rubbed Bronze	+1,152

Step 3. Base Type		
BL	Base Loop	+0

Step 4. Top Finish		
T1 _ _	Veneer Tier 1	+0
T2 _ _	Veneer Tier 2	+2,760
GC _ _	Clear Glass, back painted	+11,880
GE _ _	Etched matte Glass, back painted	+14,280
CS01	Corian Glacier White	+17,500
QS _ _	Caesarstone*	+45,000

Step 5. Base Finish		
MC _ _	Powder Coat	+0
PM01	Polished Chrome	+1,920
PM02	Satin Nickel	+486
PM03	Oil Rubbed Bronze	+1,152

Step 6. Microphone and/or Grommet Accommodations: Optional		
MA _ _	Microphone hole (factory cut)	Qty _ _ x 321 each
GM _ _	2” Grommet Hole (factory cut), liner, lid, in matching metal finish	Qty _ _ x 423 each

Step 7. Power & Connectivity Access: Optional		
TMHW	Tabletop, Metal lid, Hardwired, Qty 3	+14,271
TMPI	Tabletop, Metal lid, Plug In, Qty 3	+12,603
UMHW	Undermount, Hardwired, Qty 10	+10,190
UMPI	Undermount, Plug In, Qty 10	+7,410

Wire Management Column (sold separately)

Required with any technology selection	
Pattern Number: 02WMC6X6	227
Pattern Number: 02WMC10X10	885

Step 1. Metal Finish for Wire Management Column		6x6	10x10
MC _ _	Powder Coat	+0	+0
PM01	Polished Chrome	+1,065	+485
PM02	Satin Nickel	+1,065	+485
PM03	Oil Rubbed Bronze	+1,595	+2,220

Please consult **page 7** for the palette of DatesWeiser finishes. Natural stone, non-standard glass and veneer, and other technology options are available. Please email **customerservice@datesweiser.com** for a custom quote. Consult technical information on **page 274** for construction details and technical information.

*Tables with a Caesarstone finish require a 5-section top.

Highline Elliptical Conference Tables Index

48″–72″ width

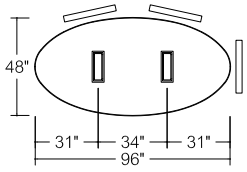

02E48X96
6 Person Table

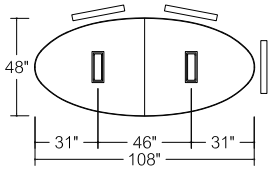

02E48X108
6 Person Table

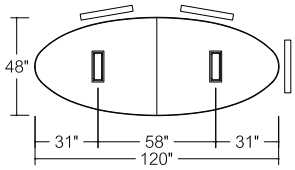

02E48X120
6 Person Table

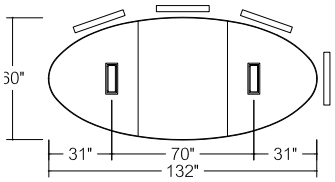

02E60X132
8 Person Table

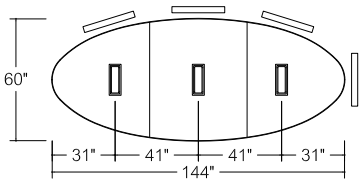

02E60X144
8 Person Table

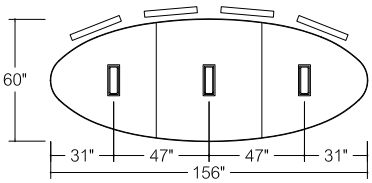

02E60X156
8 Person Table

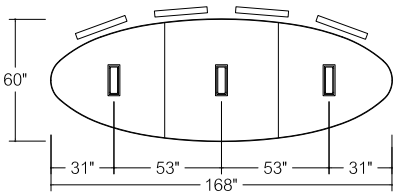

02E60X168
8 Person Table

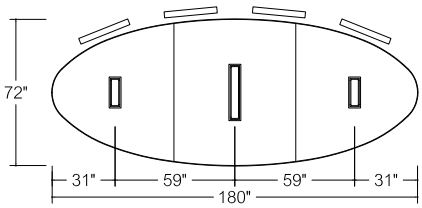

02E72X180
8 Person Table

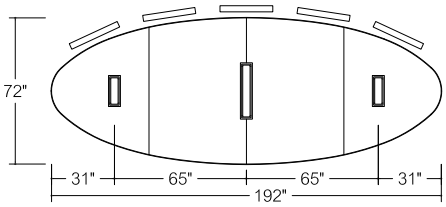

02E72X192
10 Person Table

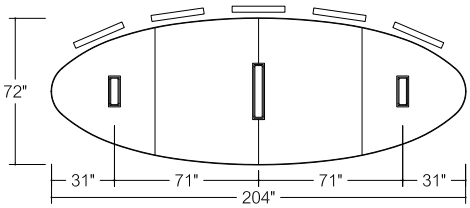

02E72X204
10 Person Table

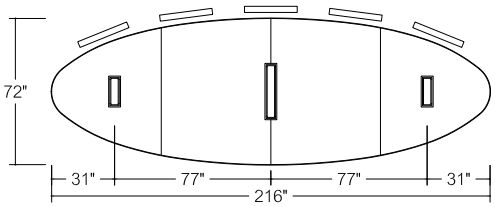

02E72X216
10 Person Table

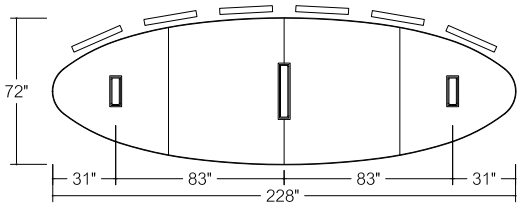

02E72X228
12 Person Table

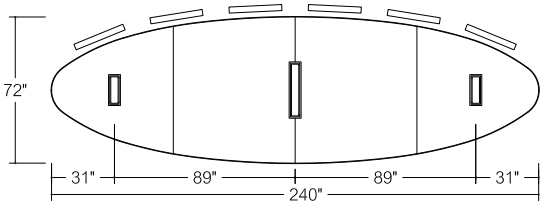

02E72X240
12 Person Table

Highline Elliptical Conference Table

48”x96”/ 6 Person
02E48X96

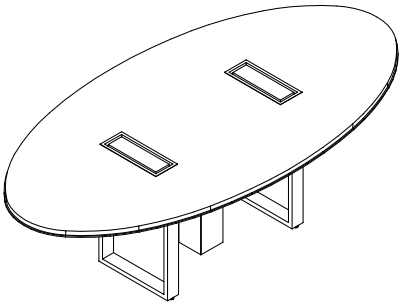

Starting Price: $14,589

48x96 table, veneer Tier 1 top with metal edge, open base, powder coat metal finish

Pattern Number: 02E48X96

Step 1. Top Material	
V	Veneer
G	Glass
C	Corian
Q	Caesarstone

Step 2. Edge Selection/Finish		
AU_ _	Spinneybeck Leather: Acqua	+2,106
MC _ _	Powder Coat	+0
PM01	Polished Chrome	+1,487
PM02	Satin Nickel	+1,809
PM03	Oil Rubbed Bronze	+3,945

Step 3. Base Type		
BL	Base Loop	+0

Step 4. Top Finish		
T1 _ _	Veneer Tier 1	+0
T2 _ _	Veneer Tier 2	+736
GC _ _	Clear Glass, back painted	+4,800
GE _ _	Etched matte Glass, back painted	+5,760
CS01	Corian Glacier White	+7,680
QS _ _	Caesarstone	+15,200

Step 5. Base Finish		
MC _ _	Powder Coat	+0
PM01	Polished Chrome	+1,487
PM02	Satin Nickel	+1,809
PM03	Oil Rubbed Bronze	+3,945

Step 6. Microphone and/or Grommet Accommodations: Optional		
MA _ _	Microphone hole (factory cut)	Qty _ _ x 321 each
GM _ _	2” Grommet Hole (factory cut), liner, lid, in matching metal finish	Qty _ _ x 423 each

Step 7. Power & Connectivity Access: Optional		
TMHW	Tabletop, Metal lid, Hardwired, Qty 2	+7,492
TMPI	Tabletop, Metal lid, Plug In, Qty 2	+6,382
UMHW	Undermount, Hardwired, Qty 4	+4,076
UMPI	Undermount, Plug In, Qty 4	+2,964

Wire Management Column (sold separately)

Required with any technology selection	
Pattern Number: 02WMC6X6	227
Pattern Number: 02WMC10X10	885

Step 1. Metal Finish for Wire Management Column		6x6	10x10
MC _ _	Powder Coat	+0	+0
PM01	Polished Chrome	+1,065	+485
PM02	Satin Nickel	+1,065	+485
PM03	Oil Rubbed Bronze	+1,595	+2,220

Please consult **page 7** for the palette of DatesWeiser finishes. Natural stone, non-standard glass and veneer, and other technology options are available. Please email **customerservice@datesweiser.com** for a custom quote. Consult technical information on **page 274** for construction details and technical information.

Highline Elliptical Conference Table

48”x108”/ 6 Person
02E48X108

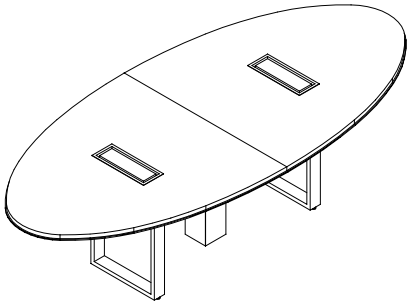

Starting Price: $15,061

48x108 table, veneer Tier 1 top with metal edge, open base, powder coat metal finish

Pattern Number: 02E48X108

Step 1. Top Material	
V	Veneer
G	Glass
C	Corian
Q	Caesarstone

Step 2. Edge Selection Finish		
AU_ _	Spinneybeck Leather: Acqua	+2,301
MC _ _	Powder Coat	+0
PM01	Polished Chrome	+1,487
PM02	Satin Nickel	+1,809
PM03	Oil Rubbed Bronze	+4,433

Step 3. Base Type		
BL	Base Loop	+0

Step 4. Top Finish		
T1 _ _	Veneer Tier 1	+0
T2 _ _	Veneer Tier 2	+828
GC _ _	Clear Glass, back painted	+5,400
GE _ _	Etched matte Glass, back painted	+6,480
CS01	Corian Glacier White	+8,640
QS _ _	Caesarstone	+17,100

Step 5. Base Finish		
MC _ _	Powder Coat	+0
PM01	Polished Chrome	+1,487
PM02	Satin Nickel	+1,809
PM03	Oil Rubbed Bronze	+4,433

Step 6. Microphone and/or Grommet Accommodations: Optional		
MA _ _	Microphone hole (factory cut)	Qty _ _ x 321 each
GM _ _	2” Grommet Hole (factory cut), liner, lid, in matching metal finish	Qty _ _ x 423 each

Step 7. Power & Connectivity Access: Optional		
TMHW	Tabletop, Metal lid, Hardwired, Qty 2	+7,492
TMPI	Tabletop, Metal lid, Plug In, Qty 2	+6,382
UMHW	Undermount, Hardwired, Qty 4	+4,076
UMPI	Undermount, Plug In, Qty 4	+2,964

Wire Management Column (sold separately)

Required with any technology selection	
Pattern Number: 02WMC6X6	227
Pattern Number: 02WMC10X10	885

Step 1. Metal Finish for Wire Management Column		6x6	10x10
MC _ _	Powder Coat	+0	+0
PM01	Polished Chrome	+1,065	+485
PM02	Satin Nickel	+1,065	+485
PM03	Oil Rubbed Bronze	+1,595	+2,220

Please consult **page 7** for the palette of DatesWeiser finishes. Natural stone, non-standard glass and veneer, and other technology options are available. Please email **customerservice@datesweiser.com** for a custom quote. Consult technical information on **page 274** for construction details and technical information.

Highline Elliptical Conference Table

48”x120”/ 6 Person
02E48X120

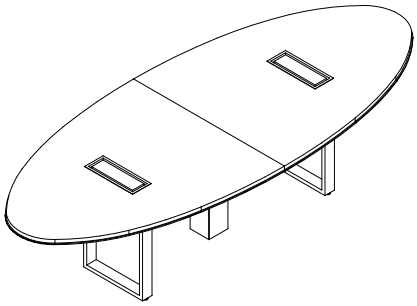

Starting Price: $16,053

48x120 table, veneer Tier 1 top with metal edge, open base, powder coat metal finish

Pattern Number: 02E48X120

Step 1. Top Material	
V	Veneer
G	Glass
C	Corian
Q	Caesarstone

Step 2. Edge Selection/Finish		
AU_ _	Spinneybeck Leather: Acqua	+2,499
MC _ _	Powder Coat	+0
PM01	Polished Chrome	+1,506
PM02	Satin Nickel	+1,828
PM03	Oil Rubbed Bronze	+4,393

Step 3. Base Type		
BL	Base Loop	+0

Step 4. Top Finish		
T1 _ _	Veneer Tier 1	+0
T2 _ _	Veneer Tier 2	+920
GC _ _	Clear Glass, back painted	+6,000
GE _ _	Etched matte Glass, back painted	+7,200
CS01	Corian Glacier White	+9,600
QS _ _	Caesarstone	+19,000

Step 5. Base Finish		
MC _ _	Powder Coat	+0
PM01	Polished Chrome	+1,506
PM02	Satin Nickel	+1,828
PM03	Oil Rubbed Bronze	+4,393

Step 6. Microphone and/or Grommet Accommodations: Optional		
MA _ _	Microphone hole (factory cut)	Qty _ _ x 321 each
GM _ _	2” Grommet Hole (factory cut), liner, lid, in matching metal finish	Qty _ _ x 423 each

Step 7. Power & Connectivity Access: Optional		
TMHW	Tabletop, Metal lid, Hardwired, Qty 2	+7,492
TMPI	Tabletop, Metal lid, Plug In, Qty 2	+6,382
UMHW	Undermount, Hardwired, Qty 4	+4,076
UMPI	Undermount, Plug In, Qty 4	+2,964

Wire Management Column (sold separately)

Required with any technology selection	
Pattern Number: 02WMC6X6	227
Pattern Number: 02WMC10X10	885

Step 1. Metal Finish for Wire Management Column		6x6	10x10
MC _ _	Powder Coat	+0	+0
PM01	Polished Chrome	+1,065	+485
PM02	Satin Nickel	+1,065	+485
PM03	Oil Rubbed Bronze	+1,595	+2,220

Please consult **page 7** for the palette of DatesWeiser finishes. Natural stone, non-standard glass and veneer, and other technology options are available. Please email **customerservice@datesweiser.com** for a custom quote. Consult technical information on **page 274** for construction details and technical information.

Highline Elliptical Conference Table

60”x132”/ 8 Person
02E60X132

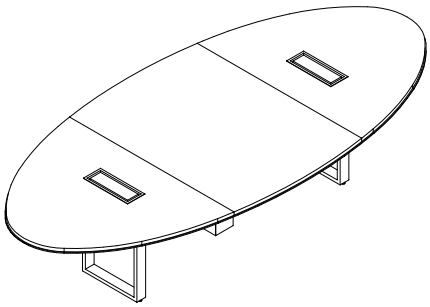

Starting Price: $19,193

60x132 table, veneer Tier 1 top with metal edge, open base, powder coat metal finish

Pattern Number: 02E60X132

Step 1. Top Material	
V	Veneer
G	Glass
C	Corian
Q	Caesarstone

Step 2. Edge Selection/Finish		
AU_ _	Spinneybeck Leather: Acqua	+2,824
MC _ _	Powder Coat	+0
PM01	Polished Chrome	+1,784
PM02	Satin Nickel	+2,267
PM03	Oil Rubbed Bronze	+5,507

Step 3. Base Type		
BL	Base Loop	+0

Step 4. Top Finish		
T1 _ _	Veneer Tier 1	+0
T2 _ _	Veneer Tier 2	+1,265
GC _ _	Clear Glass, back painted	+8,250
GE _ _	Etched matte Glass, back painted	+9,900
CS01	Corian Glacier White	+13,200
QS _ _	Caesarstone	+26,125

Step 5. Base Finish		
MC _ _	Powder Coat	+0
PM01	Polished Chrome	+1,784
PM02	Satin Nickel	+2,267
PM03	Oil Rubbed Bronze	+5,507

Step 6. Microphone and/or Grommet Accommodations: Optional		
MA _ _	Microphone hole (factory cut)	Qty _ _ x 321 each
GM _ _	2” Grommet Hole (factory cut), liner, lid, in matching metal finish	Qty _ _ x 423 each

Step 7. Power & Connectivity Access: Optional		
TMHW	Tabletop, Metal lid, Hardwired, Qty 2	+7,492
TMPI	Tabletop, Metal lid, Plug In, Qty 2	+6,382
UMHW	Undermount, Hardwired, Qty 4	+4,076
UMPI	Undermount, Plug In, Qty 4	+2,964

Wire Management Column (sold separately)

Required with any technology selection	
Pattern Number: 02WMC6X6	227
Pattern Number: 02WMC10X10	885

Step 1. Metal Finish for Wire Management Column		6x6	10x10
MC _ _	Powder Coat	+0	+0
PM01	Polished Chrome	+1,065	+485
PM02	Satin Nickel	+1,065	+485
PM03	Oil Rubbed Bronze	+1,595	+2,220

Please consult **page 7** for the palette of DatesWeiser finishes. Natural stone, non-standard glass and veneer, and other technology options are available. Please email **customerservice@datesweiser.com** for a custom quote. Consult technical information on **page 274** for construction details and technical information.

Highline Elliptical Conference Table

60”x144”/ 8 Person
02E60X144

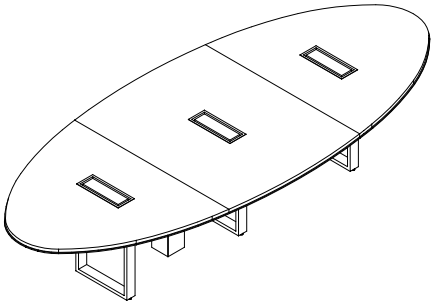

Starting Price:	$21,053

60x144 table, veneer Tier 1 top with metal edge, open base, powder coat metal finish

Pattern Number: 02E60X144

Step 1. Top Material	
V	Veneer
G	Glass
C	Corian
Q	Caesarstone

Step 2. Edge Selection/Finish		
AU_ _	Spinneybeck Leather: Acqua	+3,021
MC _ _	Powder Coat	+0
PM01	Polished Chrome	+1,784
PM02	Satin Nickel	+2,267
PM03	Oil Rubbed Bronze	+5,507

Step 3. Base Type		
BL	Base Loop	+0

Step 4. Top Finish		
T1 _ _	Veneer Tier 1	+0
T2 _ _	Veneer Tier 2	+1,380
GC _ _	Clear Glass, back painted	+9,000
GE _ _	Etched matte Glass, back painted	+10,800
CS01	Corian Glacier White	+14,400
QS _ _	Caesarstone	+28,500

Step 5. Base Finish		
MC _ _	Powder Coat	+0
PM01	Polished Chrome	+1,784
PM02	Satin Nickel	+2,267
PM03	Oil Rubbed Bronze	+5,507

Step 6. Microphone and/or Grommet Accommodations: Optional		
MA _ _	Microphone hole (factory cut)	Qty _ _ x 321 each
GM _ _	2” Grommet Hole (factory cut), liner, lid, in matching metal finish	Qty _ _ x 423 each

Step 7. Power & Connectivity Access: Optional		
TMHW	Tabletop, Metal lid, Hardwired, Qty 3	+11,238
TMPI	Tabletop, Metal lid, Plug In, Qty 3	+9,573
UMHW	Undermount, Hardwired, Qty 4	+4,076
UMPI	Undermount, Plug In, Qty 4	+2,964

Wire Management Column (sold separately)

Required with any technology selection	
Pattern Number: 02WMC6X6	227
Pattern Number: 02WMC10X10	885

Step 1. Metal Finish for Wire Management Column		6x6	10x10
MC _ _	Powder Coat	+0	+0
PM01	Polished Chrome	+1,065	+485
PM02	Satin Nickel	+1,065	+485
PM03	Oil Rubbed Bronze	+1,595	+2,220

Please consult **page 7** for the palette of DatesWeiser finishes. Natural stone, non-standard glass and veneer, and other technology options are available. Please email **customerservice@datesweiser.com** for a custom quote. Consult technical information on **page 274** for construction details and technical information.

Highline Elliptical Conference Table

60”x156”/ 8 Person
02E60X156

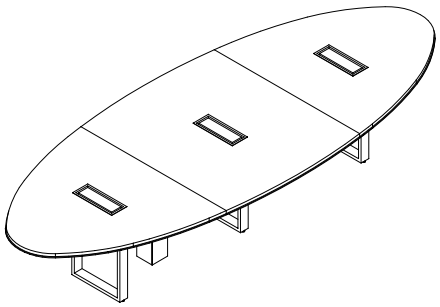

Starting Price: $21,801

60x156 table, veneer Tier 1 top with metal edge, open base, powder coat metal finish

Pattern Number: 02E60X156

Step 1. Top Material	
V	Veneer
G	Glass
C	Corian
Q	Caesarstone

Step 2. Edge Selection/Finish		
AU_ _	Spinneybeck Leather: Acqua	+3,220
MC _ _	Powder Coat	+0
PM01	Polished Chrome	+1,785
PM02	Satin Nickel	+2,268
PM03	Oil Rubbed Bronze	+5,508

Step 3. Base Type		
BL	Base Loop	+0

Step 4. Top Finish		
T1 _ _	Veneer Tier 1	+0
T2 _ _	Veneer Tier 2	+1,495
GC _ _	Clear Glass, back painted	+9,750
GE _ _	Etched matte Glass, back painted	+11,700
CS01	Corian Glacier White	+15,600
QS _ _	Caesarstone	+30,875

Step 5. Base Finish		
MC _ _	Powder Coat	+0
PM01	Polished Chrome	+1,785
PM02	Satin Nickel	+2,268
PM03	Oil Rubbed Bronze	+5,508

Step 6. Microphone and/or Grommet Accommodations: Optional		
MA _ _	Microphone hole (factory cut)	Qty _ _ x 321 each
GM _ _	2” Grommet Hole (factory cut), liner, lid, in matching metal finish	Qty _ _ x 423 each

Step 7. Power & Connectivity Access: Optional		
TMHW	Tabletop, Metal lid, Hardwired, Qty 3	+11,238
TMPI	Tabletop, Metal lid, Plug In, Qty 3	+9,573
UMHW	Undermount, Hardwired, Qty 4	+4,076
UMPI	Undermount, Plug In, Qty 4	+2,964

Wire Management Column (sold separately)

Required with any technology selection	
Pattern Number: 02WMC6X6	227
Pattern Number: 02WMC10X10	885

Step 1. Metal Finish for Wire Management Column		6x6	10x10
MC _ _	Powder Coat	+0	+0
PM01	Polished Chrome	+1,065	+485
PM02	Satin Nickel	+1,065	+485
PM03	Oil Rubbed Bronze	+1,595	+2,220

Please consult **page 7** for the palette of DatesWeiser finishes. Natural stone, non-standard glass and veneer, and other technology options are available. Please email **customerservice@datesweiser.com** for a custom quote. Consult technical information on **page 274** for construction details and technical information.

Highline Elliptical Conference Table

60”x168”/ 8 Person
02E60X168

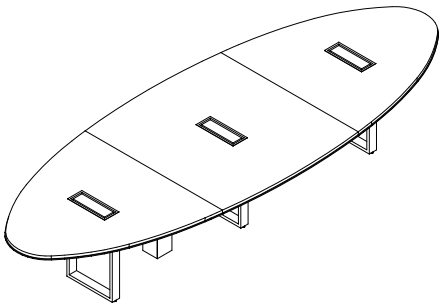

Starting Price: $23,324

60x168 table, veneer Tier 1 top with metal edge, open base, powder coat metal finish

Pattern Number: 02E60X168

Step 1. Top Material	
V	Veneer
G	Glass
C	Corian
Q	Caesarstone

Step 2. Edge Selection/Finish		
AU_ _	Spinneybeck Leather: Acqua	+3,420
MC _ _	Powder Coat	+0
PM01	Polished Chrome	+1,814
PM02	Satin Nickel	+2,297
PM03	Oil Rubbed Bronze	+5,508

Step 3. Base Type		
BL	Base Loop	+0

Step 4. Top Finish		
T1 _ _	Veneer Tier 1	+0
T2 _ _	Veneer Tier 2	+1,610
GC _ _	Clear Glass, back painted	+10,500
GE _ _	Etched matte Glass, back painted	+12,600
CS01	Corian Glacier White	+16,800
QS _ _	Caesarstone	+33,250

Step 5. Base Finish		
MC _ _	Powder Coat	+0
PM01	Polished Chrome	+1,814
PM02	Satin Nickel	+2,297
PM03	Oil Rubbed Bronze	+5,508

Step 6. Microphone and/or Grommet Accommodations: Optional		
MA _ _	Microphone hole (factory cut)	Qty _ _ x 321 each
GM _ _	2” Grommet Hole (factory cut), liner, lid, in matching metal finish	Qty _ _ x 423 each

Step 7. Power & Connectivity Access: Optional		
TMHW	Tabletop, Metal lid, Hardwired, Qty 3	+11,238
TMPI	Tabletop, Metal lid, Plug In, Qty 3	+9,573
UMHW	Undermount, Hardwired, Qty 4	+4,076
UMPI	Undermount, Plug In, Qty 4	+2,964

Wire Management Column (sold separately)

Required with any technology selection	
Pattern Number: 02WMC6X6	227
Pattern Number: 02WMC10X10	885

Step 1. Metal Finish for Wire Management Column		6x6	10x10
MC _ _	Powder Coat	+0	+0
PM01	Polished Chrome	+1,065	+485
PM02	Satin Nickel	+1,065	+485
PM03	Oil Rubbed Bronze	+1,595	+2,220

Please consult **page 7** for the palette of DatesWeiser finishes. Natural stone, non-standard glass and veneer, and other technology options are available. Please email **customerservice@datesweiser.com** for a custom quote. Consult technical information on **page 274** for construction details and technical information.

Highline Elliptical Conference Table

72”x180”/ 10 Person
02E72X180

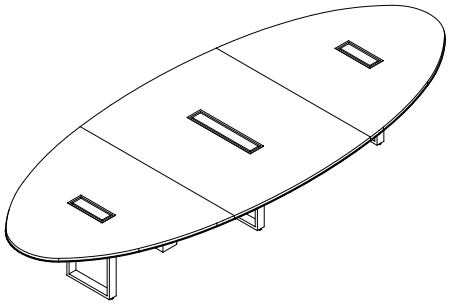

Starting Price: $27,533

72x192 table, veneer Tier 1 top with metal edge, open base, powder coat metal finish

Pattern Number: 02E72X180

Step 1. Top Material	
V	Veneer
G	Glass
C	Corian
Q	Caesarstone

Step 2. Edge Selection/Finish		
AU_ _	Spinneybeck Leather: Acqua	+3,741
MC _ _	Powder Coat	+0
PM01	Polished Chrome	+1,864
PM02	Satin Nickel	+2,339
PM03	Oil Rubbed Bronze	+5,774

Step 3. Base Type		
BL	Base Loop	+0

Step 4. Top Finish		
T1 _ _	Veneer Tier 1	+0
T2 _ _	Veneer Tier 2	+2,070
GC _ _	Clear Glass, back painted	+13,500
GE _ _	Etched matte Glass, back painted	+16,200
CS01	Corian Glacier White	+21,600
QS _ _	Caesarstone*	+42,750

Step 5. Base Finish		
MC _ _	Powder Coat	+0
PM01	Polished Chrome	+1,864
PM02	Satin Nickel	+2,339
PM03	Oil Rubbed Bronze	+5,774

Step 6. Microphone and/or Grommet Accommodations: Optional		
MA _ _	Microphone hole (factory cut)	Qty _ _ x 321 each
GM _ _	2” Grommet Hole (factory cut), liner, lid, in matching metal finish	Qty _ _ x 423 each

Step 7. Power & Connectivity Access: Optional		
TMHW	Tabletop, Metal lid, Hardwired, Qty 3	+12,249
TMPI	Tabletop, Metal lid, Plug In, Qty 3	+10,583
UMHW	Undermount, Hardwired, Qty 4	+4,076
UMPI	Undermount, Plug In, Qty 4	+2,964

Wire Management Column (sold separately)

Required with any technology selection	
Pattern Number: 02WMC6X6	227
Pattern Number: 02WMC10X10	885

Step 1. Metal Finish for Wire Management Column		6x6	10x10
MC _ _	Powder Coat	+0	+0
PM01	Polished Chrome	+1,065	+485
PM02	Satin Nickel	+1,065	+485
PM03	Oil Rubbed Bronze	+1,595	+2,220

Please consult **page 7** for the palette of DatesWeiser finishes. Natural stone, non-standard glass and veneer, and other technology options are available. Please email **customerservice@datesweiser.com** for a custom quote. Consult technical information on **page 274** for construction details and technical information.

*Tables with a Caesarstone finish require a 4-section top.

Highline Elliptical Conference Table

72”x192”/ 10 Person
02E72X192

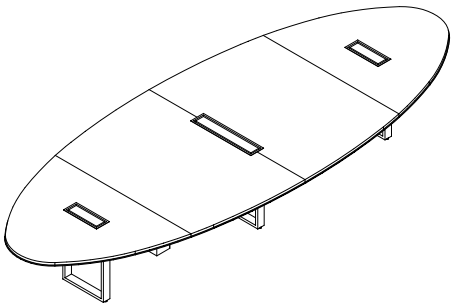

Starting Price:	$29,378

72x192 table, veneer Tier 1 top with metal edge, open base, powder coat metal finish

Pattern Number: 02E72X192

Step 1. Top Material	
V	Veneer
G	Glass
C	Corian
Q	Caesarstone

Step 2. Edge Selection/Finish		
AU_ _	Spinneybeck Leather: Acqua	+3,941
MC _ _	Powder Coat	+0
PM01	Polished Chrome	+2,262
PM02	Satin Nickel	+2,737
PM03	Oil Rubbed Bronze	+7,086

Step 3. Base Type		
BL	Base Loop	+0

Step 4. Top Finish		
T1 _ _	Veneer Tier 1	+0
T2 _ _	Veneer Tier 2	+2,208
GC _ _	Clear Glass, back painted	+14,400
GE _ _	Etched matte Glass, back painted	+17,280
CS01	Corian Glacier White	+23,040
QS _ _	Caesarstone	+45,600

Step 5. Base Finish		
MC _ _	Powder Coat	+0
PM01	Polished Chrome	+2,262
PM02	Satin Nickel	+2,737
PM03	Oil Rubbed Bronze	+7,086

Step 6. Microphone and/or Grommet Accommodations: Optional		
MA _ _	Microphone hole (factory cut)	Qty _ _ x 321 each
GM _ _	2” Grommet Hole (factory cut), liner, lid, in matching metal finish	Qty _ _ x 423 each

Step 7. Power & Connectivity Access: Optional		
TMHW	Tabletop, Metal lid, Hardwired, Qty 3	+12,249
TMPI	Tabletop, Metal lid, Plug In, Qty 3	+10,583
UMHW	Undermount, Hardwired, Qty 4	+4,076
UMPI	Undermount, Plug In, Qty 4	+2,964

Wire Management Column (sold separately)

Required with any technology selection	
Pattern Number: 02WMC6X6	227
Pattern Number: 02WMC10X10	885

Step 1. Metal Finish for Wire Management Column		6x6	10x10
MC _ _	Powder Coat	+0	+0
PM01	Polished Chrome	+1,065	+485
PM02	Satin Nickel	+1,065	+485
PM03	Oil Rubbed Bronze	+1,595	+2,220

Please consult **page 7** for the palette of DatesWeiser finishes. Natural stone, non-standard glass and veneer, and other technology options are available. Please email **customerservice@datesweiser.com** for a custom quote. Consult technical information on **page 274** for construction details and technical information.

Highline Elliptical Conference Table

72”x204”/ 10 Person
02E72X204

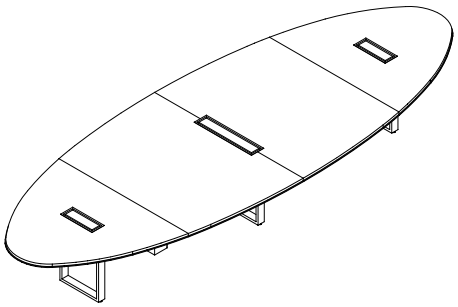

Starting Price: $30,358

72x204 table, veneer Tier 1 top with metal edge, open base, powder coat metal finish

Pattern Number: 02E72X204

Step 1. Top Material	
V	Veneer
G	Glass
C	Corian
Q	Caesarstone

Step 2. Edge Selection/Finish		
AU_ _	Spinneybeck Leather: Acqua	+4,142
MC _ _	Powder Coat	+0
PM01	Polished Chrome	+2,262
PM02	Satin Nickel	+2,737
PM03	Oil Rubbed Bronze	+7,125

Step 3. Base Type		
BL	Base Loop	+0

Step 4. Top Finish		
T1 _ _	Veneer Tier 1	+0
T2 _ _	Veneer Tier 2	+2,346
GC _ _	Clear Glass, back painted	+15,300
GE _ _	Etched matte Glass, back painted	+18,360
CS01	Corian Glacier White	+24,480
QS _ _	Caesarstone	+48,450

Step 5. Base Finish		
MC _ _	Powder Coat	+0
PM01	Polished Chrome	+2,262
PM02	Satin Nickel	+2,737
PM03	Oil Rubbed Bronze	+7,125

Step 6. Microphone and/or Grommet Accommodations: Optional		
MA _ _	Microphone hole (factory cut)	Qty _ _ x 321 each
GM _ _	2” Grommet Hole (factory cut), liner, lid, in matching metal finish	Qty _ _ x 423 each

Step 7. Power & Connectivity Access: Optional		
TMHW	Tabletop, Metal lid, Hardwired, Qty 3	+12,249
TMPI	Tabletop, Metal lid, Plug In, Qty 3	+10,583
UMHW	Undermount, Hardwired, Qty 4	+4,076
UMPI	Undermount, Plug In, Qty 4	+2,964

Wire Management Column (sold separately)

Required with any technology selection	
Pattern Number: 02WMC6X6	227
Pattern Number: 02WMC10X10	885

Step 1. Metal Finish for Wire Management Column		6x6	10x10
MC _ _	Powder Coat	+0	+0
PM01	Polished Chrome	+1,065	+485
PM02	Satin Nickel	+1,065	+485
PM03	Oil Rubbed Bronze	+1,595	+2,220

Please consult **page 7** for the palette of DatesWeiser finishes. Natural stone, non-standard glass and veneer, and other technology options are available. Please email **customerservice@datesweiser.com** for a custom quote. Consult technical information on **page 274** for construction details and technical information.

Highline Elliptical Conference Table

72”x216”/ 10 Person
02E72X216

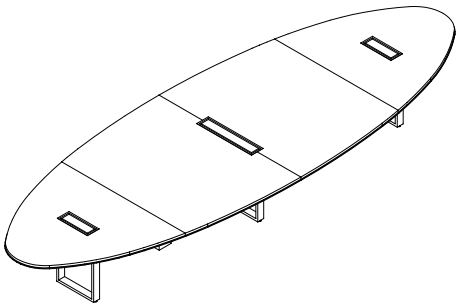

Starting Price:	$31,933

72x216 table, veneer Tier 1 top with metal edge, open base, powder coat metal finish

Pattern Number: 02E72X216

Step 1. Top Material	
V	Veneer
G	Glass
C	Corian
Q	Caesarstone

Step 2. Edge Selection/Finish		
AU_ _	Spinneybeck Leather: Acqua	+4,343
MC _ _	Powder Coat	+0
PM01	Polished Chrome	+2,262
PM02	Satin Nickel	+2,737
PM03	Oil Rubbed Bronze	+7,125

Step 3. Base Type		
BL	Base Loop	+0

Step 4. Top Finish		
T1 _ _	Veneer Tier 1	+0
T2 _ _	Veneer Tier 2	+2,484
GC _ _	Clear Glass, back painted	+16,200
GE _ _	Etched matte Glass, back painted	+19,440
CS01	Corian Glacier White	+25,920
QS _ _	Caesarstone	+51,300

Step 5. Base Finish		
MC _ _	Powder Coat	+0
PM01	Polished Chrome	+2,262
PM02	Satin Nickel	+2,737
PM03	Oil Rubbed Bronze	+7,125

Step 6. Microphone and/or Grommet Accommodations: Optional		
MA _ _	Microphone hole (factory cut)	Qty _ _ x 321 each
GM _ _	2” Grommet Hole (factory cut), liner, lid, in matching metal finish	Qty _ _ x 423 each

Step 7. Power & Connectivity Access: Optional		
TMHW	Tabletop, Metal lid, Hardwired, Qty 3	+12,249
TMPI	Tabletop, Metal lid, Plug In, Qty 3	+10,583
UMHW	Undermount, Hardwired, Qty 4	+4,076
UMPI	Undermount, Plug In, Qty 4	+2,964

Wire Management Column (sold separately)

Required with any technology selection	
Pattern Number: 02WMC6X6	227
Pattern Number: 02WMC10X10	885

Step 1. Metal Finish for Wire Management Column		6x6	10x10
MC _ _	Powder Coat	+0	+0
PM01	Polished Chrome	+1,065	+458
PM02	Satin Nickel	+1,065	+458
PM03	Oil Rubbed Bronze	+1,595	+2,220

Please consult **page 7** for the palette of DatesWeiser finishes. Natural stone, non-standard glass and veneer, and other technology options are available. Please email **customerservice@datesweiser.com** for a custom quote. Consult technical information on **page 274** for construction details and technical information.

Highline Elliptical Conference Table

72”x228”/ 12 Person
02E72X228

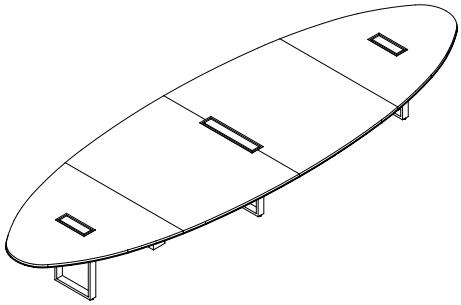

Starting Price:	$32,453

72x228 table, veneer Tier 1 top with metal edge, open base, powder coat metal finish

Pattern Number: 02E72X228

Step 1. Top Material	
V	Veneer
G	Glass
C	Corian
Q	Caesarstone

Step 2. Edge Selection/Finish		
AU_ _	Spinneybeck Leather: Acqua	+4,546
MC _ _	Powder Coat	+0
PM01	Polished Chrome	+2,301
PM02	Satin Nickel	+2,776
PM03	Oil Rubbed Bronze	+7,125

Step 3. Base Type		
BL	Base Loop	+0

Step 4. Top Finish		
T1 _ _	Veneer Tier 1	+0
T2 _ _	Veneer Tier 2	+2,622
GC _ _	Clear Glass, back painted	+17,100
GE _ _	Etched matte Glass, back painted	+20,520
CS01	Corian Glacier White	+27,360
Q _ _	Caesarstone*	+54,150

Step 5. Base Finish		
MC _ _	Powder Coat	+0
PM01	Polished Chrome	+2,301
PM02	Satin Nickel	+2,776
PM03	Oil Rubbed Bronze	+7,125

Step 6. Microphone and/or Grommet Accommodations: Optional		
MA _ _	Microphone hole (factory cut)	Qty _ _ x 321 each
GM _ _	2” Grommet Hole (factory cut), liner, lid, in matching metal finish	Qty _ _ x 423 each

Step 7. Power & Connectivity Access: Optional		
TMHW	Tabletop, Metal lid, Hardwired, Qty 3	+12,249
TMPI	Tabletop, Metal lid, Plug In, Qty 3	+10,583
UMHW	Undermount, Hardwired, Qty 6	+6,114
UMPI	Undermount, Plug In, Qty 6	+4,446

Wire Management Column (sold separately)

Required with any technology selection	
Pattern Number: 02WMC6X6	227
Pattern Number: 02WMC10X10	885

Step 1. Metal Finish for Wire Management Column		6x6	10x10
MC _ _	Powder Coat	+0	+0
PM01	Polished Chrome	+1,065	+458
PM02	Satin Nickel	+1,065	+458
PM03	Oil Rubbed Bronze	+1,595	+2,220

Please consult **page 7** for the palette of DatesWeiser finishes. Natural stone, non-standard glass and veneer, and other technology options are available. Please email **customerservice@datesweiser.com** for a custom quote. Consult technical information on **page 274** for construction details and technical information.

*Tables with a Caesarstone finish require a 5-section top.

Highline Elliptical Conference Table

72”x240”/ 20 Person
02E72X240

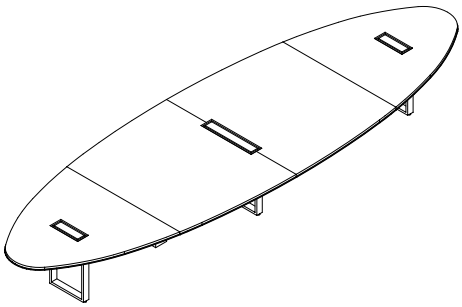

Starting Price: $34,538

72x240 table, veneer Tier 1 top with metal edge, open base, powder coat metal finish

Pattern Number: 02E72X240

Step 1. Top Material	
V	Veneer
G	Glass
C	Corian
Q	Caesarstone

Step 2. Edge Selection/Finish		
AU_ _	Spinneybeck Leather: Acqua	+4,750
MC _ _	Powder Coat	+0
PM01	Polished Chrome	+2,301
PM02	Satin Nickel	+2,776
PM03	Oil Rubbed Bronze	+7,125

Step 3. Base Type		
BL	Base Loop	+0

Step 4. Top Finish		
T1 _ _	Veneer Tier 1	+0
T2 _ _	Veneer Tier 2	+2,760
GC _ _	Clear Glass, back painted	+18,000
GE _ _	Etched matte Glass, back painted	+21,600
CS01	Corian Glacier White	+28,800
QS _ _	Caesarstone*	+57,000

Step 5. Base Finish		
MC _ _	Powder Coat	+0
PM01	Polished Chrome	+2,301
PM02	Satin Nickel	+2,776
PM03	Oil Rubbed Bronze	+7,125

Step 6. Microphone and/or Grommet Accommodations: Optional		
MA _ _	Microphone hole (factory cut)	Qty_ _ x 321 each
GM _ _	2” Grommet Hole (factory cut), liner, lid, in matching metal finish	Qty_ _ x 423 each

Step 7. Power & Connectivity Access: Optional		
TMHW	Tabletop, Metal lid, Hardwired, Qty 3	+12,249
TMPI	Tabletop, Metal lid, Plug In, Qty 3	+10,583
UMHW	Undermount, Hardwired, Qty 6	+6,114
UMPI	Undermount, Plug In, Qty 6	+4,446

Wire Management Column (sold separately)

Required with any technology selection	
Pattern Number: 02WMC6X6	227
Pattern Number: 02WMC10X10	885

Step 1. Metal Finish for Wire Management Column		6x6	10x10
MC _ _	Powder Coat	+0	+0
PM01	Polished Chrome	+1,065	+485
PM02	Satin Nickel	+1,065	+485
PM03	Oil Rubbed Bronze	+1,595	+2,220

Please consult **page 7** for the palette of DatesWeiser finishes. Natural stone, non-standard glass and veneer, and other technology options are available. Please email **customerservice@datesweiser.com** for a custom quote. Consult technical information on **page 274** for construction details and technical information.

*Tables with a Caesarstone finish require a 5-section top.

Highline Boat Shaped Tables Index

48″–72″ width

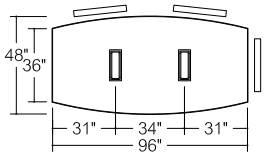

02B48X96
6 Person Table

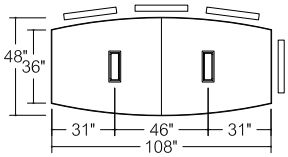

02B48X108
8 Person Table

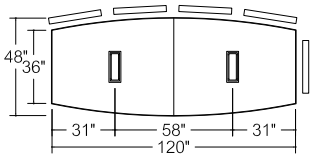

02B48X120
10 Person Table

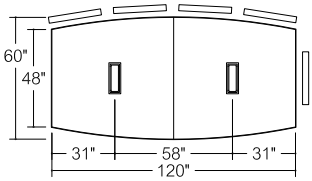

02B60X120
10 Person Table

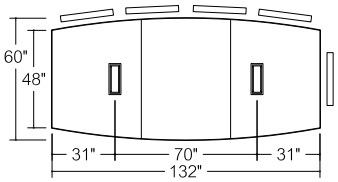

02B60X132
10 Person Table

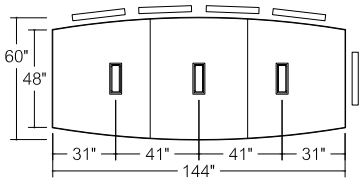

02B60X144
10 Person Table

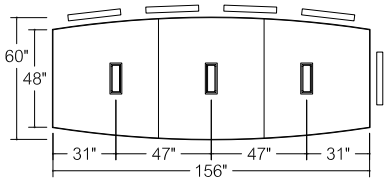

02B60X156
10 Person Table

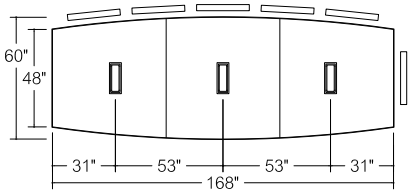

02B60X168
12 Person Table

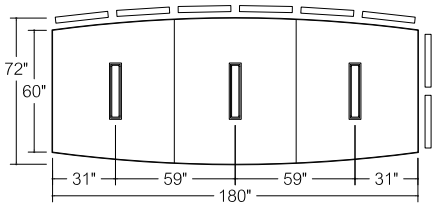

02B72X180
16 Person Table

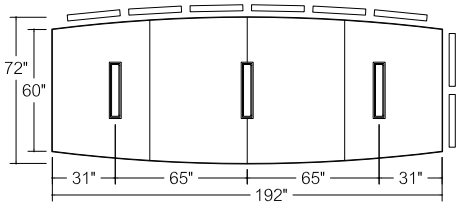

02B72X192
16 Person Table

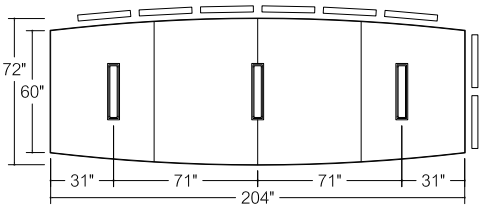

02B72X204
16 Person Table

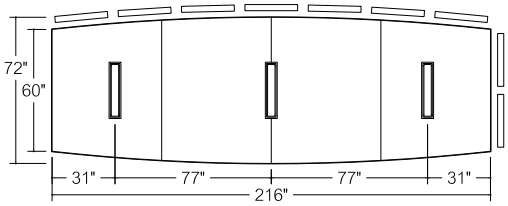

02B72X216
18 Person Table

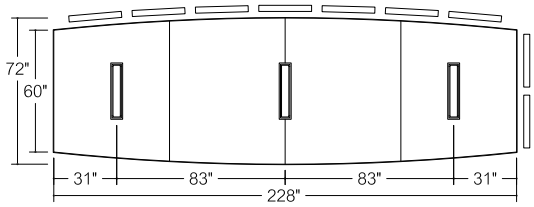

02B72X228
18 Person Table

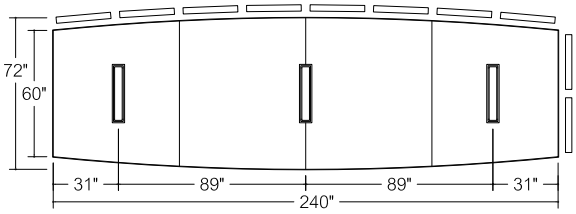

02B72X240
20 Person Table

Highline Boat Conference Table

48”x96”/ 6 Person
02B48X96

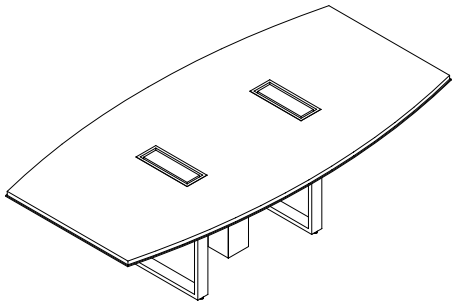

Starting Price: $15,620

48/36x96 table, veneer Tier 1 top with metal edge, open base, powder coat metal finish

Pattern Number: 02B48X96

Step 1. Top Material	
V	Veneer
G	Glass
C	Corian
Q	Caesarstone

Step 2. Edge Selection/Finish		
AU_ _	Spinneybeck Leather: Acqua	+2,412
MC _ _	Powder Coat	+0
PM01	Polished Chrome	+1,803
PM02	Satin Nickel	+2,125
PM03	Oil Rubbed Bronze	+5,192

Step 3. Base Type		
BL	Base Loop	+0

Step 4. Top Finish		
T1 _ _	Veneer Tier 1	+0
T2 _ _	Veneer Tier 2	+736
GC _ _	Clear Glass, back painted	+4,800
GE _ _	Etched matte Glass, back painted	+5,760
CS01	Corian Glacier White	+7,680
QS _ _	Caesarstone	+15,200

Step 5. Base Finish		
MC _ _	Powder Coat	+0
PM01	Polished Chrome	+1,803
PM02	Satin Nickel	+2,125
PM03	Oil Rubbed Bronze	+5,192

Step 6. Microphone and/or Grommet Accommodations: Optional		
MA _ _	Microphone hole (factory cut)	Qty _ _ x 321 each
GM _ _	2” Grommet Hole (factory cut), liner, lid, in matching metal finish	Qty _ _ x 423 each

Step 7. Power & Connectivity Access: Optional		
TMHW	Tabletop, Metal lid, Hardwired, Qty 2	+7,492
TMPI	Tabletop, Metal lid, Plug In, Qty 2	+6,382
UMHW	Undermount, Hardwired, Qty 4	+4,076
UMPI	Undermount, Plug In, Qty 4	+2,964

Wire Management Column (sold separately)

Required with any technology selection	
Pattern Number: 02WMC6X6	227
Pattern Number: 02WMC10X10	885

Step 1. Metal Finish for Wire Management Column		6x6	10x10
MC _ _	Powder Coat	+0	+0
PM01	Polished Chrome	+1,065	+458
PM02	Satin Nickel	+1,065	+458
PM03	Oil Rubbed Bronze	+1,595	+2,220

Please consult **page 7** for the palette of DatesWeiser finishes. Natural stone, non-standard glass and veneer, and other technology options are available. Please email **customerservice@datesweiser.com** for a custom quote. Consult technical information on **page 274** for construction details and technical information.

Highline Boat Conference Table

48”x108”/ 8 Person
02B48X108

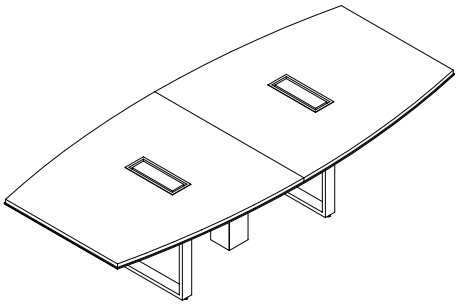

Starting Price: $16,082

48/36x108 table, veneer Tier 1 top with metal edge, open base, powder coat metal finish

Pattern Number: 02B48X108

Step 1. Top Material	
V	Veneer
G	Glass
C	Corian
Q	Caesarstone

Step 2. Edge Selection/Finish		
AU_ _	Spinneybeck Leather: Acqua	+2,628
MC _ _	Powder Coat	+0
PM01	Polished Chrome	+1,803
PM02	Satin Nickel	+2,125
PM03	Oil Rubbed Bronze	+5,192

Step 3. Base Type		
BL	Base Loop	+0

Step 4. Top Finish		
T1 _ _	Veneer Tier 1	+0
T2 _ _	Veneer Tier 2	+828
GC _ _	Clear Glass, back painted	+5,400
GE _ _	Etched matte Glass, back painted	+6,480
CS01	Corian Glacier White	+8,640
QS _ _	Caesarstone	+17,100

Step 5. Base Finish		
MC _ _	Powder Coat	+0
PM01	Polished Chrome	+1,803
PM02	Satin Nickel	+2,125
PM03	Oil Rubbed Bronze	+5,192

Step 6. Microphone and/or Grommet Accommodations: Optional		
MA _ _	Microphone hole (factory cut)	Qty _ _ x 321 each
GM _ _	2” Grommet Hole (factory cut), liner, lid, in matching metal finish	Qty _ _ x 423 each

Step 7. Power & Connectivity Access: Optional		
TMHW	Tabletop, Metal lid, Hardwired, Qty 2	+7,492
TMPI	Tabletop, Metal lid, Plug In, Qty 2	+6,382
UMHW	Undermount, Hardwired, Qty 4	+4,076
UMPI	Undermount, Plug In, Qty 4	+2,964

Wire Management Column (sold separately)

Required with any technology selection	
Pattern Number: 02WMC6X6	227
Pattern Number: 02WMC10X10	885

Step 1. Metal Finish for Wire Management Column		6x6	10x10
MC _ _	Powder Coat	+0	+0
PM01	Polished Chrome	+1,065	+458
PM02	Satin Nickel	+1,065	+458
PM03	Oil Rubbed Bronze	+1,595	+2,220

Please consult **page 7** for the palette of DatesWeiser finishes. Natural stone, non-standard glass and veneer, and other technology options are available. Please email **customerservice@datesweiser.com** for a custom quote. Consult technical information on **page 274** for construction details and technical information.

Highline Boat Conference Table

48”x120”/ 10 Person
02B48X120

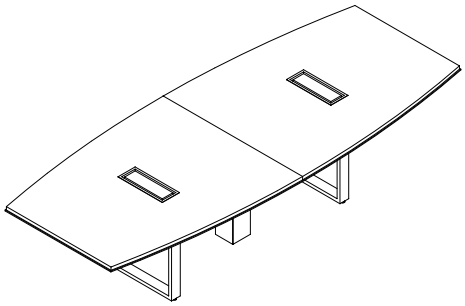

Starting Price: $17,084

48/36x120 table, veneer Tier 1 top with metal edge, open base, powder coat metal finish

Pattern Number: 02B48X120

Step 1. Top Material	
V	Veneer
G	Glass
C	Corian
Q	Caesarstone

Step 2. Edge Selection/Finish		
AU_ _	Spinneybeck Leather: Acqua	+2,840
MC _ _	Powder Coat	+0
PM01	Polished Chrome	+1,810
PM02	Satin Nickel	+2,132
PM03	Oil Rubbed Bronze	+5,202

Step 3. Base Type		
BL	Base Loop	+0

Step 4. Top Finish		
T1 _ _	Veneer Tier 1	+0
T2 _ _	Veneer Tier 2	+920
GC _ _	Clear Glass, back painted	+6,000
GE _ _	Etched matte Glass, back painted	+7,200
CS01	Corian Glacier White	+9,600
QS _ _	Caesarstone	+19,000

Step 5. Base Finish		
MC _ _	Powder Coat	+0
PM01	Polished Chrome	+1,810
PM02	Satin Nickel	+2,132
PM03	Oil Rubbed Bronze	+5,202

Step 6. Microphone and/or Grommet Accommodations: Optional		
MA _ _	Microphone hole (factory cut)	Qty _ _ x 321 each
GM _ _	2” Grommet Hole (factory cut), liner, lid, in matching metal finish	Qty _ _ x 423 each

Step 7. Power & Connectivity Access: Optional		
TMHW	Tabletop, Metal lid, Hardwired, Qty 2	+7,492
TMPI	Tabletop, Metal lid, Plug In, Qty 2	+6,382
UMHW	Undermount, Hardwired, Qty 6	+6,114
UMPI	Undermount, Plug In, Qty 6	+4,446

Wire Management Column (sold separately)

Required with any technology selection	
Pattern Number: 02WMC6X6	227
Pattern Number: 02WMC10X10	885

Step 1. Metal Finish for Wire Management Column		6x6	10x10
MC _ _	Powder Coat	+0	+0
PM01	Polished Chrome	+1,065	+485
PM02	Satin Nickel	+1,065	+485
PM03	Oil Rubbed Bronze	+1,595	+2,220

Please consult **page 7** for the palette of DatesWeiser finishes. Natural stone, non-standard glass and veneer, and other technology options are available. Please email **customerservice@datesweiser.com** for a custom quote. Consult technical information on **page 274** for construction details and technical information.

Highline Boat Conference Table

60”x120”/ 10 Person
02B60X120

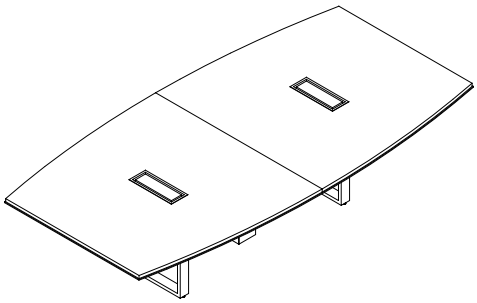

Starting Price: $17,280

60/48 x120 table, veneer Tier 1 top with metal edge, open base, powder coat metal finish

Pattern Number: 02B60X120

Step 1. Top Material	
V	Veneer
G	Glass
C	Corian
Q	Caesarstone

Step 2. Edge Selection/Finish		
AU_ _	Spinneybeck Leather: Acqua	+3,056
MC _ _	Powder Coat	+0
PM01	Polished Chrome	+1,810
PM02	Satin Nickel	+2,116
PM03	Oil Rubbed Bronze	+5,628

Step 3. Base Type		
BL	Base Loop	+0

Step 4. Top Finish		
T1 _ _	Veneer Tier 1	+0
T2 _ _	Veneer Tier 2	+1,150
GC _ _	Clear Glass, back painted	+7,500
GE _ _	Etched matte Glass, back painted	+9,000
CS01	Corian Glacier White	+12,000
QS _ _	Caesarstone	+23,750

Step 5. Base Finish		
MC _ _	Powder Coat	+0
PM01	Polished Chrome	+1,810
PM02	Satin Nickel	+2,116
PM03	Oil Rubbed Bronze	+5,628

Step 6. Microphone and/or Grommet Accommodations: Optional		
MA _ _	Microphone hole (factory cut)	Qty _ _ x 321 each
GM _ _	2” Grommet Hole (factory cut), liner, lid, in matching metal finish	Qty _ _ x 423 each

Step 7. Power & Connectivity Access: Optional		
TMHW	Tabletop, Metal lid, Hardwired, Qty 2	+7,492
TMPI	Tabletop, Metal lid, Plug In, Qty 2	+6,382
UMHW	Undermount, Hardwired, Qty 6	+6,114
UMPI	Undermount, Plug In, Qty 6	+4,446

Wire Management Column (sold separately)

Required with any technology selection	
Pattern Number: 02WMC6X6	227
Pattern Number: 02WMC10X10	885

Step 1. Metal Finish for Wire Management Column		6x6	10x10
MC _ _	Powder Coat	+0	+0
PM01	Polished Chrome	+1,065	+485
PM02	Satin Nickel	+1,065	+485
PM03	Oil Rubbed Bronze	+1,595	+2,220

Please consult **page 7** for the palette of DatesWeiser finishes. Natural stone, non-standard glass and veneer, and other technology options are available. Please email **customerservice@datesweiser.com** for a custom quote. Consult technical information on **page 274** for construction details and technical information.

Highline Boat Conference Table

60”x132”/ 10 Person
02B60X132

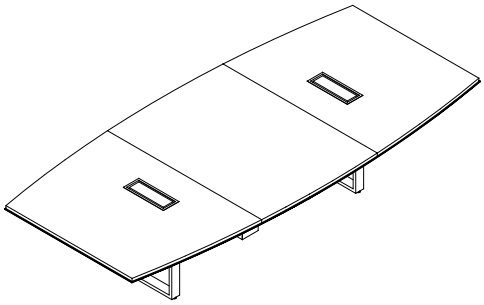

Starting Price: $20,296

60/48x132 table, veneer Tier 1 top with metal edge, open base, powder coat metal finish

Pattern Number: 02B60X132

Step 1. Top Material	
V	Veneer
G	Glass
C	Corian
Q	Caesarstone

Step 2. Edge Selection/Finish		
AU_ _	Spinneybeck Leather: Acqua	+3,271
MC _ _	Powder Coat	+0
PM01	Polished Chrome	+2,437
PM02	Satin Nickel	+2,743
PM03	Oil Rubbed Bronze	+7,140

Step 3. Base Type		
BL	Base Loop	+0

Step 4. Top Finish		
T1 _ _	Veneer Tier 1	+0
T2 _ _	Veneer Tier 2	+1,265
GC _ _	Clear Glass, back painted	+8,250
GE _ _	Etched matte Glass, back painted	+9,900
CS01	Corian Glacier White	+13,200
QS _ _	Caesarstone	+26,125

Step 5. Base Finish		
MC _ _	Powder Coat	+0
PM01	Polished Chrome	+2,437
PM02	Satin Nickel	+2,743
PM03	Oil Rubbed Bronze	+7,140

Step 6. Microphone and/or Grommet Accommodations: Optional		
MA _ _	Microphone hole (factory cut)	Qty _ _ x 321 each
GM _ _	2” Grommet Hole (factory cut), liner, lid, in matching metal finish	Qty _ _ x 423 each

Step 7. Power & Connectivity Access: Optional		
TMHW	Tabletop, Metal lid, Hardwired, Qty 2	+7,492
TMPI	Tabletop, Metal lid, Plug In, Qty 2	+6,382
UMHW	Undermount, Hardwired, Qty 6	+6,114
UMPI	Undermount, Plug In, Qty 6	+4,446

Wire Management Column (sold separately)

Required with any technology selection	
Pattern Number: 02WMC6X6	227
Pattern Number: 02WMC10X10	885

Step 1. Metal Finish for Wire Management Column		6x6	10x10
MC _ _	Powder Coat	+0	+0
PM01	Polished Chrome	+1,065	+458
PM02	Satin Nickel	+1,065	+458
PM03	Oil Rubbed Bronze	+1,595	2,220

Please consult **page 7** for the palette of DatesWeiser finishes. Natural stone, non-standard glass and veneer, and other technology options are available. Please email **customerservice@datesweiser.com** for a custom quote. Consult technical information on **page 274** for construction details and technical information.

Highline Boat Conference Table

60”x144”/ 10 Person
02B60X144

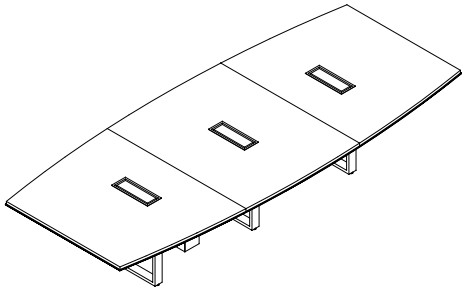

Starting Price: $22,720

60/48x144 table, veneer Tier 1 top with metal edge, open base, powder coat metal finish

Pattern Number: 02B60X144

Step 1. Top Material	
V	Veneer
G	Glass
C	Corian
Q	Caesarstone

Step 2. Edge Selection Finish		
AU_ _	Spinneybeck Leather: Acqua	+3,487
MC _ _	Powder Coat	+0
PM01	Polished Chrome	+2,379
PM02	Satin Nickel	+2,838
PM03	Oil Rubbed Bronze	+7,668

Step 3. Base Type		
BL	Base Loop	+0

Step 4. Top Finish		
T1 _ _	Veneer Tier 1	+0
T2 _ _	Veneer Tier 2	+1,380
GC _ _	Clear Glass, back painted	+9,000
GE _ _	Etched matte Glass, back painted	+10,800
CS01	Corian Glacier White	+14,400
QS _ _	Caesarstone	+28,500

Step 5. Base Finish		
MC _ _	Powder Coat	+0
PM01	Polished Chrome	+2,379
PM02	Satin Nickel	+2,838
PM03	Oil Rubbed Bronze	+7,668

Step 6. Microphone and/or Grommet Accommodations: Optional		
MA _ _	Microphone hole (factory cut)	Qty _ _ x 321 each
GM _ _	2” Grommet Hole (factory cut), liner, lid, in matching metal finish	Qty _ _ x 423 each

Step 7. Power & Connectivity Access: Optional		
TMHW	Tabletop, Metal lid, Hardwired, Qty 3	+11,238
TMPI	Tabletop, Metal lid, Plug In, Qty 3	+9,573
UMHW	Undermount, Hardwired, Qty 6	+6,114
UMPI	Undermount, Plug In, Qty 6	+4,446

Wire Management Column (sold separately)

Required with any technology selection

Pattern Number: 02WMC6X6	227
Pattern Number: 02WMC10X10	885

Step 1. Metal Finish for Wire Management Column		6x6	10x10
MC _ _	Powder Coat	+0	+0
PM01	Polished Chrome	+1,065	+458
PM02	Satin Nickel	+1,065	+458
PM03	Oil Rubbed Bronze	+1,595	+2,220

Please consult **page 7** for the palette of DatesWeiser finishes. Natural stone, non-standard glass and veneer, and other technology options are available. Please email **customerservice@datesweiser.com** for a custom quote. Consult technical information on **page 274** for construction details and technical information.

Highline Boat Conference Table

60”x156”/ 10 Person
02B60X156

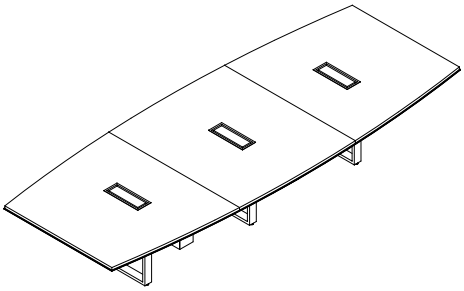

Starting Price: $23,469

60/48x156 table, veneer Tier 1 top with metal edge, open base, powder coat metal finish

Pattern Number: 02B60X156

Step 1. Top Material	
V	Veneer
G	Glass
C	Corian
Q	Caesarstone

Step 2. Edge Selection/Finish		
AU_ _	Spinneybeck Leather: Acqua	+3,701
MC _ _	Powder Coat	+0
PM01	Polished Chrome	+2,379
PM02	Satin Nickel	+2,838
PM03	Oil Rubbed Bronze	+7,668

Step 3. Base Type		
BL	Base Loop	+0

Step 4. Top Finish		
T1 _ _	Veneer Tier 1	+0
T2 _ _	Veneer Tier 2	+1,495
GC _ _	Clear Glass, back painted	+9,750
GE _ _	Etched matte Glass, back painted	+11,700
CS01	Corian Glacier White	+15,600
QS _ _	Caesarstone	+30,875

Step 5. Base Finish		
MC _ _	Powder Coat	+0
PM01	Polished Chrome	+2,379
PM02	Satin Nickel	+2,838
PM03	Oil Rubbed Bronze	+7,668

Step 6. Microphone and/or Grommet Accommodations: Optional		
MA _ _	Microphone hole (factory cut)	Qty _ _ x 321 each
GM _ _	2” Grommet Hole (factory cut), liner, lid, in matching metal finish	Qty _ _ x 423 each

Step 7. Power & Connectivity Access: Optional		
TMHW	Tabletop, Metal lid, Hardwired, Qty 3	+11,238
TMPI	Tabletop, Metal lid, Plug In, Qty 3	+9,573
UMHW	Undermount, Hardwired, Qty 6	+6,114
UMPI	Undermount, Plug In, Qty 6	+4,446

Wire Management Column (sold separately)

Required with any technology selection

Pattern Number: 02WMC6X6	227
Pattern Number: 02WMC10X10	885

Step 1. Metal Finish for Wire Management Column		6x6	10x10
MC _ _	Powder Coat	+0	+0
PM01	Polished Chrome	+1,065	+458
PM02	Satin Nickel	+1,065	+458
PM03	Oil Rubbed Bronze	+1,595	+2,220

Please consult **page 7** for the palette of DatesWeiser finishes. Natural stone, non-standard glass and veneer, and other technology options are available. Please email **customerservice@datesweiser.com** for a custom quote. Consult technical information on **page 274** for construction details and technical information.

Highline Boat Conference Table

60”x168”/ 12 Person
02B60X168

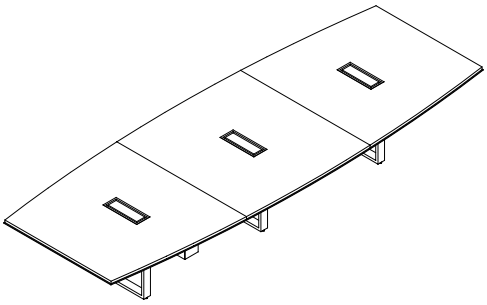

Starting Price: $24,991

60/48x168 table, veneer Tier 1 top with metal edge, open base, powder coat metal finish

Pattern Number: 02B60X168

Step 1. Top Material	
V	Veneer
G	Glass
C	Corian
Q	Caesarstone

Step 2. Edge Selection/Finish		
AU_ _	Spinneybeck Leather: Acqua	+3,917
MC _ _	Powder Coat	+0
PM01	Polished Chrome	+2,408
PM02	Satin Nickel	+2,867
PM03	Oil Rubbed Bronze	+7,668

Step 3. Base Type		
BL	Base Loop	+0

Step 4. Top Finish		
T1 _ _	Veneer Tier 1	+0
T2 _ _	Veneer Tier 2	+1,610
GC _ _	Clear Glass, back painted	+10,500
GE _ _	Etched matte Glass, back painted	+12,600
CS01	Corian Glacier White	+16,800
QS _ _	Caesarstone	+33,250

Step 5. Base Finish		
MC _ _	Powder Coat	+0
PM01	Polished Chrome	+2,408
PM02	Satin Nickel	+2,867
PM03	Oil Rubbed Bronze	+7,668

Step 6. Microphone and/or Grommet Accommodations: Optional		
MA _ _	Microphone hole (factory cut)	Qty _ _ x 321 each
GM _ _	2” Grommet Hole (factory cut), liner, lid, in matching metal finish	Qty _ _ x 423 each

Step 7. Power & Connectivity Access: Optional		
TMHW	Tabletop, Metal lid, Hardwired, Qty 3	+11,238
TMPI	Tabletop, Metal lid, Plug In, Qty 3	+9,573
UMHW	Undermount, Hardwired, Qty 6	+6,114
UMPI	Undermount, Plug In, Qty 6	+4,446

Wire Management Column (sold separately)

Required with any technology selection	
Pattern Number: 02WMC6X6	227
Pattern Number: 02WMC10X10	885

Step 1. Metal Finish for Wire Management Column		6x6	10x10
MC _ _	Powder Coat	+0	+0
PM01	Polished Chrome	+1,065	+458
PM02	Satin Nickel	+1,065	+458
PM03	Oil Rubbed Bronze	+1,595	+2,220

Please consult **page 7** for the palette of DatesWeiser finishes. Natural stone, non-standard glass and veneer, and other technology options are available. Please email **customerservice@datesweiser.com** for a custom quote. Consult technical information on **page 274** for construction details and technical information.

Highline Boat Conference Table

72”x180”/ 16 Person
02B72X180

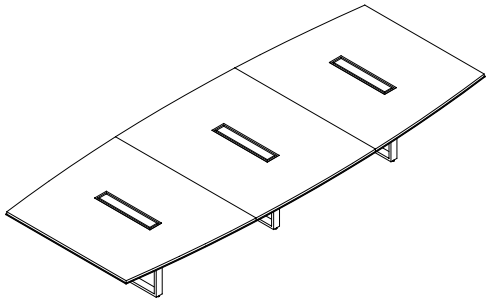

Starting Price: $29,795

72/60x180 table, veneer Tier 1 top with metal edge, open base, powder coat metal finish

Pattern Number: 02B72X180

Step 1. Top Material	
V	Veneer
G	Glass
C	Corian
Q	Caesarstone

Step 2. Edge Selection/Finish		
AU_ _	Spinneybeck Leather: Acqua	+4,347
MC _ _	Powder Coat	+0
PM01	Polished Chrome	+2,418
PM02	Satin Nickel	+2,877
PM03	Oil Rubbed Bronze	+7,668

Step 3. Base Type		
BL	Base Loop	+0

Step 4. Top Finish		
T1 _ _	Veneer Tier 1	+0
T2 _ _	Veneer Tier 2	+2,070
GC _ _	Clear Glass, back painted	+13,500
GE _ _	Etched matte Glass, back painted	+16,200
CS01	Corian Glacier White	+21,600
QS _ _	Caesarstone*	+42,750

Step 5. Base Finish		
MC _ _	Powder Coat	+0
PM01	Polished Chrome	+2,418
PM02	Satin Nickel	+2,877
PM03	Oil Rubbed Bronze	+7,668

Step 6. Microphone and/or Grommet Accommodations: Optional		
MA _ _	Microphone hole (factory cut)	Qty _ _ x 321 each
GM _ _	2” Grommet Hole (factory cut), liner, lid, in matching metal finish	Qty _ _ x 423 each

Step 7. Power & Connectivity Access: Optional		
TMHW	Tabletop, Metal lid, Hardwired, Qty 3	+14,721
TMPI	Tabletop, Metal lid, Plug In, Qty 3	+12,603
UMHW	Undermount, Hardwired, Qty 8	+8,152
UMPI	Undermount, Plug In, Qty 8	+5,928

Wire Management Column (sold separately)

Required with any technology selection

Pattern Number: 02WMC6X6	227
Pattern Number: 02WMC10X10	885

Step 1. Metal Finish for Wire Management Column		6x6	10x10
MC _ _	Powder Coat	+0	+0
PM01	Polished Chrome	+1,065	+485
PM02	Satin Nickel	+1,065	+485
PM03	Oil Rubbed Bronze	+1,595	+2,220

Please consult **page 7** for the palette of DatesWeiser finishes. Natural stone, non-standard glass and veneer, and other technology options are available. Please email **customerservice@datesweiser.com** for a custom quote. Consult technical information on **page 274** for construction details and technical information.

*Tables with a Caesarstone finish require a 4-section top.

Highline Boat Conference Table

72”x192”/ 16 Person
02B72X192

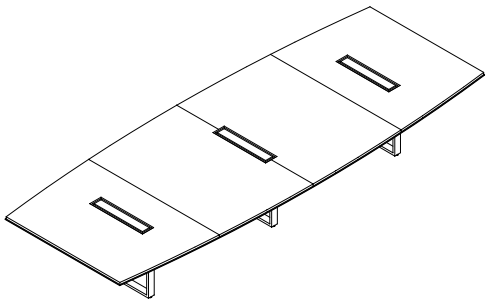

Starting Price: $31,453

72/60x192 table, veneer Tier 1 top with metal edge, open base, powder coat metal finish

Pattern Number: 02B72X192

Step 1. Top Material	
V	Veneer
G	Glass
C	Corian
Q	Caesarstone

Step 2. Edge Selection/Finish		
AU_ _	Spinneybeck Leather: Acqua	+4,563
MC _ _	Powder Coat	+0
PM01	Polished Chrome	+2,838
PM02	Satin Nickel	+3,297
PM03	Oil Rubbed Bronze	+9,004

Step 3. Base Type		
BL	Base Loop	+0

Step 4. Top Finish		
T1 _ _	Veneer Tier 1	+0
T2 _ _	Veneer Tier 2	+2,208
GC _ _	Clear Glass, back painted	+14,400
GE _ _	Etched matte Glass, back painted	+17,280
CS01	Corian Glacier White	+23,040
QS_ _	Caesarstone	+45,600

Step 5. Base Finish		
MC _ _	Powder Coat	+0
PM01	Polished Chrome	+2,838
PM02	Satin Nickel	+3,297
PM03	Oil Rubbed Bronze	+9,004

Step 6. Microphone and/or Grommet Accommodations: Optional		
MA _ _	Microphone hole (factory cut)	Qty _ _ x 321 each
GM _ _	2” Grommet Hole (factory cut), liner, lid, in matching metal finish	Qty _ _ x 423 each

Step 7. Power & Connectivity Access: Optional		
TMHW	Tabletop, Metal lid, Hardwired, Qty 3	+14,271
TMPI	Tabletop, Metal lid, Plug In, Qty 3	+12,603
UMHW	Undermount, Hardwired, Qty 8	+8,152
UMPI	Undermount, Plug In, Qty 8	+5,928

Wire Management Column (sold separately)

Required with any technology selection	
Pattern Number: 02WMC6X6	227
Pattern Number: 02WMC10X10	885

Step 1. Metal Finish for Wire Management Column		6x6	10x10
MC _ _	Powder Coat	+0	+0
PM01	Polished Chrome	+1,065	+458
PM02	Satin Nickel	+1,065	+458
PM03	Oil Rubbed Bronze	+1,595	+2,220

Please consult **page 7** for the palette of DatesWeiser finishes. Natural stone, non-standard glass and veneer, and other technology options are available. Please email **customerservice@datesweiser.com** for a custom quote. Consult technical information on **page 274** for construction details and technical information.

Highline Boat Conference Table

72”x204”/ 16 Person
02B72X204

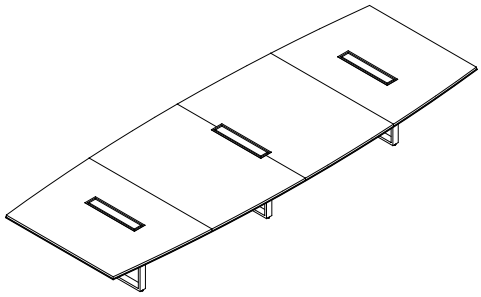

Starting Price: $32,424

72/60x204 table, veneer Tier 1 top with metal edge, open base, powder coat metal finish

Pattern Number: 02B72X204

Step 1. Top Material	
V	Veneer
G	Glass
C	Corian
Q	Caesarstone

Step 2. Edge Selection/Finish		
AU_ _	Spinneybeck Leather: Acqua	+4,779
MC _ _	Powder Coat	+0
PM01	Polished Chrome	+2,838
PM02	Satin Nickel	+3,297
PM03	Oil Rubbed Bronze	+9,004

Step 3. Base Type		
BL	Base Loop	+0

Step 4. Top Finish		
T1 _ _	Veneer Tier 1	+0
T2 _ _	Veneer Tier 2	+2,346
GC _ _	Clear Glass, back painted	+15,300
GE _ _	Etched matte Glass, back painted	+18,360
CS01	Corian Glacier White	+24,480
QS _ _	Caesarstone	+48,450

Step 5. Base Finish		
MC _ _	Powder Coat	+0
PM01	Polished Chrome	+2,838
PM02	Satin Nickel	+3,297
PM03	Oil Rubbed Bronze	+9,004

Step 6. Microphone and/or Grommet Accommodations: Optional		
MA _ _	Microphone hole (factory cut)	Qty _ _ x 321 each
GM _ _	2” Grommet Hole (factory cut), liner, lid, in matching metal finish	Qty _ _ x 423 each

Step 7. Power & Connectivity Access: Optional		
TMHW	Tabletop, Metal lid, Hardwired, Qty 3	+14,271
TMPI	Tabletop, Metal lid, Plug In, Qty 3	+12,603
UMHW	Undermount, Hardwired, Qty 8	+8,152
UMPI	Undermount, Plug In, Qty 8	+5,928

Wire Management Column (sold separately)

Required with any technology selection	
Pattern Number: 02WMC6X6	227
Pattern Number: 02WMC10X10	885

Step 1. Metal Finish for Wire Management Column		6x6	10x10
MC _ _	Powder Coat	+0	+0
PM01	Polished Chrome	+1,065	+458
PM02	Satin Nickel	+1,065	+458
PM03	Oil Rubbed Bronze	+1,595	+2,220

Please consult **page 7** for the palette of DatesWeiser finishes. Natural stone, non-standard glass and veneer, and other technology options are available. Please email **customerservice@datesweiser.com** for a custom quote. Consult technical information on **page 274** for construction details and technical information.

Highline Boat Conference Table

72”x216”/ 18 Person
02B72X216

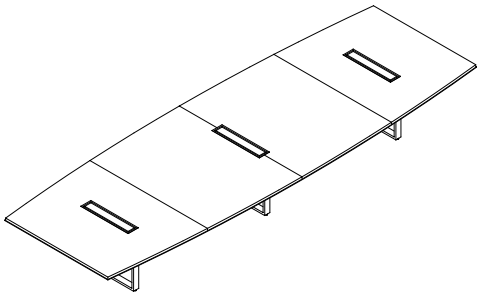

Starting Price: $33,999

72/60x216 table, veneer Tier 1 top with metal edge, open base, powder coat metal finish

Pattern Number: 02B72X216

Step 1. Top Material	
V	Veneer
G	Glass
C	Corian
Q	Caesarstone

Step 2. Edge Selection/Finish		
AU_ _	Spinneybeck Leather: Acqua	+4,993
MC _ _	Powder Coat	+0
PM01	Polished Chrome	+2,838
PM02	Satin Nickel	+3,297
PM03	Oil Rubbed Bronze	+9,043

Step 3. Base Type		
BL	Base Loop	+0

Step 4. Top Finish		
T1 _ _	Veneer Tier 1	+0
T2 _ _	Veneer Tier 2	+2,484
GC _ _	Clear Glass, back painted	+16,200
GE _ _	Etched matte Glass, back painted	+19,440
CS01	Corian Glacier White	+25,920
QS _ _	Caesarstone	+51,300

Step 5. Base Finish		
MC _ _	Powder Coat	+0
PM01	Polished Chrome	+2,838
PM02	Satin Nickel	+3,297
PM03	Oil Rubbed Bronze	+9,043

Step 6. Microphone and/or Grommet Accommodations: Optional		
MA _ _	Microphone hole (factory cut)	Qty _ _ x 321 each
GM _ _	2” Grommet Hole (factory cut), liner, lid, in matching metal finish	Qty _ _ x 423 each

Step 7. Power & Connectivity Access: Optional		
TMHW	Tabletop, Metal lid, Hardwired, Qty 3	+14,271
TMPI	Tabletop, Metal lid, Plug In, Qty 3	+12,603
UMHW	Undermount, Hardwired, Qty 8	+8,152
UMPI	Undermount, Plug In, Qty 8	+5,928

Wire Management Column (sold separately)

Required with any technology selection	
Pattern Number: 02WMC6X6	227
Pattern Number: 02WMC10X10	885

Step 1. Metal Finish for Wire Management Column		6x6	10x10
MC _ _	Powder Coat	+0	+0
PM01	Polished Chrome	+1,065	+458
PM02	Satin Nickel	+1,065	+458
PM03	Oil Rubbed Bronze	+1,595	+2,220

Please consult **page 7** for the palette of DatesWeiser finishes. Natural stone, non-standard glass and veneer, and other technology options are available. Please email **customerservice@datesweiser.com** for a custom quote. Consult technical information on **page 274** for construction details and technical information.

Highline Boat Conference Table

72”x228”/ 18 Person
02B72X228

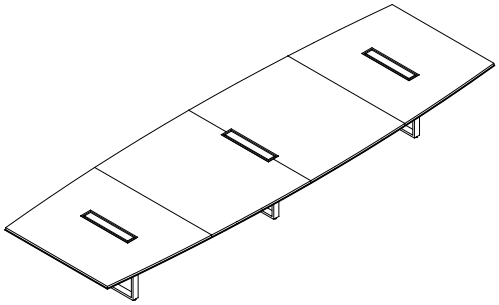

Starting Price: $34,519

72/60x228 table, veneer Tier 1 top with metal edge, open base, powder coat metal finish

Pattern Number: 02B72X228

Step 1. Top Material	
V	Veneer
G	Glass
C	Corian
Q	Caesarstone

Step 2. Edge Selection/Finish		
AU_ _	Spinneybeck Leather: Acqua	+5,209
MC _ _	Powder Coat	+0
PM01	Polished Chrome	+2,877
PM02	Satin Nickel	+3,336
PM03	Oil Rubbed Bronze	+9,043

Step 3. Base Type		
BL	Base Loop	+0

Step 4. Top Finish		
T1 _ _	Veneer Tier 1	+0
T2 _ _	Veneer Tier 2	+2,622
GC _ _	Clear Glass, back painted	+17,100
GE _ _	Etched matte Glass, back painted	+20,520
CS01	Corian Glacier White	+27,360
QS _ _	Caesarstone*	+54,150

Step 5. Base Finish		
MC _ _	Powder Coat	+0
PM01	Polished Chrome	+2,877
PM02	Satin Nickel	+3,336
PM03	Oil Rubbed Bronze	+9,043

Step 6. Microphone and/or Grommet Accommodations: Optional		
MA _ _	Microphone hole (factory cut)	Qty _ _ x 321 each
GM _ _	2” Grommet Hole (factory cut), liner, lid, in matching metal finish	Qty _ _ x 423 each

Step 7. Power & Connectivity Access: Optional		
TMHW	Tabletop, Metal lid, Hardwired, Qty 3	+14,271
TMPI	Tabletop, Metal lid, Plug In, Qty 3	+12,603
UMHW	Undermount, Hardwired, Qty 8	+8,152
UMPI	Undermount, Plug In, Qty 8	+5,928

Wire Management Column (sold separately)

Required with any technology selection	
Pattern Number: 02WMC6X6	227
Pattern Number: 02WMC10X10	885

Step 1. Metal Finish for Wire Management Column		6x6	10x10
MC _ _	Powder Coat	+0	+0
PM01	Polished Chrome	+1,065	+458
PM02	Satin Nickel	+1,065	+458
PM03	Oil Rubbed Bronze	+1,595	+2,220

Please consult **page 7** for the palette of DatesWeiser finishes. Natural stone, non-standard glass and veneer, and other technology options are available. Please email **customerservice@datesweiser.com** for a custom quote. Consult technical information on **page 274** for construction details and technical information.

*Tables with a Caesarstone finish require a 5-section top.

Highline Boat Conference Table

72”x240”/ 20 Person
02B72X240

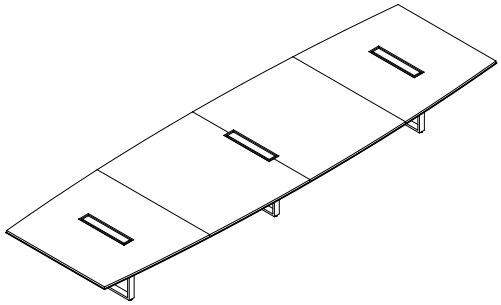

Starting Price: $36,604

72/60x240 table, veneer Tier 1 top with metal edge, open base, powder coat metal finish

Pattern Number: 02B72X240

Step 1. Top Material	
V	Veneer
G	Glass
C	Corian
Q	Caesarstone

Step 2. Edge Selection/Finish		
AU_ _	Spinneybeck Leather: Acqua	+5,425
MC _ _	Powder Coat	+0
PM01	Polished Chrome	+2,877
PM02	Satin Nickel	+3,336
PM03	Oil Rubbed Bronze	+9,043

Step 3. Base Type		
BL	Base Loop	+0

Step 5. Top Finish		
T1 _ _	Veneer Tier 1	+0
T2 _ _	Veneer Tier 2	+2,760
GC _ _	Clear Glass, back painted	+18,000
GE _ _	Etched matte Glass, back painted	+21,600
CS01	Corian Glacier White	+28,800
QS _ _	Caesarstone*	+57,000

Step 5. Base Finish		
MC _ _	Powder Coat	+0
PM01	Polished Chrome	+2,877
PM02	Satin Nickel	+3,336
PM03	Oil Rubbed Bronze	+9,043

Step 6. Microphone and/or Grommet Accommodations: Optional		
MA _ _	Microphone hole (factory cut)	Qty _ _ x 321 each
GM _ _	2” Grommet Hole (factory cut), liner, lid, in matching metal finish	Qty _ _ x 423 each

Step 7. Power & Connectivity Access: Optional		
TMHW	Tabletop, Metal lid, Hardwired, Qty 3	+14,271
TMPI	Tabletop, Metal lid, Plug In, Qty 3	+12,603
UMHW	Undermount, Hardwired, Qty 10	+10,190
UMPI	Undermount, Plug In, Qty 10	+7,410

Wire Management Column (sold separately)

Required with any technology selection	
Pattern Number: 02WMC6X6	227
Pattern Number: 02WMC10X10	885

Step 1. Metal Finish for Wire Management Column		6x6	10x10
MC _ _	Powder Coat	+0	+0
PM01	Polished Chrome	+1,065	+458
PM02	Satin Nickel	+1,065	+458
PM03	Oil Rubbed Bronze	+1,595	+2,220

Please consult **page 7** for the palette of DatesWeiser finishes. Natural stone, non-standard glass and veneer, and other technology options are available. Please email **customerservice@datesweiser.com** for a custom quote. Consult technical information on **page 274** for construction details and technical information.

*Tables with a Caesarstone finish require a 5-section top.

Highline Trapezoid Tables Index

48″–72″ width

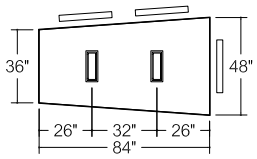

02T48X84
6 Person Table

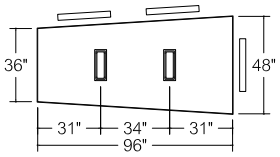

02T48X96
6 Person Table

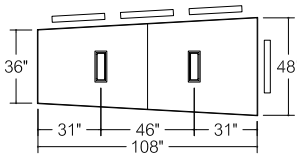

02T48X108
8 Person Table

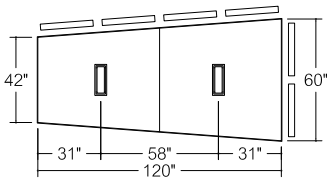

02T60X120
11 Person Table

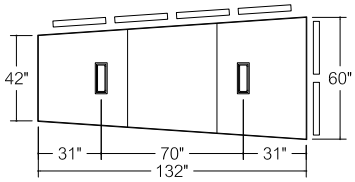

02T60X132
11 Person Table

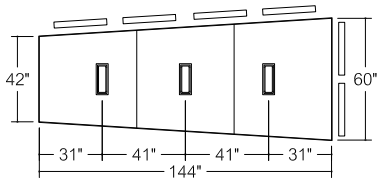

02T60X144
11 Person Table

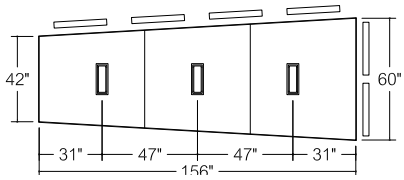

02T60X156
13 Person Table

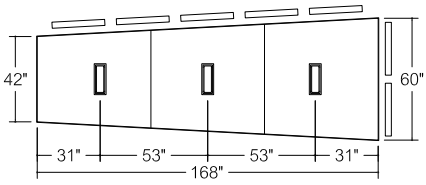

02T60X168
13 Person Table

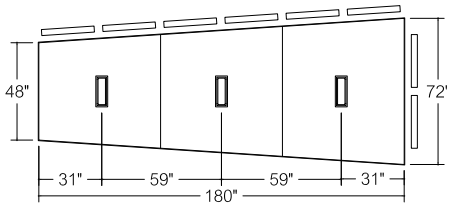

02T72X180
15 Person Table

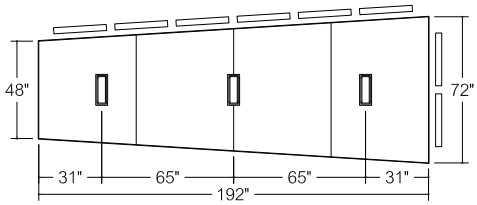

02T72X192
15 Person Table

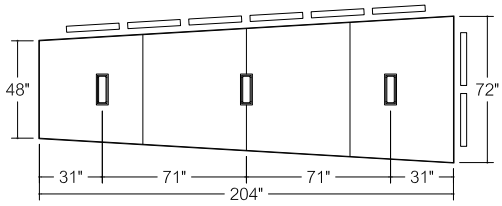

02T72X204
15 Person Table

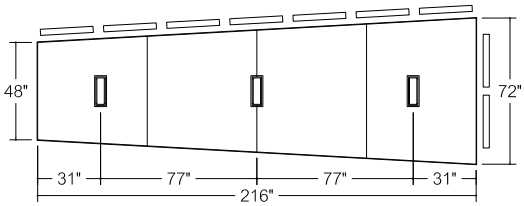

02T72X216
17 Person Table

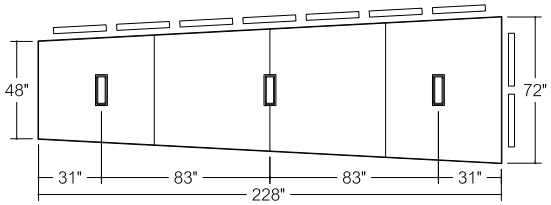

02T72X228
17 Person Table

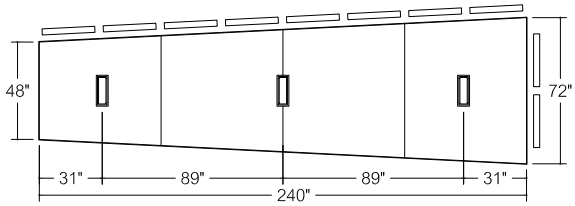

02T72X240
19 Person Table

Highline Trapezoid Conference Table

48”x84”/ 6 Person
02T48X84

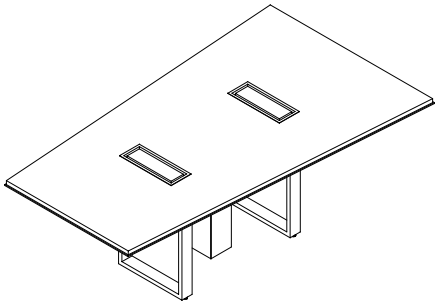

Starting Price: $10,150

48/36x84 table, veneer Tier 1 top with metal edge, open base, powder coat metal finish

Pattern Number: 02T48X84

Step 1. Top Material	
V	Veneer
G	Glass
C	Corian
Q	Caesarstone

Step 2. Edge Selection/Finish		
AU_ _	Spinneybeck Leather: Acqua	+1,809
MC _ _	Powder Coat	+0
PM01	Polished Chrome	+781
PM02	Satin Nickel	+444
PM03	Oil Rubbed Bronze	+752

Step 3. Base Type		
BL	Base Loop	+0

Step 4. Top Finish		
T1 _ _	Veneer Tier 1	+0
T2 _ _	Veneer Tier 2	+644
GC _ _	Clear Glass, back painted	+4,200
GE _ _	Etched matte Glass, back painted	+5,040
CS01	Corian Glacier White	+6,720
QS _ _	Caesarstone	+13,300

Step 5. Base Finish		
MC _ _	Powder Coat	+0
PM01	Polished Chrome	+781
PM02	Satin Nickel	+444
PM03	Oil Rubbed Bronze	+752

Step 6. Microphone and/or Grommet Accommodations: Optional		
MA _ _	Microphone hole (factory cut)	Qty _ _ x 321 each
GM _ _	2” Grommet Hole (factory cut), liner, lid, in matching metal finish	Qty _ _ x 423 each

Step 7. Power & Connectivity Access: Optional		
TMHW	Tabletop, Metal lid, Hardwired, Qty 2	+7,492
TMPI	Tabletop, Metal lid, Plug In, Qty 2	+6,382
UMHW	Undermount, Hardwired, Qty 4	+4,076
UMPI	Undermount, Plug In, Qty 4	+2,964

Wire Management Column (sold separately)

Required with any technology selection	
Pattern Number: 02WMC6X6	227
Pattern Number: 02WMC10X10	885

Step 1. Metal Finish for Wire Management Column		6x6	10x10
MC _ _	Powder Coat	+0	+0
PM01	Polished Chrome	+1,065	+458
PM02	Satin Nickel	+1,065	+458
PM03	Oil Rubbed Bronze	+1,595	+2,220

Please consult **page 7** for the palette of DatesWeiser finishes. Natural stone, non-standard glass and veneer, and other technology options are available. Please email **customerservice@datesweiser.com** for a custom quote. Consult technical information on **page 274** for construction details and technical information.

Highline Trapezoid Conference Table

48”x96”/ 6 Person
02T48X96

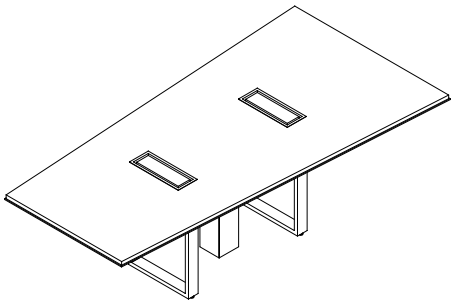

Starting Price: $10,892

48/36x96 table, veneer Tier 1 top with metal edge, open base, powder coat metal finish

Pattern Number: 02T48X96

Step 1. Top Material	
V	Veneer
G	Glass
C	Corian
Q	Caesarstone

Step 2. Edge Selection/Finish		
AU_ _	Spinneybeck Leather: Acqua	+1,981
MC _ _	Powder Coat	+0
PM01	Polished Chrome	+781
PM02	Satin Nickel	+444
PM03	Oil Rubbed Bronze	+752

Step 3. Base Type		
BL	Base Loop	+0

Step 4. Top Finish		
T1 _ _	Veneer Tier 1	+0
T2 _ _	Veneer Tier 2	+736
GC _ _	Clear Glass, back painted	+4,800
GE _ _	Etched matte Glass, back painted	+5,760
CS01	Corian Glacier White	+7,680
QS _ _	Caesarstone	+15,200

Step 5. Base Finish		
MC _ _	Powder Coat	+0
PM01	Polished Chrome	+781
PM02	Satin Nickel	+444
PM03	Oil Rubbed Bronze	+752

Step 6. Microphone and/or Grommet Accommodations: Optional		
MA _ _	Microphone hole (factory cut)	Qty _ _ x 321 each
GM _ _	2” Grommet Hole (factory cut), liner, lid, in matching metal finish	Qty _ _ x 423 each

Step 7. Power & Connectivity Access: Optional		
TMHW	Tabletop, Metal lid, Hardwired, Qty 2	+7,492
TMPI	Tabletop, Metal lid, Plug In, Qty 2	+6,382
UMHW	Undermount, Hardwired, Qty 4	+4,076
UMPI	Undermount, Plug In, Qty 4	+2,964

Wire Management Column (sold separately)

Required with any technology selection

Pattern Number: 02WMC6X6	227
Pattern Number: 02WMC10X10	885

Step 1. Metal Finish for Wire Management Column		6x6	10x10
MC _ _	Powder Coat	+0	+0
PM01	Polished Chrome	+1,065	+458
PM02	Satin Nickel	+1,065	+458
PM03	Oil Rubbed Bronze	+1,595	+2,220

Please consult **page 7** for the palette of DatesWeiser finishes. Natural stone, non-standard glass and veneer, and other technology options are available. Please email **customerservice@datesweiser.com** for a custom quote. Consult technical information on **page 274** for construction details and technical information.

Highline Trapezoid Conference Table

48”x108”/ 8 Person
02T48X108

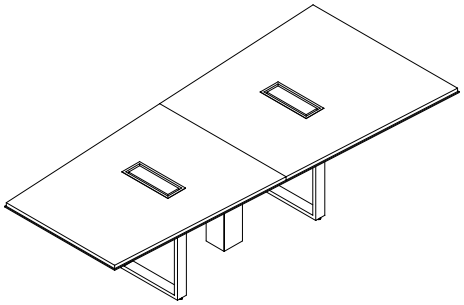

Starting Price: $11,286

48/36x108 table, veneer Tier 1 top with metal edge, open base, powder coat metal finish

Pattern Number: 02T48X108

Step 1. Top Material	
V	Veneer
G	Glass
C	Corian
Q	Caesarstone

Step 2. Edge Selection/Finish		
AU_ _	Spinneybeck Leather: Acqua	+2,152
MC _ _	Powder Coat	+0
PM01	Polished Chrome	+781
PM02	Satin Nickel	+444
PM03	Oil Rubbed Bronze	+752

Step 3. Base Type		
BL	Base Loop	+0

Step 4. Top Finish		
T1 _ _	Veneer Tier 1	+0
T2 _ _	Veneer Tier 2	+828
GC _ _	Clear Glass, back painted	+5,400
GE _ _	Etched matte Glass, back painted	+6,480
CS01	Corian Glacier White	+8,640
QS _ _	Caesarstone	+17,100

Step 5. Base Finish		
MC _ _	Powder Coat	+0
PM01	Polished Chrome	+781
PM02	Satin Nickel	+444
PM03	Oil Rubbed Bronze	+752

Step 6. Microphone and/or Grommet Accommodations: Optional		
MA _ _	Microphone hole (factory cut)	Qty _ _ x 321 each
GM _ _	2” Grommet Hole (factory cut), liner, lid, in matching metal finish	Qty _ _ x 423 each

Step 7. Power & Connectivity Access: Optional		
TMHW	Tabletop, Metal lid, Hardwired, Qty 2	+7,492
TMPI	Tabletop, Metal lid, Plug In, Qty 2	+6,382
UMHW	Undermount, Hardwired, Qty 4	+4,076
UMPI	Undermount, Plug In, Qty 4	+2,964

Wire Management Column (sold separately)

Required with any technology selection

Pattern Number: 02WMC6X6	227
Pattern Number: 02WMC10X10	885

Step 1. Metal Finish for Wire Management Column		6x6	10x10
MC _ _	Powder Coat	+0	+0
PM01	Polished Chrome	+1,065	+458
PM02	Satin Nickel	+1,065	+458
PM03	Oil Rubbed Bronze	+1,595	+2,220

Please consult **page 7** for the palette of DatesWeiser finishes. Natural stone, non-standard glass and veneer, and other technology options are available. Please email **customerservice@datesweiser.com** for a custom quote. Consult technical information on **page 274** for construction details and technical information.

Highline Trapezoid Conference Table

60”x120”/ 11 Person
02T60X120

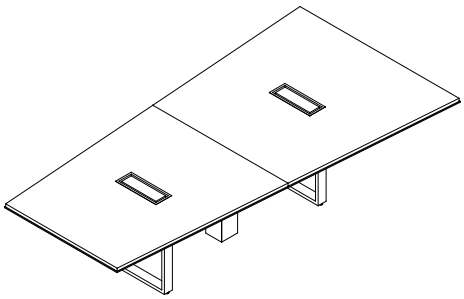

Starting Price: $14,046

60/42x120 table, veneer Tier 1 top with metal edge, open base, powder coat metal finish

Pattern Number: 02T60X120

Step 1. Top Material	
V	Veneer
G	Glass
C	Corian
Q	Caesarstone

Step 2. Edge Selection/Finish		
AU_ _	Spinneybeck Leather: Acqua	+2,456
MC _ _	Powder Coat	+0
PM01	Polished Chrome	+658
PM02	Satin Nickel	+197
PM03	Oil Rubbed Bronze	+608

Step 3. Base Type		
BL	Base Loop	+0

Step 4. Top Finish		
T1 _ _	Veneer Tier 1	+0
T2 _ _	Veneer Tier 2	+1,150
GC _ _	Clear Glass, back painted	+7,500
GE _ _	Etched matte Glass, back painted	+9,000
CS01	Corian Glacier White	+12,000
QS _ _	Caesarstone	+23,750

Step 5. Base Finish		
MC _ _	Powder Coat	+0
PM01	Polished Chrome	+658
PM02	Satin Nickel	+197
PM03	Oil Rubbed Bronze	+608

Step 6. Microphone and/or Grommet Accommodations: Optional		
MA _ _	Microphone hole (factory cut)	Qty _ _ x 321 each
GM _ _	2” Grommet Hole (factory cut), liner, lid, in matching metal finish	Qty _ _ x 423 each

Step 7. Power & Connectivity Access: Optional		
TMHW	Tabletop, Metal lid, Hardwired, Qty 2	+7,492
TMPI	Tabletop, Metal lid, Plug In, Qty 2	+6,382
UMHW	Undermount, Hardwired, Qty 6	+6,114
UMPI	Undermount, Plug In, Qty 6	+4,446

Wire Management Column (sold separately)

Required with any technology selection	
Pattern Number: 02WMC6X6	227
Pattern Number: 02WMC10X10	885

Step 1. Metal Finish for Wire Management Column		6x6	10x10
MC _ _	Powder Coat	+0	+0
PM01	Polished Chrome	+1,065	+458
PM02	Satin Nickel	+1,065	+458
PM03	Oil Rubbed Bronze	+1,595	+2,220

Please consult **page 7** for the palette of DatesWeiser finishes. Natural stone, non-standard glass and veneer, and other technology options are available. Please email **customerservice@datesweiser.com** for a custom quote. Consult technical information on **page 274** for construction details and technical information.

Highline Trapezoid Conference Table

60”x132”/ 11 Person
02T60X132

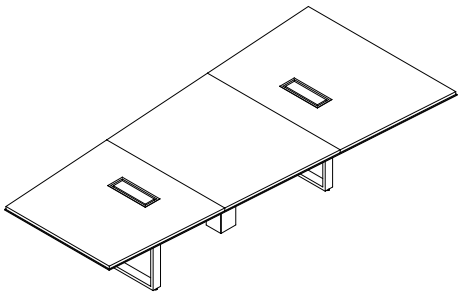

Starting Price: $16,925

60/42x132 table, veneer Tier 1 top with metal edge, open base, powder coat metal finish

Pattern Number: 02T60X132

Step 1. Top Material	
V	Veneer
G	Glass
C	Corian
Q	Caesarstone

Step 2. Edge Selection/Finish		
AU_ _	Spinneybeck Leather: Acqua	+2,627
MC _ _	Powder Coat	+0
PM01	Polished Chrome	+960
PM02	Satin Nickel	+394
PM03	Oil Rubbed Bronze	+702

Step 3. Base Type		
BL	Base Loop	+0

Step 4. Top Finish		
T1 _ _	Veneer Tier 1	+0
T2 _ _	Veneer Tier 2	+1,265
GC _ _	Clear Glass, back painted	+8,250
GE _ _	Etched matte Glass, back painted	+9,900
CS01	Corian Glacier White	+13,200
QS _ _	Caesarstone	+26,125

Step 5. Base Finish		
MC _ _	Powder Coat	+0
PM01	Polished Chrome	+960
PM02	Satin Nickel	+394
PM03	Oil Rubbed Bronze	+702

Step 6. Microphone and/or Grommet Accommodations: Optional		
MA _ _	Microphone hole (factory cut)	Qty _ _ x 321 each
GM _ _	2” Grommet Hole (factory cut), liner, lid, in matching metal finish	Qty _ _ x 423 each

Step 7. Power & Connectivity Access: Optional		
TMHW	Tabletop, Metal lid, Hardwired, Qty 2	+7,492
TMPI	Tabletop, Metal lid, Plug In, Qty 2	+6,382
UMHW	Undermount, Hardwired, Qty 6	+6,114
UMPI	Undermount, Plug In, Qty 6	+4,446

Wire Management Column (sold separately)

Required with any technology selection	
Pattern Number: 02WMC6X6	227
Pattern Number: 02WMC10X10	885

Step 1. Metal Finish for Wire Management Column		6x6	10x10
MC _ _	Powder Coat	+0	+0
PM01	Polished Chrome	+1,065	+458
PM02	Satin Nickel	+1,065	+458
PM03	Oil Rubbed Bronze	+1,595	+2,220

Please consult **page 7** for the palette of DatesWeiser finishes. Natural stone, non-standard glass and veneer, and other technology options are available. Please email **customerservice@datesweiser.com** for a custom quote. Consult technical information on **page 274** for construction details and technical information.

Highline Trapezoid Conference Table

60”x144”/ 11 Person
02T60X144

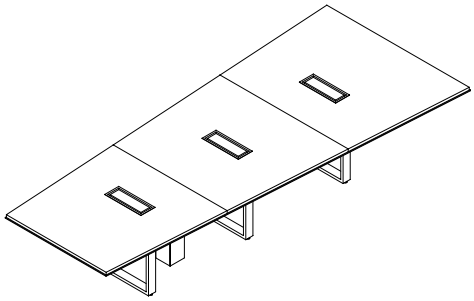

Starting Price:	$17,763

60/42x144 table, veneer Tier 1 top with metal edge, open base, powder coat metal finish

Pattern Number: 02T60X144

Step 1. Top Material	
V	Veneer
G	Glass
C	Corian
Q	Caesarstone

Step 2. Edge Selection/Finish		
AU_ _	Spinneybeck Leather: Acqua	+2,799
MC _ _	Powder Coat	+0
PM01	Polished Chrome	+960
PM02	Satin Nickel	+555
PM03	Oil Rubbed Bronze	+1,017

Step 3. Base Type		
BL	Base Loop	+0

Step 4. Top Finish		
T1 _ _	Veneer Tier 1	+0
T2 _ _	Veneer Tier 2	+1,380
GC _ _	Clear Glass, back painted	+9,000
GE _ _	Etched matte Glass, back painted	+10,800
CS01	Corian Glacier White	+14,400
QS _ _	Caesarstone	+28,500

Step 5. Base Finish		
MC _ _	Powder Coat	+0
PM01	Polished Chrome	+960
PM02	Satin Nickel	+555
PM03	Oil Rubbed Bronze	+1,017

Step 6. Microphone and/or Grommet Accommodations: Optional		
MA _ _	Microphone hole (factory cut)	Qty _ _ x 321 each
GM _ _	2” Grommet Hole (factory cut), liner, lid, in matching metal finish	Qty _ _ x 423 each

Step 7. Power & Connectivity Access: Optional		
TMHW	Tabletop, Metal lid, Hardwired, Qty 3	+11,238
TMPI	Tabletop, Metal lid, Plug In, Qty 3	+9,573
UMHW	Undermount, Hardwired, Qty 6	+6,114
UMPI	Undermount, Plug In, Qty 6	+4,446

Wire Management Column (sold separately)

Required with any technology selection

Pattern Number: 02WMC6X6	227
Pattern Number: 02WMC10X10	885

Step 1. Metal Finish for Wire Management Column		6x6	10x10
MC _ _	Powder Coat	+0	+0
PM01	Polished Chrome	+1,065	+458
PM02	Satin Nickel	+1,065	+458
PM03	Oil Rubbed Bronze	+1,595	+2,220

Please consult **page 7** for the palette of DatesWeiser finishes. Natural stone, non-standard glass and veneer, and other technology options are available. Please email **customerservice@datesweiser.com** for a custom quote. Consult technical information on **page 274** for construction details and technical information.

Highline Trapezoid Conference Table

60”x156”/ 13 Person
02T60X156

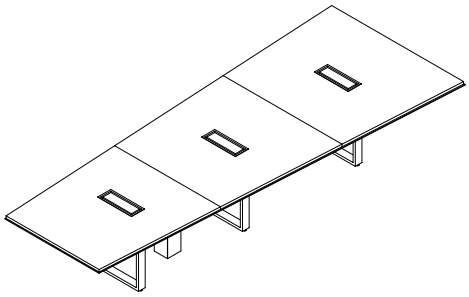

Starting Price: $18,201

60/42x156 table, veneer Tier 1 top with metal edge, open base, powder coat metal finish

Pattern Number: 02T60X156

Step 1. Top Material	
V	Veneer
G	Glass
C	Corian
Q	Caesarstone

Step 2. Edge Selection/Finish		
AU_ _	Spinneybeck Leather: Acqua	+2,971
MC _ _	Powder Coat	+0
PM01	Polished Chrome	+960
PM02	Satin Nickel	+555
PM03	Oil Rubbed Bronze	+1,017

Step 3. Base Type		
BL	Base Loop	+0

Step 4. Top Finish		
T1 _ _	Veneer Tier 1	+0
T2 _ _	Veneer Tier 2	+1,495
GC _ _	Clear Glass, back painted	+9,750
GE _ _	Etched matte Glass, back painted	+11,700
CS01	Corian Glacier White	+15,600
QS _ _	Caesarstone	+30,875

Step 5. Base Finish		
MC _ _	Powder Coat	+0
PM01	Polished Chrome	+960
PM02	Satin Nickel	+555
PM03	Oil Rubbed Bronze	+1,017

Step 6. Microphone and/or Grommet Accommodations: Optional		
MA _ _	Microphone hole (factory cut)	Qty _ _ x 321 each
GM _ _	2” Grommet Hole (factory cut), liner, lid, in matching metal finish	Qty _ _ x 423 each

Step 7. Power & Connectivity Access: Optional		
TMHW	Tabletop, Metal lid, Hardwired, Qty 3	+11,238
TMPI	Tabletop, Metal lid, Plug In, Qty 3	+9,573
UMHW	Undermount, Hardwired, Qty 6	+6,114
UMPI	Undermount, Plug In, Qty 6	+4,446

Wire Management Column (sold separately)

Required with any technology selection	
Pattern Number: 02WMC6X6	227
Pattern Number: 02WMC10X10	885

Step 1. Metal Finish for Wire Management Column		6x6	10x10
MC _ _	Powder Coat	+0	+0
PM01	Polished Chrome	+1,065	+458
PM02	Satin Nickel	+1,065	+458
PM03	Oil Rubbed Bronze	+1,595	2,220

Please consult **page 7** for the palette of DatesWeiser finishes. Natural stone, non-standard glass and veneer, and other technology options are available. Please email **customerservice@datesweiser.com** for a custom quote. Consult technical information on **page 274** for construction details and technical information.

Highline Trapezoid Conference Table

60”x168”/ 13 Person
02T60X168

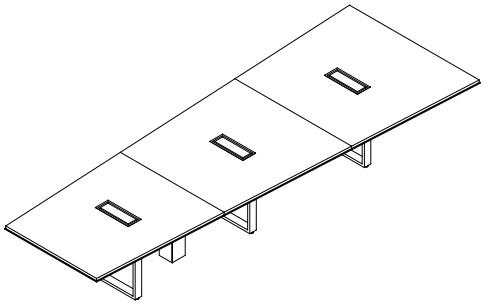

Starting Price: $19,404

60/42x168 table, veneer Tier 1 top with metal edge, open base, powder coat metal finish

Pattern Number: 02T60X168

Step 1. Top Material	
V	Veneer
G	Glass
C	Corian
Q	Caesarstone

Step 2. Edge Selection/Finish		
AU_ _	Spinneybeck Leather: Acqua	+3,142
MC _ _	Powder Coat	+0
PM01	Polished Chrome	+1,565
PM02	Satin Nickel	+733
PM03	Oil Rubbed Bronze	+1,150

Step 3. Base Type		
BL	Base Loop	+0

Step 4. Top Finish		
T1 _ _	Veneer Tier 1	+0
T2 _ _	Veneer Tier 2	+1,610
GC _ _	Clear Glass, back painted	+10,500
GE _ _	Etched matte Glass, back painted	+12,600
CS01	Corian Glacier White	+16,800
QS _ _	Caesarstone	+33,250

Step 5. Base Finish		
MC _ _	Powder Coat	+0
PM01	Polished Chrome	+1,565
PM02	Satin Nickel	+733
PM03	Oil Rubbed Bronze	+1,150

Step 6. Microphone and/or Grommet Accommodations: Optional		
MA _ _	Microphone hole (factory cut)	Qty _ _ x 321 each
GM _ _	2” Grommet Hole (factory cut), liner, lid, in matching metal finish	Qty _ _ x 423 each

Step 7. Power & Connectivity Access: Optional		
TMHW	Tabletop, Metal lid, Hardwired, Qty 3	+11,238
TMPI	Tabletop, Metal lid, Plug In, Qty 3	+9,573
UMHW	Undermount, Hardwired, Qty 6	+6,114
UMPI	Undermount, Plug In, Qty 6	+4,446

Wire Management Column (sold separately)

Required with any technology selection	
Pattern Number: 02WMC6X6	227
Pattern Number: 02WMC10X10	885

Step 1. Metal Finish for Wire Management Column		6x6	10x10
MC _ _	Powder Coat	+0	+0
PM01	Polished Chrome	+1,065	+458
PM02	Satin Nickel	+1,065	+458
PM03	Oil Rubbed Bronze	+1,595	+2,220

Please consult **page 7** for the palette of DatesWeiser finishes. Natural stone, non-standard glass and veneer, and other technology options are available. Please email **customerservice@datesweiser.com** for a custom quote. Consult technical information on **page 274** for construction details and technical information.

Highline Trapezoid Conference Table

72”x180”/ 15 Person
02T72X180

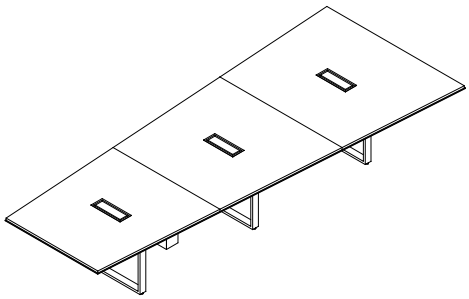

Starting Price: $23,079

72/48x180 table, veneer Tier 1 top with metal edge, open base, powder coat metal finish

Pattern Number: 02T72X180

Step 1. Top Material	
V	Veneer
G	Glass
C	Corian
Q	Caesarstone

Step 2. Edge Selection/Finish		
AU_ _	Spinneybeck Leather: Acqua	+3,446
MC _ _	Powder Coat	+0
PM01	Polished Chrome	+1,564
PM02	Satin Nickel	+725
PM03	Oil Rubbed Bronze	+1,408

Step 3. Base Type		
BL	Base Loop	+0

Step 4. Top Finish		
T1 _ _	Veneer Tier 1	+0
T2 _ _	Veneer Tier 2	+2,070
GC _ _	Clear Glass, back painted	+13,500
GE _ _	Etched matte Glass, back painted	+16,200
CS01	Corian Glacier White	+21,600
QS _ _	Caesarstone*	+42,750

Step 5. Base Finish		
MC _ _	Powder Coat	+0
PM01	Polished Chrome	+1,564
PM02	Satin Nickel	+725
PM03	Oil Rubbed Bronze	+1,408

Step 6. Microphone and/or Grommet Accommodations: Optional		
MA _ _	Microphone hole (factory cut)	Qty _ _ x 321 each
GM _ _	2” Grommet Hole (factory cut), liner, lid, in matching metal finish	Qty _ _ x 423 each

Step 7. Power & Connectivity Access: Optional		
TMHW	Tabletop, Metal lid, Hardwired, Qty 3	+11,238
TMPI	Tabletop, Metal lid, Plug In, Qty 3	+9,573
UMHW	Undermount, Hardwired, Qty 8	+8,152
UMPI	Undermount, Plug In, Qty 8	+5,928

Wire Management Column (sold separately)

Required with any technology selection	
Pattern Number: 02WMC6X6	227
Pattern Number: 02WMC10X10	885

Step 1. Metal Finish for Wire Management Column		6x6	10x10
MC _ _	Powder Coat	+0	+0
PM01	Polished Chrome	+1,065	+458
PM02	Satin Nickel	+1,065	+458
PM03	Oil Rubbed Bronze	+1,595	+2,220

Please consult **page 7** for the palette of DatesWeiser finishes. Natural stone, non-standard glass and veneer, and other technology options are available. Please email **customerservice@datesweiser.com** for a custom quote. Consult technical information on **page 274** for construction details and technical information.

*Tables with a Caesarstone finish require a 4-section top.

Highline Trapezoid Conference Table

72”x192”/ 15 Person
02T72X192

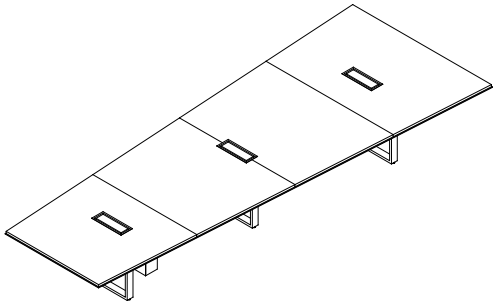

Starting Price: $23,936

72/48x192 table, veneer Tier 1 top with metal edge, open base, powder coat metal finish

Pattern Number: 02T72X192

Step 1. Top Material	
V	Veneer
G	Glass
C	Corian
Q	Caesarstone

Step 2. Edge Selection/Finish		
AU_ _	Spinneybeck Leather: Acqua	+3,617
MC _ _	Powder Coat	+0
PM01	Polished Chrome	+1,564
PM02	Satin Nickel	+725
PM03	Oil Rubbed Bronze	+1,408

Step 3. Base Type		
BL	Base Loop	+0

Step 4. Top Finish		
T1 _ _	Veneer Tier 1	+0
T2 _ _	Veneer Tier 2	+2,208
GC _ _	Clear Glass, back painted	+14,400
GE _ _	Etched matte Glass, back painted	+17,280
CS01	Corian Glacier White	+23,040
QS _ _	Caesarstone	+45,600

Step 5. Base Finish		
MC _ _	Powder Coat	+0
PM01	Polished Chrome	+1,564
PM02	Satin Nickel	+725
PM03	Oil Rubbed Bronze	+1,408

Step 6. Microphone and/or Grommet Accommodations: Optional		
MA _ _	Microphone hole (factory cut)	Qty _ _ x 321 each
GM _ _	2” Grommet Hole (factory cut), liner, lid, in matching metal finish	Qty _ _ x 423 each

Step 7. Power & Connectivity Access: Optional		
TMHW	Tabletop, Metal lid, Hardwired, Qty 3	+11,238
TMPI	Tabletop, Metal lid, Plug In, Qty 3	+9,573
UMHW	Undermount, Hardwired, Qty 8	+8,152
UMPI	Undermount, Plug In, Qty 8	+5,928

Wire Management Column (sold separately)

Required with any technology selection

Pattern Number: 02WMC6X6	227
Pattern Number: 02WMC10X10	885

Step 1. Metal Finish for Wire Management Column		6x6	10x10
MC _ _	Powder Coat	+0	+0
PM01	Polished Chrome	+1,065	+458
PM02	Satin Nickel	+1,065	+458
PM03	Oil Rubbed Bronze	+1,595	+2,220

Please consult **page 7** for the palette of DatesWeiser finishes. Natural stone, non-standard glass and veneer, and other technology options are available. Please email **customerservice@datesweiser.com** for a custom quote. Consult technical information on **page 274** for construction details and technical information.

Highline Trapezoid Conference Table

72”x204”/ 15 Person
02T72X204

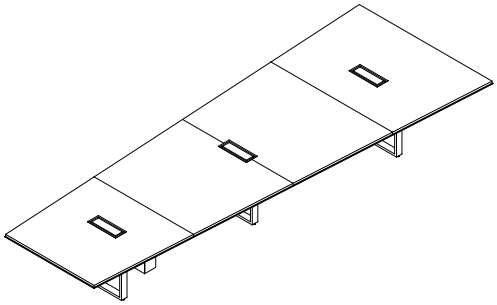

Starting Price: $24,639

72/48x204 table, veneer Tier 1 top with metal edge, open base, powder coat metal finish

Pattern Number: 02T72X204

Step 1. Top Material	
V	Veneer
G	Glass
C	Corian
Q	Caesarstone

Step 2. Edge Selection/Finish		
AU_ _	Spinneybeck Leather: Acqua	+3,789
MC _ _	Powder Coat	+0
PM01	Polished Chrome	+1,564
PM02	Satin Nickel	+717
PM03	Oil Rubbed Bronze	+1,621

Step 3. Base Type		
BL	Base Loop	+0

Step 4. Top Finish		
T1 _ _	Veneer Tier 1	+0
T2 _ _	Veneer Tier 2	+2,346
GC _ _	Clear Glass, back painted	+15,300
GE _ _	Etched matte Glass, back painted	+18,360
CS01	Corian Glacier White	+24,480
QS _ _	Caesarstone	+48,450

Step 5. Base Finish		
MC _ _	Powder Coat	+0
PM01	Polished Chrome	+1,564
PM02	Satin Nickel	+717
PM03	Oil Rubbed Bronze	+1,621

Step 6. Microphone and/or Grommet Accommodations: Optional		
MA _ _	Microphone hole (factory cut)	Qty _ _ x 321 each
GM _ _	2” Grommet Hole (factory cut), liner, lid, in matching metal finish	Qty _ _ x 423 each

Step 7. Power & Connectivity Access: Optional		
TMHW	Tabletop, Metal lid, Hardwired, Qty 3	+11,238
TMPI	Tabletop, Metal lid, Plug In, Qty 3	+9,573
UMHW	Undermount, Hardwired, Qty 8	+8,152
UMPI	Undermount, Plug In, Qty 8	+5,928

Wire Management Column (sold separately)

Required with any technology selection	
Pattern Number: 02WMC6X6	227
Pattern Number: 02WMC10X10	885

Step 1. Metal Finish for Wire Management Column		6x6	10x10
MC _ _	Powder Coat	+0	+0
PM01	Polished Chrome	+1,065	+458
PM02	Satin Nickel	+1,065	+458
PM03	Oil Rubbed Bronze	+1,595	+2,220

Please consult **page 7** for the palette of DatesWeiser finishes. Natural stone, non-standard glass and veneer, and other technology options are available. Please email **customerservice@datesweiser.com** for a custom quote. Consult technical information on **page 274** for construction details and technical information.

Highline Trapezoid Conference Table

72”x216”/ 17 Person
02T72X216

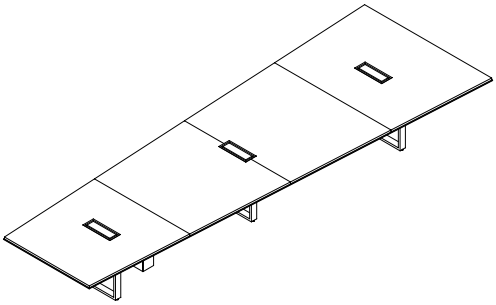

Starting Price: $25,352

72/48x216 table, veneer Tier 1 top with metal edge, open base, powder coat metal finish

Pattern Number: 02T72X216

Step 1. Top Material	
V	Veneer
G	Glass
C	Corian
Q	Caesarstone

Step 2. Edge Selection/Finish		
AU_ _	Spinneybeck Leather: Acqua	+3,961
MC _ _	Powder Coat	+0
PM01	Polished Chrome	+1,564
PM02	Satin Nickel	+717
PM03	Oil Rubbed Bronze	+1,621

Step 3. Base Type		
BL	Base Loop	+0

Step 4. Top Finish		
T1 _ _	Veneer Tier 1	+0
T2 _ _	Veneer Tier 2	+2,484
GC _ _	Clear Glass, back painted	+16,200
GE _ _	Etched matte Glass, back painted	+19,440
CS01	Corian Glacier White	+25,920
QS _ _	Caesarstone	+51,300

Step 5. Base Finish		
MC _ _	Powder Coat	+0
PM01	Polished Chrome	+1,564
PM02	Satin Nickel	+717
PM03	Oil Rubbed Bronze	+1,621

Step 6. Microphone and/or Grommet Accommodations: Optional		
MA _ _	Microphone hole (factory cut)	Qty _ _ x 321 each
GM _ _	2” Grommet Hole (factory cut), liner, lid, in matching metal finish	Qty _ _ x 423 each

Step 7. Power & Connectivity Access: Optional		
TMHW	Tabletop, Metal lid, Hardwired, Qty 3	+11,238
TMPI	Tabletop, Metal lid, Plug In, Qty 3	+9,573
UMHW	Undermount, Hardwired, Qty 8	+8,152
UMPI	Undermount, Plug In, Qty 8	+5,928

Wire Management Column (sold separately)

Required with any technology selection	
Pattern Number: 02WMC6X6	227
Pattern Number: 02WMC10X10	885

Step 1. Metal Finish for Wire Management Column		6x6	10x10
MC _ _	Powder Coat	+0	+0
PM01	Polished Chrome	+1,065	+458
PM02	Satin Nickel	+1,065	+458
PM03	Oil Rubbed Bronze	+1,595	+2,220

Please consult **page 7** for the palette of DatesWeiser finishes. Natural stone, non-standard glass and veneer, and other technology options are available. Please email **customerservice@datesweiser.com** for a custom quote. Consult technical information on **page 274** for construction details and technical information.

Highline Trapezoid Conference Table

72”x228”/ 17 Person
02T72X228

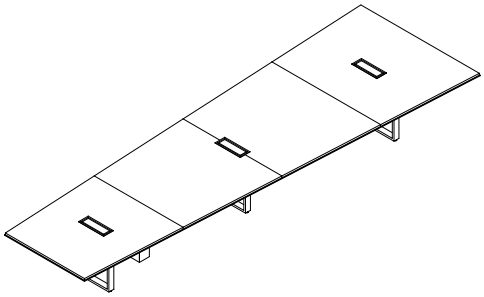

Starting Price: $26,040

72/48x228 table, veneer Tier 1 top with metal edge, open base, powder coat metal finish

Pattern Number: 02T72X228

Step 1. Top Material	
V	Veneer
G	Glass
C	Corian
Q	Caesarstone

Step 2. Edge Selection/Finish		
AU_ _	Spinneybeck Leather: Acqua	+4,133
MC _ _	Powder Coat	+0
PM01	Polished Chrome	+1,564
PM02	Satin Nickel	+717
PM03	Oil Rubbed Bronze	+1,621

Step 3. Base Type		
BL	Base Loop	+0

Step 4. Top Finish		
T1 _ _	Veneer Tier 1	+0
T2 _ _	Veneer Tier 2	+2,622
GC _ _	Clear Glass, back painted	+17,100
GE _ _	Etched matte Glass, back painted	+20,520
CS01	Corian Glacier White	+27,360
QS _ _	Caesarstone*	+54,150

Step 5. Base Finish		
MC _ _	Powder Coat	+0
PM01	Polished Chrome	+1,564
PM02	Satin Nickel	+717
PM03	Oil Rubbed Bronze	+1,621

Step 6. Microphone and/or Grommet Accommodations: Optional		
MA _ _	Microphone hole (factory cut)	Qty _ _ x 321 each
GM _ _	2” Grommet Hole (factory cut), liner, lid, in matching metal finish	Qty _ _ x 423 each

Step 7. Power & Connectivity Access: Optional		
TMHW	Tabletop, Metal lid, Hardwired, Qty 3	+11,238
TMPI	Tabletop, Metal lid, Plug In, Qty 3	9,573
UMHW	Undermount, Hardwired, Qty 8	+8,152
UMPI	Undermount, Plug In, Qty 8	+5,928

Wire Management Column (sold separately)

Required with any technology selection	
Pattern Number: 02WMC6X6	227
Pattern Number: 02WMC10X10	885

Step 1. Metal Finish for Wire Management Column		6x6	10x10
MC _ _	Powder Coat	+0	+0
PM01	Polished Chrome	+1,065	+458
PM02	Satin Nickel	+1,065	+458
PM03	Oil Rubbed Bronze	+1,595	+2,220

Please consult **page 7** for the palette of DatesWeiser finishes. Natural stone, non-standard glass and veneer, and other technology options are available. Please email **customerservice@datesweiser.com** for a custom quote. Consult technical information on **page 274** for construction details and technical information.

*Tables with a Caesarstone finish require a 5-section top.

Highline Trapezoid Conference Table

72”x240”/ 19 Person
02T72X240

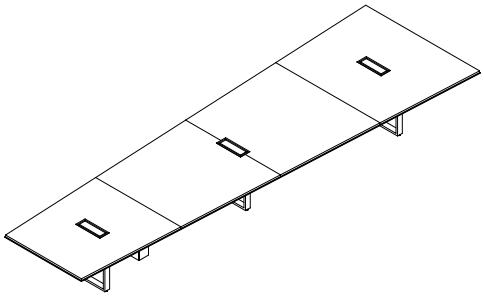

Starting Price: $26,748

72/48x240 table, veneer Tier 1 top with metal edge, open base, powder coat metal finish

Pattern Number: 02T72X240

Step 1. Top Material	
V	Veneer
G	Glass
C	Corian
Q	Caesarstone

Step 2. Edge Selection/Finish		
AU_ _	Spinneybeck Leather: Acqua	+4,304
MC _ _	Powder Coat	+0
PM01	Polished Chrome	+1,564
PM02	Satin Nickel	+717
PM03	Oil Rubbed Bronze	+1,621

Step 3. Base Type		
BL	Base Loop	+0

Step 4. Top Finish		
T1 _ _	Veneer Tier 1	+0
T2 _ _	Veneer Tier 2	+2,760
GC _ _	Clear Glass, back painted	+18,00
GE _ _	Etched matte Glass, back painted	+21,600
CS01	Corian Glacier White	+28,800
QS _ _	Caesarstone*	+57,000

Step 5. Base Finish		
MC _ _	Powder Coat	+0
PM01	Polished Chrome	+1,564
PM02	Satin Nickel	+717
PM03	Oil Rubbed Bronze	+1,621

Step 6. Microphone and/or Grommet Accommodations: Optional		
MA _ _	Microphone hole (factory cut)	Qty _ _ x 321 each
GM _ _	2” Grommet Hole (factory cut), liner, lid, in matching metal finish	Qty _ _ x 423 each

Step 7. Power & Connectivity Access: Optional		
TMHW	Tabletop, Metal lid, Hardwired, Qty 3	+11,238
TMPI	Tabletop, Metal lid, Plug In, Qty 3	+9,573
UMHW	Undermount, Hardwired, Qty 10	+10,190
UMPI	Undermount, Plug In, Qty 10	+7,410

Wire Management Column (sold separately)

Required with any technology selection	
Pattern Number: 02WMC6X6	227
Pattern Number: 02WMC10X10	885

Step 1. Metal Finish for Wire Management Column		6x6	10x10
MC _ _	Powder Coat	+0	+0
PM01	Polished Chrome	+1,065	+458
PM02	Satin Nickel	+1,065	+458
PM03	Oil Rubbed Bronze	+1,595	+2,220

Please consult **page 7** for the palette of DatesWeiser finishes. Natural stone, non-standard glass and veneer, and other technology options are available. Please email **customerservice@datesweiser.com** for a custom quote. Consult technical information on **page 274** for construction details and technical information.

*Tables with a Caesarstone finish require a 5-section top.

Highline Square, Round and Elliptical Meeting Tables Index

42″–84″ width

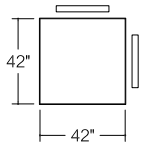

02M42S
4 Person Table

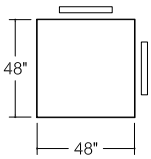

02M48S
4 Person Table

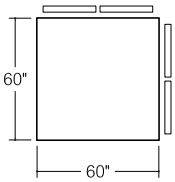

02M60S
8 Person Table

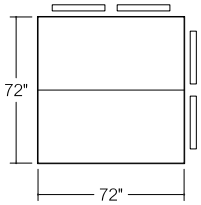

02M72S
8 Person Table

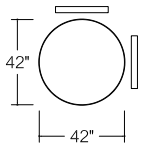

02M42C
4 Person Table

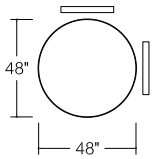

02M48C
4 Person Table

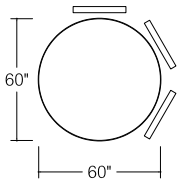

02M60C
6 Person Table

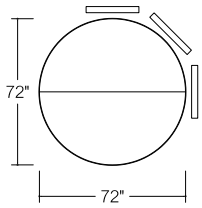

02M72C
8 Person Table

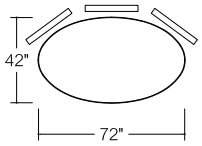

02M42E
6 Person Table

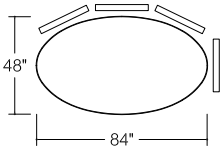

02M48E
8 Person Table

Highline Square Meeting Table

42”x42”/ 4 Person
02M42SOP

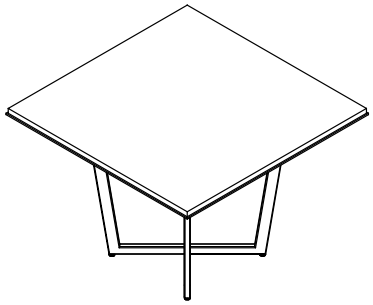

Starting Price: $6,982

42x42 table, veneer Tier 1 top with metal edge, open x base, powder coat metal finish

Pattern Number: 02M42SOP

Please consult **page 7** for the palette of DatesWeiser finishes. Natural stone, non-standard glass and veneer, and other technology options are available. Please email **customerservice@datesweiser.com** for a custom quote. Consult technical information on **page 282** for construction details and technical information.

Step 1. Top Material

V	Veneer
G	Glass
C	Corian
Q	Caesarstone

Step 2. Edge Selection/Finish

AU_ _	Spinneybeck Leather: Acqua	+1,204
MC _ _	Powder Coat	+0
PM01	Polished Chrome	+294
PM02	Satin Nickel	+294
PM03	Oil Rubbed Bronze	+1,794

Step 3. Top Finish

T1 _ _	Veneer Tier 1	+0
T2 _ _	Veneer Tier 2	+282
GC _ _	Clear Glass, back painted	+1,213
GE _ _	Etched matte Glass, back painted	+1,458
CS01	Corian Glacier White	+1,776
QS _ _	Caesarstone	+4,594

Step 4. Microphone and/or Grommet Accommodations: Optional

MA _ _	Microphone hole (factory cut)	Qty _ _ x 321 each
GM _ _	2” Grommet Hole (factory cut), liner, lid, in matching metal finish	Qty _ _ x 423 each

Step 5. Microphone and/or Grommet Accommodations: Optional

MA _ _	Microphone hole (factory cut)	Qty _ _ x 321 each
GM _ _	2” Grommet Hole (factory cut), liner, lid, in matching metal finish	Qty _ _ x 423 each

Highline Square Meeting Table

48”x48”/ 4 Person
02M48SOP

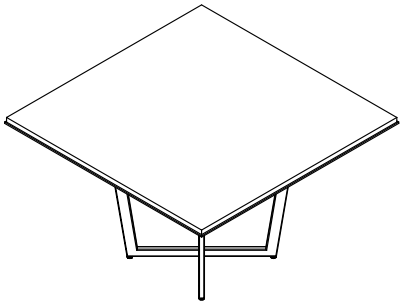

Starting Price: $7,411

48x48 table, veneer Tier 1 top with metal edge, open x base, powder coat metal finish

Pattern Number: 02M48SOP

Please consult **page 7** for the palette of DatesWeiser finishes. Natural stone, non-standard glass and veneer, and other technology options are available. Please email **customerservice@datesweiser.com** for a custom quote. Consult technical information on **page 282** for construction details and technical information.

Step 1. Top Material

V	Veneer
G	Glass
C	Corian
Q	Caesarstone

Step 2. Edge Selection/Finish

AU_ _	Spinneybeck Leather: Acqua	+1,376
MC _ _	Powder Coat	+0
PM01	Polished Chrome	+438
PM02	Satin Nickel	+438
PM03	Oil Rubbed Bronze	+2,088

Step 3. Top Finish

T1 _ _	Veneer Tier 1	+0
T2 _ _	Veneer Tier 2	+368
GC _ _	Clear Glass, back painted	+1,584
GE _ _	Etched matte Glass, back painted	+1,904
CS01	Corian Glacier White	+2,320
QS _ _	Caesarstone	+6,000

Step 4. Power & Connectivity Access: Optional; included wire management base.

TMHW	Tabletop, Metal lid, Hardwired, Qty 1	+9,678
TMPI	Tabletop, Metal lid, Plug In, Qty 1	+9,123
UMHW	Undermount, Hardwired, Qty 2	+9,058
UMPI	Undermount, Plug In, Qty 2	+8,502

Step 5. Microphone and/or Grommet Accommodations: Optional

MA _ _	Microphone hole (factory cut)	Qty _ _ x 321 each
GM _ _	2” Grommet Hole (factory cut), liner, lid, in matching metal finish	Qty _ _ x 423 each

Highline Square Meeting Table

60”x60”/ 8 Person
02M60SOP

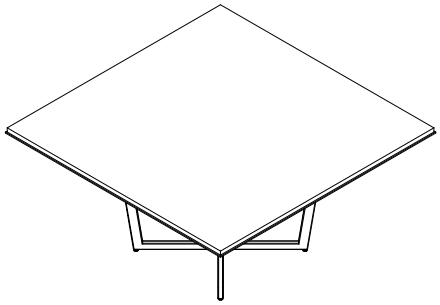

Starting Price: $9,279

60x60 table, veneer Tier 1 top with metal edge, open x base, powder coat metal finish

Pattern Number: 02M60SOP

Please consult **page 7** for the palette of DatesWeiser finishes. Natural stone, non-standard glass and veneer, and other technology options are available. Please email **customerservice@datesweiser.com** for a custom quote. Consult technical information on **page 282** for construction details and technical information.

*Tables with a Caesarstone finish require a 2-section top.

Step 1. Top Material

V	Veneer
G	Glass
C	Corian
Q	Caesarstone

Step 2. Edge Selection/Finish

AU_ _	Spinneybeck Leather: Acqua	+1,720
MC _ _	Powder Coat	+0
PM01	Polished Chrome	+438
PM02	Satin Nickel	+438
PM03	Oil Rubbed Bronze	+2,088

Step 3. Top Finish

T1 _ _	Veneer Tier 1	+0
T2 _ _	Veneer Tier 2	+575
GC _ _	Clear Glass, back painted	+2,475
GE _ _	Etched matte Glass, back painted	+2,975
CS01	Corian Glacier White	+3,625
QS _ _	Caesarstone*	+9,375

Step 4. Power & Connectivity Access: Optional; included wire management base.

TMHW	Tabletop, Metal lid, Hardwired, Qty 1	+9,678
TMPI	Tabletop, Metal lid, Plug In, Qty 1	+9,123
UMHW	Undermount, Hardwired, Qty 2	+9,058
UMPI	Undermount, Plug In, Qty 2	+8,502

Step 5. Microphone and/or Grommet Accommodations: Optional

MA _ _	Microphone hole (factory cut)	Qty _ _ x 321 each
GM _ _	2” Grommet Hole (factory cut), liner, lid, in matching metal finish	Qty _ _ x 423 each

Highline Square Meeting Table

72”x72”/ 8 Person
02M72SOP

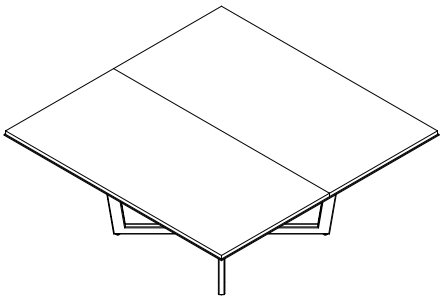

Starting Price: $10,786

72x72 table, veneer Tier 1 top with metal edge, open x base, powder coat metal finish

Pattern Number: 02M72SOP

Please consult **page 7** for the palette of DatesWeiser finishes. Natural stone, non-standard glass and veneer, and other technology options are available. Please email **customerservice@datesweiser.com**for a custom quote. Consult technical information on **page 282** for construction details and technical information.

Step 1. Top Material

V	Veneer
G	Glass
C	Corian
Q	Caesarstone

Step 2. Edge Selection/Finish

AU_ _	Spinneybeck Leather: Acqua	+2,064
MC _ _	Powder Coat	+0
PM01	Polished Chrome	+438
PM02	Satin Nickel	+438
PM03	Oil Rubbed Bronze	+2,088

Step 3. Top Finish

T1 _ _	Veneer Tier 1	+0
T2 _ _	Veneer Tier 2	+828
GC _ _	Clear Glass, back painted	+3,564
GE _ _	Etched matte Glass, back painted	+7,284
CS01	Corian Glacier White	+5,220
QS _ _	Caesarstone	+13,500

Step 4. Power & Connectivity Access: Optional; included wire management base.

TMHW	Tabletop, Metal lid, Hardwired, Qty 1	+10,483
TMPI	Tabletop, Metal lid, Plug In, Qty 1	+10,010
UMHW	Undermount, Hardwired, Qty 4	+11,981
UMPI	Undermount, Plug In, Qty 4	+10,869

Step 5. Microphone and/or Grommet Accommodations: Optional

MA _ _	Microphone hole (factory cut)	Qty _ _ x 321 each
GM _ _	2” Grommet hole (factory cut), liner, lid, in matching metal finish	Qty _ _ x 423 each

Highline Round Meeting Table

42”/ 4 Person
02M42COP

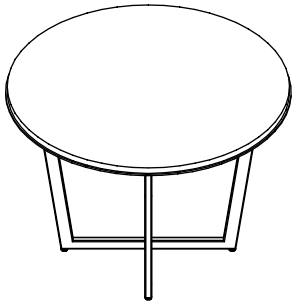

Starting Price: $9,149

42” table, veneer Tier 1 top with metal edge, open x base, powder coat metal finish

Pattern Number: 02M42COP

Please consult **page 7** for the palette of DatesWeiser finishes. Natural stone, non-standard glass and veneer, and other technology options are available. Please email **customerservice@datesweiser.com** for a custom quote. Consult technical information on **page 282** for construction details and technical information.

Step 1. Top Material

V	Veneer
G	Glass
C	Corian
Q	Caesarstone

Step 2. Edge Selection/Finish

AU_ _	Spinneybeck Leather: Acqua	+1,188
MC _ _	Powder Coat	+0
PM01	Polished Chrome	+306
PM02	Satin Nickel	+306
PM03	Oil Rubbed Bronze	+1,874

Step 3. Top Finish

T1 _ _	Veneer Tier 1	+0
T2 _ _	Veneer Tier 2	+282
GC _ _	Clear Glass, back painted	+1,838
GE _ _	Etched matte Glass, back painted	+2,235
CS01	Corian Glacier White	+2,940
QS _ _	Caesarstone	+5,819

Step 4. Microphone and/or Grommet Accommodations: Optional

MA _ _	Microphone hole (factory cut)	Qty _ _ x 321 each
GM _ _	2” Grommet hole (factory cut), liner, lid, in matching metal finish	Qty _ _ x 423 each

Highline Round Meeting Table

48”/ 4 Person
02M48COP

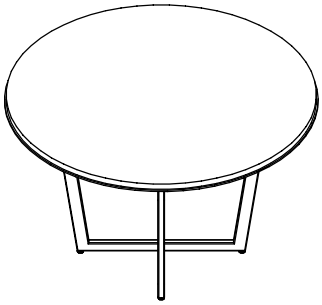

Starting Price: $9,582

48” table, veneer Tier 1 top with metal edge, open x base, powder coat metal finish

Pattern Number: 02M48COP

Please consult **page 7** for the palette of DatesWeiser finishes. Natural stone, non-standard glass and veneer, and other technology options are available. Please email **customerservice@datesweiser.com** for a custom quote. Consult technical information on **page 282** for construction details and technical information.

Step 1. Top Material

V	Veneer
G	Glass
C	Corian
Q	Caesarstone

Step 2. Edge Selection/Finish

AU_ _	Spinneybeck Leather: Acqua	+1,357
MC _ _	Powder Coat	+0
PM01	Polished Chrome	+306
PM02	Satin Nickel	+306
PM03	Oil Rubbed Bronze	+1,874

Step 3. Top Finish

T1 _ _	Veneer Tier 1	+0
T2 _ _	Veneer Tier 2	+368
GC _ _	Clear Glass, back painted	+2,400
GE _ _	Etched matte Glass, back painted	+2,880
CS01	Corian Glacier White	+3,840
QS _ _	Caesarstone	+7,600

Step 4. Power & Connectivity Access: Optional; included wire management base.

TMHW	Tabletop, Metal lid, Hardwired, Qty 1	+9,678
TMPI	Tabletop, Metal lid, Plug In, Qty 1	+9,123
UMHW	Undermount, Hardwired, Qty 2	+9,058
UMPI	Undermount, Plug In, Qty 2	+8,502

Step 5. Microphone and/or Grommet Accommodations: Optional

MA _ _	Microphone hole (factory cut)	Qty_ _ x 321 each
GM_ _	2” Grommet hole (factory cut), liner, lid, in matching metal finish	Qty_ _ x 423 each

Highline Round Meeting Table

60”/ 6 Person
02M60COP

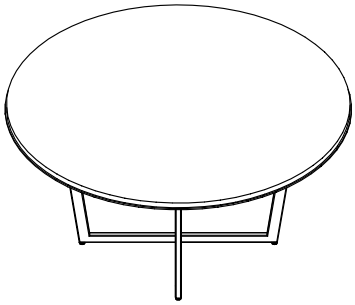

Starting Price: $12,403

60” table, veneer Tier 1 top with metal edge, open x base, powder coat metal finish

Pattern Number: 02M60COP

Please consult **page 7** for the palette of DatesWeiser finishes. Natural stone, non-standard glass and veneer, and other technology options are available. Please email **customerservice@datesweiser.com** for a custom quote. Consult technical information on **page 282** for construction details and technical information.

*Tables with a Caesarstone finish require a 2-section top.

Step 1. Top Material

V	Veneer
G	Glass
C	Corian
Q	Caesarstone

Step 2. Edge Selection/Finish

AU_ _	Spinneybeck Leather: Acqua	+1,696
MC _ _	Powder Coat	+0
PM01	Polished Chrome	+428
PM02	Satin Nickel	+428
PM03	Oil Rubbed Bronze	+1,874

Step 3. Top Finish

T1 _ _	Veneer Tier 1	+0
T2 _ _	Veneer Tier 2	+575
GC _ _	Clear Glass, back painted	+3,750
GE _ _	Etched matte Glass, back painted	+4,500
CS01	Corian Glacier White	+6,000
QS _ _	Caesarstone	+11,875

Step 4. Power & Connectivity Access: Optional; all include wire management base

TMHW	Tabletop, Metal lid, Hardwired, Qty 1	+9,678
TMPI	Tabletop, Metal lid, Plug In, Qty 1	+9,123
UMHW	Undermount, Hardwired, Qty 2	+9,058
UMPI	Undermount, Plug In, Qty 2	+8,502

Step 5. Microphone and/or Grommet Accommodations: Optional

MA _ _	Microphone hole (factory cut)	Qty _ _ x 321 each
GM _ _	2” Grommet hole (factory cut), liner, lid, in matching metal finish	Qty _ _ x 423 each

Highline Round Meeting Table

72”/ 8 Person
02M72COP

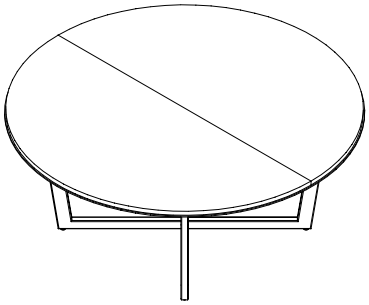

Starting Price: $13,776

72” table, veneer Tier 1 top with metal edge, open x base, powder coat metal finish

Pattern Number: 02M72COP

Please consult **page 7** for the palette of DatesWeiser finishes. Natural stone, non-standard glass and veneer, and other technology options are available. Please email **customerservice@datesweiser.com** for a custom quote. Consult technical information on **page 282** for construction details and technical information.

Step 1. Top Material

V	Veneer
G	Glass
C	Corian
Q	Caesarstone

Step 2. Edge Selection/Finish

AU_ _	Spinneybeck Leather: Acqua	+2,036
MC _ _	Powder Coat	+0
PM01	Polished Chrome	+428
PM02	Satin Nickel	+428
PM03	Oil Rubbed Bronze	+1,874

Step 3. Top Finish

T1 _ _	Veneer Tier 1	+0
T2 _ _	Veneer Tier 2	+818
GC _ _	Clear Glass, back painted, color	+5,400
GE _ _	Etched matte Glass, back painted, color	+6,480
CS01	Corian Glacier White	+8,640
QS _ _	Caesarstone	+17,100

Step 4. Power & Connectivity Access: Optional; all include wire management base

TMHW	Tabletop, Metal lid, Hardwired, Qty 1	+10,483
TMPI	Tabletop, Metal lid, Plug In, Qty 1	+10,010
UMHW	Undermount, Hardwired, Qty 4	+11,981
UMPI	Undermount, Plug In, Qty 4	+10,869

Step 5. Microphone and/or Grommet Accommodations: Optional

MA _ _	Microphone hole (factory cut)	Qty _ _ x 321 each
GM _ _	2” Grommet hole (factory cut), liner, lid, in matching metal finish	Qty _ _ x 423 each

Highline Elliptical Meeting Table

42”x72”/ 6 Person
02M42EOP

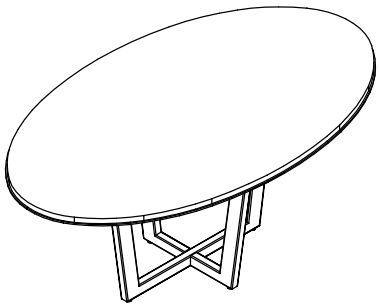

Starting Price: $12,981

42x72 table, veneer Tier 1 top with metal edge, open x base, powder coat metal finish

Pattern Number: 02M42EOP

Please consult **page 7** for the palette of DatesWeiser finishes. Natural stone, non-standard glass and veneer, and other technology options are available. Please email **customerservice@datesweiser.com** for a custom quote. Consult technical information on **page 282** for construction details and technical information.

Step 1. Top Material

V	Veneer
G	Glass
C	Corian
Q	Caesarstone

Step 2. Edge Selection/Finish

AU_ _	Spinneybeck Leather: Acqua	+1,653
MC _ _	Powder Coat	+0
PM01	Polished Chrome	+525
PM02	Satin Nickel	+525
PM03	Oil Rubbed Bronze	+2,505

Step 3. Top Finish

T1 _ _	Veneer Tier 1	+0
T2 _ _	Veneer Tier 2	+483
GC _ _	Clear Glass, back painted	+3,150
GE _ _	Etched matte Glass, back painted	+3,780
CS01	Corian Glacier White	+5,040
QS _ _	Caesarstone	+9,975

Step 4. Microphone and/or Grommet Accommodations: Optional

MA _ _	Microphone hole (factory cut)	Qty _ _ x 321 each
GM _ _	2” Grommet hole (factory cut), liner, lid, in matching metal finish	Qty _ _ x 423 each

Highline Elliptical Meeting Table

48”x84”/ 8 Person
02M48EOP

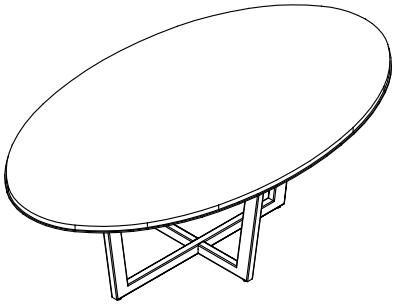

Starting Price: $14,002

48x84 table, veneer Tier 1 top with metal edge, open x base, powder coat metal finish

Pattern Number: 02M48EOP

Please consult **page 7** for the palette of DatesWeiser finishes. Natural stone, non-standard glass and veneer, and other technology options are available. Please email **customerservice@datesweiser.com** for a custom quote. Consult technical information on **page 282** for construction details and technical information.

Step 1. Top Material

V	Veneer
G	Glass
C	Corian
Q	Caesarstone

Step 2. Edge Selection/Finish

AU_ _	Spinneybeck Leather: Acqua	+1,915
MC _ _	Powder Coat	+0
PM01	Polished Chrome	+525
PM02	Satin Nickel	+525
PM03	Oil Rubbed Bronze	+2,505

Step 3. Top Finish

T1 _ _	Veneer Tier 1	+0
T2 _ _	Veneer Tier 2	+644
GC _ _	Clear Glass, back painted	+4,200
GE _ _	Etched matte Glass, back painted	+5,040
CS01	Corian Glacier White	+6,720
QS _ _	Caesarstone	+13,300

Step 4. Power & Connectivity Access: Optional; all include wire management base

TMHW	Tabletop, Metal lid, Hardwired, Qty 1	+9,678
TMPI	Tabletop, Metal lid, Plug In, Qty 1	+9,123
UMHW	Undermount, Hardwired, Qty 4	+9,058
UMPI	Undermount, Plug In, Qty 4	+8,502

Step 5. Microphone and/or Grommet Accommodations: Optional

MA _ _	Microphone hole (factory cut)	Qty _ _ x 321 each
GM _ _	2” Grommet hole (factory cut), liner, lid, in matching metal finish	Qty _ _ x 423 each

Highline Credenzas Index

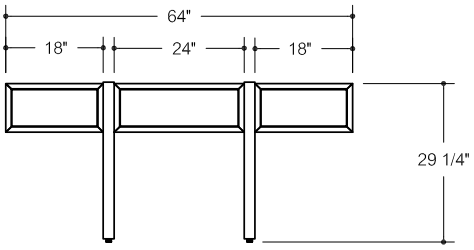

02C1H64

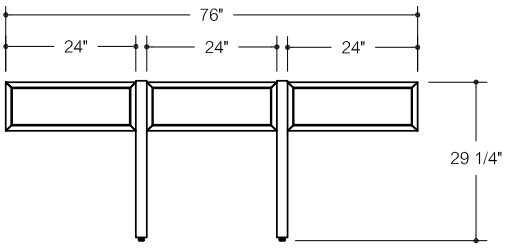

02C1H76

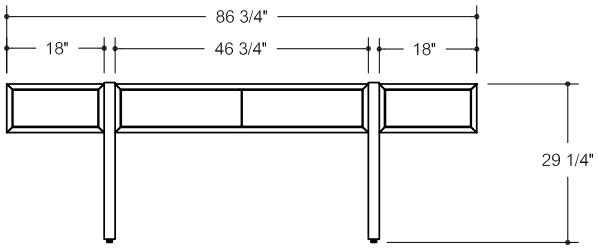

02C1H87

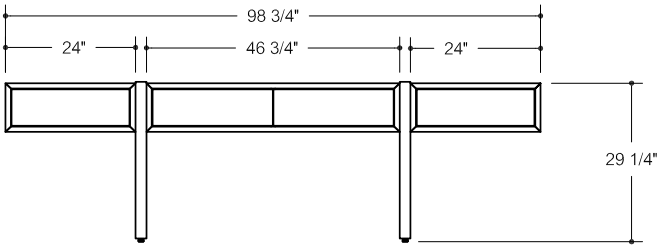

02C1H99

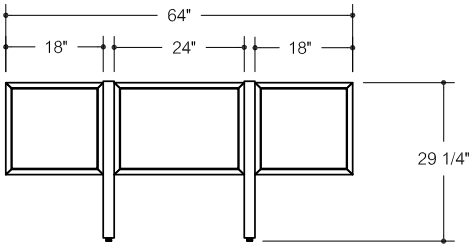

02C2H64

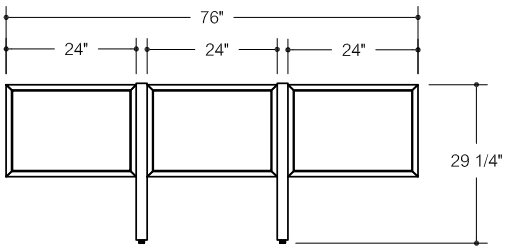

02C2H76

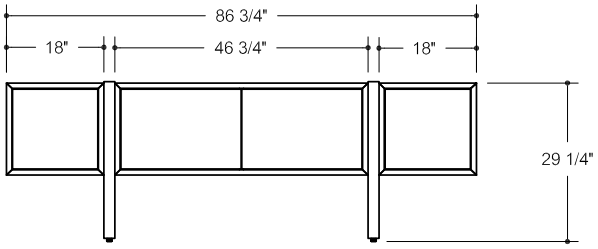

02C2H87

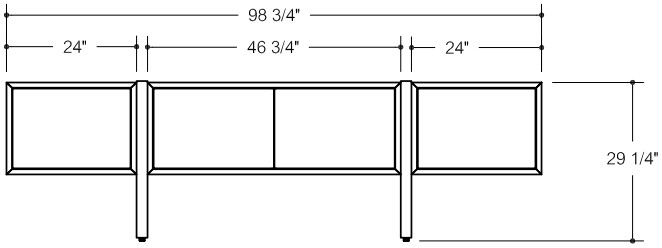

02C2H99

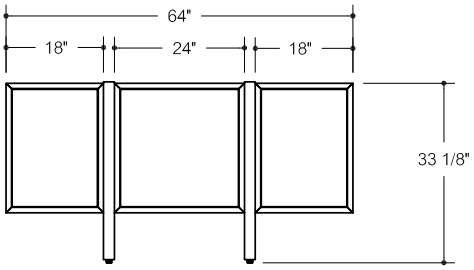

02C3H64

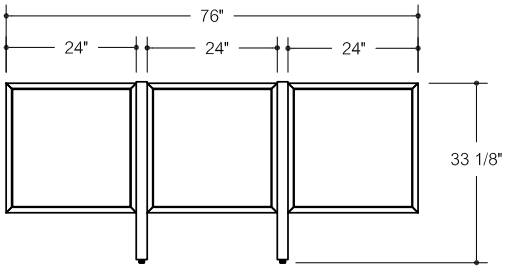

02C3H76

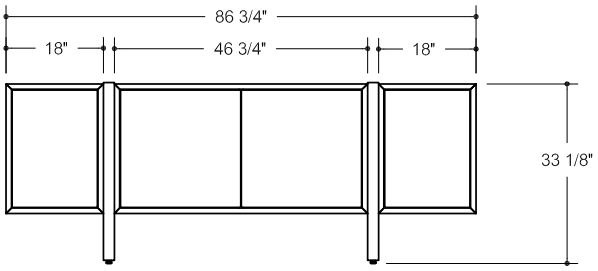

02C3H87

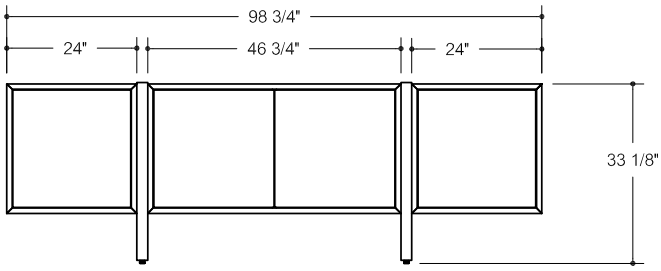

02C3H99

1H Highline Credenza

64” Long
02C1H64

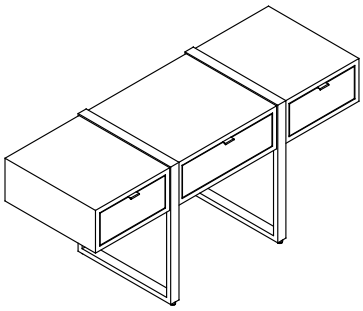

Starting Price: $7,993

64” 1 High credenza, all open, satin lacquer, powder coat legs

Pattern Number: 02C1H64

Step 1. Top Material

NT	No Top
FG	Full Glass
SG	3 Section
CG	Center Section only

Step 2. Top Finish

		SECTION TOP	CENTER TOP	FULL TOP
GC00	Clear Glass	N/A	N/A	+886
GC _ _	Clear Glass back painted	+1053	+409	N/A
GE _ _	Etched Glass back painted	+1,448	+590	N/A
CS01	Corian Glacier white	+1,827	+745	N/A
QS _ _	Caesarstone	+3,653	+1,489	N/A

Step 3. Case Finish

SL _ _	Satin Lacquer	+0
T1	Veneer Tier 1	+1,043
T2	Veneer Tier 2	+2,038
HG _ _	High Gloss Polyester	+3,414

Step 4. Leg Finish

MC _ _	Powder Coat	+0
PM01	Polished Chrome	+342
PM02	Satin Nickel	+342
PM03	Oil Rubbed Bronze	+638

Step 5. Door/Drawer Face Finish

SL _ _	Satin Lacquer	+0
T1 _ _	Veneer Tier 1	+348
T2 _ _	Veneer Tier 2	+679
HG _ _	High Gloss Polyester	+1,138

Step 6. Configuration (3 positions – Left/Center/Right)

Specify Left to Right: Select case configurations for 3 available positions.

1 _ _ 18	Left
1 _ _ 24	Center
1 _ _ 18	Right

LEFT

1OP18	Open	+0
1DW18	Drawer	+519

CENTER

1OP24	Open	+0
1DW24	Drawers	+519

RIGHT

1OP18	Open	+ 0
1DW18	Drawer	+519

Please consult **page 7** for the palette of DatesWeiser finishes. Natural stone, non-standard glass and veneer, and other technology options are available. Please email **customerservice@datesweiser.com** for a custom quote. Consult technical information on **page 289** for construction details and technical information.

1H Highline Credenza

76” Long
02C1H76

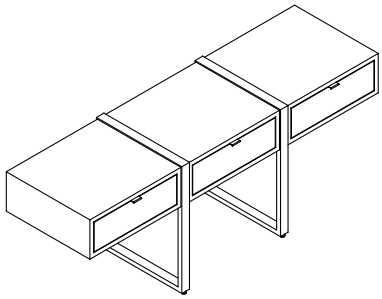

Starting Price: $8,518

76” 1 High credenza, all open, satin lacquer, powder coat legs

Pattern Number: 02C1H76

Step 1. Top Material

NT	No Top
FG	Full Glass
SG	3 Section
CG	Center Section only

Step 2. Top Finish

		SECTION TOP	CENTER TOP	FULL TOP
GC00	Clear Glass	N/A	N/A	+1,054
GC _ _	Clear Glass back painted	+1,227	+409	N/A
GE _ _	Etched Glass back painted	+1,770	+590	N/A
CS01	Corian Glacier white	+2,235	+745	N/A
QS _ _	Caesarstone	+4,467	+1,489	N/A

Step 3. Case Finish

SL _ _	Satin Lacquer	+0
T1	Veneer Tier 1	+1,188
T2	Veneer Tier 2	+2,323
HG _ _	High Gloss Polyester	+3,912

Step 4. Leg Finish

MC _ _	Powder Coat	+0
PM01	Polished Chrome	+342
PM02	Satin Nickel	+342
PM03	Oil Rubbed Bronze	+638

Step 5. Door/Drawer Face Finish

SL _ _	Satin Lacquer	+0
T1 _ _	Veneer Tier 1	+396
T2 _ _	Veneer Tier 2	+775
HG _ _	High Gloss Polyester	+1,304

Step 6. Configuration (3 positions – Left/Center/Right)

Specify Left to Right: Select case configurations for 3 available positions

1 _ _ 24	Left
1 _ _ 24	Center
1 _ _ 24	Right

LEFT

1OP24	Open	+0
1DW24	Drawers	+ 519

CENTER

1OP24	Open	+0
1DW24	Drawers	+ 519

RIGHT

1OP24	Open	+0
1DW24	Drawers	+ 519

Please consult **page 7** for the palette of DatesWeiser finishes. Natural stone, non-standard glass and veneer, and other technology options are available. Please email **customerservice@datesweiser.com** for a custom quote. Consult technical information on **page 289** for construction details and technical information.

1H Highline Credenza

87” Long
02C1H87

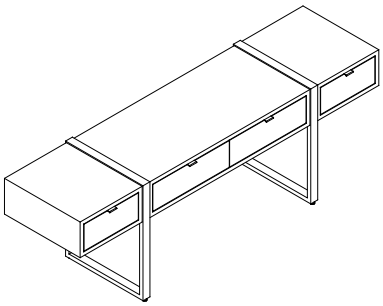

Starting Price: $9,481

87” 1 High credenza, all open, satin lacquer, powder coat legs

Pattern Number: 02C1H87

Step 1. Top Material

NT	No Top
FG	Full Glass
SG	3 Section
CG	Center Section only

Step 2. Top Finish

		SECTION TOP	CENTER TOP	FULL TOP
GC00	Clear Glass	N/A	N/A	+1,202
GC _ _	Clear Glass back painted	+1,587	+943	N/A
GE _ _	Etched Glass back painted	+2,091	+1,233	N/A
CS01	Corian Glacier white	+2,793	+1,711	N/A
QS _ _	Caesarstone	+5,586	+3,422	N/A

Step 3. Case Finish

SL _ _	Satin Lacquer	+0
T1	Veneer Tier 1	+1,320
T2	Veneer Tier 2	+2,588
HG _ _	High Gloss Polyester	+4,358

Step 4. Leg Finish

MC _ _	Powder Coat	+0
PM01	Polished Chrome	+342
PM02	Satin Nickel	+342
PM03	Oil Rubbed Bronze	+638

Step 5. Door/Drawer Face Finish

SL _ _	Satin Lacquer	+0
T1 _ _	Veneer Tier 1	+440
T2 _ _	Veneer Tier 2	+862
HG _ _	High Gloss Polyester	+1,453

Step 6. Configuration (3 positions – Left/Center/Right)

Specify Left to Right: Select case configurations for 3 available positions

1 _ _ 18	Left
1 _ _ 46	Center
1 _ _ 18	Right

LEFT

1OP18	Open	+ 0
1DW18	Drawers	+ 519

CENTER

1OP18	Open	+ 0
1DW46	Drawers	+1,050

RIGHT

1OP18	Open	+ 0
1DW18	Drawers	+ 519

Please consult **page 7** for the palette of DatesWeiser finishes. Natural stone, non-standard glass and veneer, and other technology options are available. Please email **customerservice@datesweiser.com** for a custom quote. Consult technical information on **page 289** for construction details and technical information.

1H Highline Credenza

99” Long
02C1H99

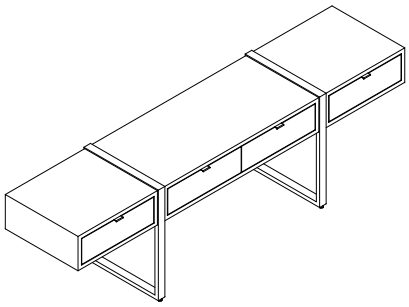

Starting Price: $10,252

99” 1 High credenza, all open, satin lacquer, powder coat legs

Pattern Number: 02C1H99

Step 1. Top Material

NT	No Top
FG	Full Glass
SG	3 Section
CG	Center Section only

Step 2. Top Finish

		SECTION TOP	CENTER TOP	FULL TOP
GC00	Clear Glass	N/A	N/A	+1,370
GC _ _	Clear Glass back painted	+1,761	+943	N/A
GE _ _	Etched Glass back painted	+2,413	+1,233	N/A
CS01	Corian Glacier white	+3,201	+1,711	N/A
QS _ _	Caesarstone	+6,400	+3,422	N/A

Step 3. Case Finish

SL _ _	Satin Lacquer	+0
T1	Veneer Tier 1	+1,461
T2	Veneer Tier 2	+2,873
HG _ _	High Gloss Polyester	+4,849

Step 4. Leg Finish

MC _ _	Powder Coat	+0
PM01	Polished Chrome	+342
PM02	Satin Nickel	+342
PM03	Oil Rubbed Bronze	+638

Step 5. Door/Drawer Face Finish

SL _ _	Satin Lacquer	+0
T1 _ _	Veneer Tier 1	+487
T2 _ _	Veneer Tier 2	+958
HG _ _	High Gloss Polyester	+1,620

Step 6. Configuration (3 positions – Left/Center/Right)

Specify Left to Right: Select case configurations for 3 available positions

1 _ _ 24	Left
1 _ _ 46	Center
1 _ _ 24	Right

LEFT

1OP24	Open	+ 0
1DW24	Drawer	+ 519

CENTER

1OP46	Open	+0
1DW46	Drawers	+1050

RIGHT

1OP24	Open	+ 0
1DW24	Drawer	+ 519

Please consult **page 7** for the palette of DatesWeiser finishes. Natural stone, non-standard glass and veneer, and other technology options are available. Please email **customerservice@datesweiser.com** for a custom quote. Consult technical information on **page 289** for construction details and technical information.

2H Highline Credenza

64” Long
02C2H64

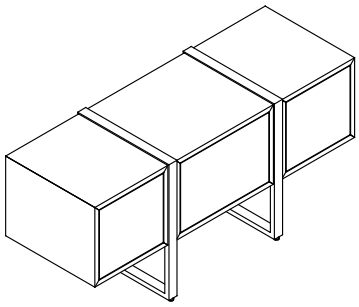

Starting Price: $10,069

64” 2 High credenza, all doors, satin lacquer, powder coat legs

Pattern Number: 02C2H64

Step 1. Top Material

NT	No Top
FG	Full Glass
SG	3 Section
CG	Center Section only

Step 2. Top Finish

		SECTION TOP	CENTER TOP	FULL TOP
GC00	Clear Glass	N/A	N/A	+886
GC _ _	Clear Glass back painted	+1,053	+409	N/A
GE _ _	Etched Glass back painted	+1,448	+590	N/A
CS01	Corian Glacier white	+1,827	+745	N/A
QS _ _	Caesarstone	+3,653	+1,489	N/A

Step 3. Case Finish

SL _ _	Satin Lacquer	+0
T1	Veneer Tier 1	+1,513
T2	Veneer Tier 2	+3,338
HG _ _	High Gloss Polyester	+6,276

Step 4. Leg Finish

MC _ _	Powder Coat	+0
PM01	Polished Chrome	+342
PM02	Satin Nickel	+342
PM03	Oil Rubbed Bronze	+638

Step 5. Door/Drawer Face Finish

SL _ _	Satin Lacquer	+0
T1 _ _	Veneer Tier 1	+504
T2 _ _	Veneer Tier 2	+1,113
HG _ _	High Gloss Polyester	+2,092

Step 6. Configuration (3 positions – Left/Center/Right)

Specify Left to Right: Select case configurations for 3 available positions

2 _ _ 18	Left
2 _ _ 24	Center
2 _ _ 18	Right

LEFT

2DR18	Door	+ 0
2DW18	Drawers	+ 397
2OW18	Open over Drawer	+ 314
2TT18	Trash thru Top	+ 728

CENTER

2DR24	Door	+0
2DW24	Drawers	+625
2OW24	Open over Drawer	+459

RIGHT

2DR18	Door	+ 0
2DW18	Drawers	+ 397
2OW18	Open over Drawer	+ 314
2TT18	Trash thru Top	+ 728

Please consult **page 7** for the palette of DatesWeiser finishes. Natural stone, non-standard glass and veneer, and other technology options are available. Please email **customerservice@datesweiser.com** for a custom quote. Consult technical information on **page 289** for construction details and technical information.

2H Highline Credenza

76” Long
02C2H76

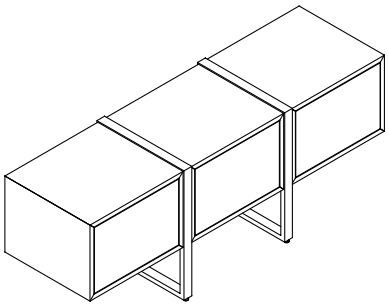

Starting Price: $10,675

76” 2 High credenza, all doors, satin lacquer, powder coat legs

Pattern Number: 02C2H76

Step 1. Top Material

NT	No Top
FG	Full Glass
SG	3 Section
CG	Center Section only

Step 2. Top Finish

		SECTION TOP	CENTER TOP	FULL TOP
GC00	Clear Glass	N/A	N/A	+1,054
GC _ _	Clear Glass back painted	+1,227	+409	N/A
GE _ _	Etched Glass back painted	+1,770	+590	N/A
CS01	Corian Glacier white	+2,235	+745	N/A
QS _ _	Caesarstone	+4,467	+1,489	N/A

Step 3. Case Finish

SL _ _	Satin Lacquer	+0
T1	Veneer Tier 1	+1,662
T2	Veneer Tier 2	+3,687
HG _ _	High Gloss Polyester	+7,014

Step 4. Leg Finish

MC _ _	Powder Coat	+0
PM01	Polished Chrome	+342
PM02	Satin Nickel	+342
PM03	Oil Rubbed Bronze	+638

Step 5. Door/Drawer Face Finish

SL _ _	Satin Lacquer	+0
T1 _ _	Veneer Tier 1	+554
T2 _ _	Veneer Tier 2	+1,229
HG _ _	High Gloss Polyester	+2,338

Step 6. Configuration (3 positions – Left/Center/Right)

Specify Left to Right: Select case configurations for 3 available positions

2 _ _ 24	Left
2 _ _ 24	Center
2 _ _ 24	Right

LEFT

2DR24	Door	+ 0
2DW24	Drawers	+ 625
2OW24	Open over Drawer	+ 459
2TT24	Trash thru Top	+721

CENTER

2DR24	Door	+ 0
2DW24	Drawers	+ 625
2OW24	Open over Drawer	+ 459

RIGHT

2DR24	Door	+ 0
2DW24	Drawers	+ 625
2OW24	Open over Drawer	+ 459
2TT24	Trash thru Top	+721

Please consult **page 7** for the palette of DatesWeiser finishes. Natural stone, non-standard glass and veneer, and other technology options are available. Please email **customerservice@datesweiser.com** for a custom quote. Consult technical information on **page 289** for construction details and technical information.

2H Highline Credenza

87” Long
02C2H87

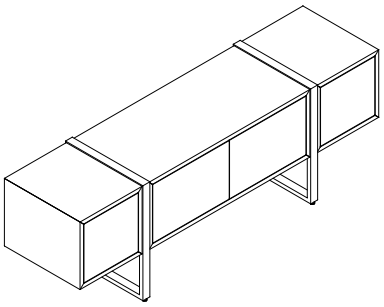

Starting Price: $12,033

87” 2 High credenza, all doors, satin lacquer, powder coat legs

Pattern Number: 02C2H87

Step 1. Top Material

NT	No Top
FG	Full Glass
SG	3 Section
CG	Center Section only

Step 2. Top Finish

		SECTION TOP	CENTER TOP	FULL TOP
GC00	Clear Glass	N/A	N/A	+1,202
GC _ _	Clear Glass back painted	+1,587	+943	N/A
GE _ _	Etched Glass back painted	+2,091	+1,233	N/A
CS01	Corian Glacier white	+2,793	+1,711	N/A
QS _ _	Caesarstone	+5,586	+3,422	N/A

Step 3. Case Finish

SL _ _	Satin Lacquer	+0
T1	Veneer Tier 1	+1,854
T2	Veneer Tier 2	+4,081
HG _ _	High Gloss Polyester	+7,680

Step 4. Leg Finish

MC _ _	Powder Coat	+0
PM01	Polished Chrome	+342
PM02	Satin Nickel	+342
PM03	Oil Rubbed Bronze	+638

Step 5. Door/Drawer Face Finish

SL _ _	Satin Lacquer	+0
T1 _ _	Veneer Tier 1	+618
T2 _ _	Veneer Tier 2	+1,360
HG _ _	High Gloss Polyester	+2,561

Step 6. Configuration (3 positions – Left/Center/Right)

Specify Left to Right: Select case configurations for 3 available positions

2 _ _ 18	Left
2 _ _ 46	Center
2 _ _ 18	Right

LEFT

2DR18	Door	+ 0
2DW18	Drawers	+ 397
2OW18	Open over Drawer	+ 314
2TT18	Trash thru Top	+728

CENTER

2DR46	Doors	+0
2DW46	Drawers	+978
2OW46	Open over Drawers	+640

RIGHT

2DR18	Door	+ 0
2DW18	Drawers	+ 397
2OW18	Open over Drawer	+ 314
2TT18	Trash thru Top	+728

Please consult **page 7** for the palette of DatesWeiser finishes. Natural stone, non-standard glass and veneer, and other technology options are available. Please email **customerservice@datesweiser.com** for a custom quote. Consult technical information on **page 289** for construction details and technical information.

2H Highline Credenza

99” Long
02C2H99

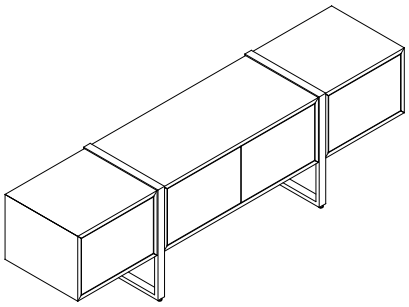

Starting Price: $12,779

99” 2 High credenza, all doors, satin lacquer, powder coat legs

Pattern Number: 02C2H99

Step 1. Top Material

NT	No Top
FG	Full Glass
SG	3 Section
CG	Center Section only

Step 2. Top Finish

		SECTION TOP	CENTER TOP	FULL TOP
GC00	Clear Glass	N/A	N/A	+1,370
GC _ _	Clear Glass back painted	+1,761	+943	N/A
GE _ _	Etched Glass back painted	+2,413	+1,233	N/A
CS01	Corian Glacier white	+3,201	+1,711	N/A
QS _ _	Caesarstone	+6,400	+3,422	N/A

Step 3. Case Finish

SL _ _	Satin Lacquer	+0
T1	Veneer Tier 1	+2,043
T2	Veneer Tier 2	+4,474
HG _ _	High Gloss Polyester	+8,419

Step 4. Leg Finish

MC _ _	Powder Coat	+0
PM01	Polished Chrome	+342
PM02	Satin Nickel	+342
PM03	Oil Rubbed Bronze	+638

Step 5. Door/Drawer Face Finish

SL _ _	Satin Lacquer	+0
T1 _ _	Veneer Tier 1	+681
T2 _ _	Veneer Tier 2	+1,492
HG _ _	High Gloss Polyester	+2,807

Step 6. Configuration (3 positions – Left/Center/Right)

Specify Left to Right: Select case configurations for 3 available positions

2 _ _ 24	Left
2 _ _ 46	Center
2 _ _ 24	Right

LEFT

2DR24	Door	+ 0
2DW24	Drawers	+ 625
2OW24	Open over Drawer	+459
2TT24	Trash thru Top	+721

CENTER

2DR46	Doors	+0
2DW46	Drawers	+978
2OW46	Open over Drawers	+640

RIGHT

2DR24	Door	+ 0
2DW24	Drawers	+ 625
2OW24	Open over Drawer	+459
2TT24	Trash thru Top	+721

Please consult **page 7** for the palette of DatesWeiser finishes. Natural stone, non-standard glass and veneer, and other technology options are available. Please email **customerservice@datesweiser.com** for a custom quote. Consult technical information on **page 289** for construction details and technical information.

3H Highline Credenza

64” Long
02C3H64

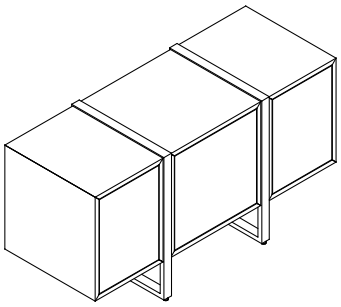

Starting Price: $11,046

64” 3 High credenza, all doors, satin lacquer, powder coat legs

Pattern Number: 02C3H64

Step 1. Top Material

NT	No Top
FG	Full Glass
SG	3 Section
CG	Center Section only

Step 2. Top Finish

		SECTION TOP	CENTER TOP	FULL TOP
GC00	Clear Glass	N/A	N/A	+886
GC _ _	Clear Glass back painted	+1,053	+409	N/A
GE _ _	Etched Glass back painted	+1,448	+590	N/A
CS01	Corian Glacier white	+1,827	+745	N/A
QS _ _	Caesarstone	+3,653	+1,489	N/A

Step 3. Case Finish

SL _ _	Satin Lacquer	+0
T1	Veneer Tier 1	+1,882
T2	Veneer Tier 2	+4,358
HG _ _	High Gloss Polyester	+8,550

Step 4. Leg Finish

MC _ _	Powder Coat	+0
PM01	Polished Chrome	+342
PM02	Satin Nickel	+342
PM03	Oil Rubbed Bronze	+638

Step 5. Door/Drawer Face Finish

SL _ _	Satin Lacquer	+0
T1 _ _	Veneer Tier 1	+627
T2 _ _	Veneer Tier 2	+1,453
HG _ _	High Gloss Polyester	+2,850

Step 6. Configuration (3 positions – Left/Center/Right)

Specify Left to Right: Select case configurations for 3 available positions

3 _ _ 18	Left
3 _ _ 24	Center
3 _ _ 18	Right

LEFT

3DR18	Door	+ 0
3DW18	Drawers	+ 850
3OW18	Open over Drawer	+ 677
3OR18	Open over Door	+ 579
3TT18	Trash thru Top	+731
3TP18	Trash Pull-Out	+1,271
3AV18	AV Case	+406

CENTER

3DR24	Door	+0
3DW24	Drawers	+1,121
3OW24	Open over Drawer	+611
3OR24	Open over Door	+585
3TT24	Trash thru Top	+719
3TP24	Trash Pull-Out	+1,256
3AV24	AV Case	+395

RIGHT

3DR18	Door	+ 0
3DW18	Drawers	+ 850
3OW18	Open over Drawer	+ 677
3OR18	Open over Door	+ 579
3TT18	Trash thru Top	+731
3TP18	Trash Pull-Out	+1,271
3AV18	AV Case	+406

Please consult **page 7** for the palette of DatesWeiser finishes. Natural stone, non-standard glass and veneer, and other technology options are available. Please email **customerservice@datesweiser.com** for a custom quote. Consult technical information on **page 289** for construction details and technical information.

3H Highline Credenza

76” Long
02C3H76

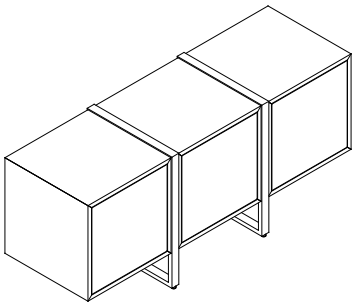

Starting Price: $12,226

76” 3 High credenza, all doors, satin lacquer, powder coat legs

Pattern Number: 02C3H76

Step 1. Top Material

NT	No Top
FG	Full Glass
SG	3 Section
CG	Center Section only

Step 2. Top Finish

		SECTION TOP	CENTER TOP	FULL TOP
GC00	Clear Glass	N/A	N/A	+1,054
GC _ _	Clear Glass back painted	+1,227	+409	N/A
GE _ _	Etched Glass back painted	+1,770	+590	N/A
CS01	Corian Glacier white	+2,235	+745	N/A
QS _ _	Caesarstone	+4,467	+1,489	N/A

Step 3. Case Finish

SL _ _	Satin Lacquer	+0
T1	Veneer Tier 1	+2,043
T2	Veneer Tier 2	+4,771
HG _ _	High Gloss Polyester	+9,353

Step 4. Leg Finish

MC _ _	Powder Coat	+0
PM01	Polished Chrome	+342
PM02	Satin Nickel	+342
PM03	Oil Rubbed Bronze	+638

Step 5. Door/Drawer Face Finish

SL _ _	Satin Lacquer	+0
T1 _ _	Veneer Tier 1	+681
T2 _ _	Veneer Tier 2	+1,590
HG _ _	High Gloss Polyester	+3,118

Step 6. Configuration (3 positions – Left/Center/Right)

Specify Left to Right: Select case configurations for 3 available positions

3 _ _ **24**	Left
3 _ _ **24**	Center
3 _ _ **24**	Right

LEFT

3DR24	Door	+ 0
3DW24	Drawers	+ 1,121
3OW24	Open over Drawer	+ 611
3OR24	Open over Door	+ 585
3TT24	Trash thru Top	+719
3TP24	Trash Pull-Out	+1,256
3AV24	AV Case	+395

CENTER

3DR24	Door	+ 0
3DW24	Drawers	+ 1,121
3OW24	Open over Drawer	+ 611
3OR24	Open over Door	+ 585
3TT24	Trash thru Top	+719
3TP24	Trash Pull-Out	+1,256
3AV24	AV Case	+395

RIGHT

3DR24	Door	+ 0
3DW24	Drawers	+ 1,121
3OW24	Open over Drawer	+ 611
3OR24	Open over Door	+ 585
3TT24	Trash thru Top	+719
3TP24	Trash Pull-Out	+1,256
3AV24	AV Case	+395

Please consult **page 7** for the palette of DatesWeiser finishes. Natural stone, non-standard glass and veneer, and other technology options are available. Please email **customerservice@datesweiser.com** for a custom quote. Consult technical information on **page 289**for construction details and technical information.

3H Highline Credenza

87” Long
02C3H87

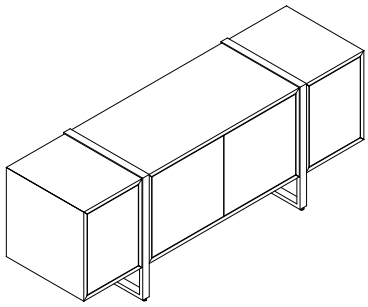

Starting Price: $13,102

87” 3 High credenza, all doors, satin lacquer, powder coat legs

Pattern Number: 02C3H87

Step 1. Top Material

NT	No Top
FG	Full Glass
SG	3 Section
CG	Center Section only

Step 2. Top Finish

		SECTION TOP	CENTER TOP	FULL TOP
GC00	Clear Glass	N/A	N/A	+1,202
GC _ _	Clear Glass back painted	+1,587	+943	N/A
GE _ _	Etched Glass back painted	+2,091	+1,233	N/A
CS01	Corian Glacier white	+2,793	+1,711	N/A
QS _ _	Caesarstone	+5,586	+3,422	N/A

Step 3. Case Finish

SL _ _	Satin Lacquer	+0
T1	Veneer Tier 1	+2,327
T2	Veneer Tier 2	+5,285
HG _ _	High Gloss Polyester	+10,284

Step 4. Leg Finish

MC _ _	Powder Coat	+0
PM01	Polished Chrome	+342
PM02	Satin Nickel	+342
PM03	Oil Rubbed Bronze	+638

Step 5. Door/Drawer Face Finish

SL _ _	Satin Lacquer	+0
T1 _ _	Veneer Tier 1	+776
T2 _ _	Veneer Tier 2	+1,761
HG _ _	High Gloss Polyester	+3,428

Step 6. Configuration (3 positions – Left/Center/Right)

Specify Left to Right: Select case configurations for 3 available positions

3 _ _ 18	Left
3 _ _ 46	Center
3 _ _ 18	Right

LEFT

3DR18	Door	+ 0
3DW18	Drawers	+ 850
3OW18	Open over Drawer	+ 677
3OR18	Open over Door	+ 579
3TT18	Trash thru Top	+731
3TP18	Trash Pull-Out	+1,271
3AV18	AV Case	+406

CENTER

3DR46	Doors	+0
3DW46	Drawers	+1,398
3OW46	Open over Drawers	+1,079
3OR46	Open over Doors	+325
3AV46	AV Case	+56

RIGHT

3DR18	Door	+ 0
3DW18	Drawers	+ 850
3OW18	Open over Drawer	+ 677
3OR18	Open over Door	+ 579
3TT18	Trash thru Top	+731
3TP18	Trash Pull-Out	+1,271
3AV18	AV Case	+406

Please consult **page 7** for the palette of DatesWeiser finishes. Natural stone, non-standard glass and veneer, and other technology options are available. Please email **customerservice@datesweiser.com** for a custom quote. Consult technical information on **page 289** for construction details and technical information.

3H Highline Credenza

99” Long
02C3H99

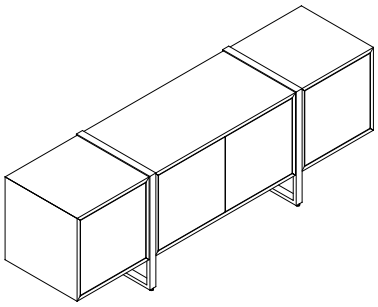

Starting Price: $14,686

99” 3 High credenza, all doors, satin lacquer, powder coat legs

Pattern Number: 02C3H99

Step 1. Top Material

NT	No Top
FG	Full Glass
SG	3 Section
CG	Center Section only

Step 2. Top Finish

		SECTION TOP	CENTER TOP	FULL TOP
GC00	Clear Glass	N/A	N/A	+1,370
GC _ _	Clear Glass back painted	+1,761	+943	N/A
GE _ _	Etched Glass back painted	+2,413	+1,233	N/A
CS01	Corian Glacier white	+3,201	+1,711	N/A
QS _ _	Caesarstone	+6,400	+3,422	N/A

Step 3. Case Finish

SL _ _	Satin Lacquer	+0
T1	Veneer Tier 1	+2,997
T2	Veneer Tier 2	+6,227
HG _ _	High Gloss Polyester	+11,757

Step 4. Leg Finish

MC _ _	Powder Coat	+0
PM01	Polished Chrome	+342
PM02	Satin Nickel	+342
PM03	Oil Rubbed Bronze	+638

Step 5. Door/Drawer Face Finish

SL _ _	Satin Lacquer	+0
T1 _ _	Veneer Tier 1	+999
T2 _ _	Veneer Tier 2	+2,076
HG _ _	High Gloss Polyester	+3,919

Step 6. Configuration (3 positions – Left/Center/Right)

Specify Left to Right: Select case configurations for 3 available positions

3 _ _ 24	Left
3 _ _ 46	Center
3 _ _ 24	Right

LEFT

3DR24	Door	+0
3DW24	Drawers	+1,121
3OW24	Open over Drawer	+611
3OR24	Open over Door	+585
3TT24	Trash thru Top	+719
3TP24	Trash Pull-Out	+1,256
3AV24	AV Case	+395

CENTER

3DR46	Doors	+0
3DW46	Drawers	+1,398
3OW46	Open over Drawers	+1,079
3OR46	Open over Doors	+325
3AV46	AV Case	+56

RIGHT

3DR24	Door	+0
3DW24	Drawers	+1,121
3OW24	Open over Drawer	+611
3OR24	Open over Door	+585
3TT24	Trash thru Top	+719
3TP24	Trash Pull-Out	+1,256
3AV24	AV Case	+395

Please consult **page 7** for the palette of DatesWeiser finishes. Natural stone, non-standard glass and veneer, and other technology options are available. Please email **customerservice@datesweiser.com** for a custom quote. Consult technical information on **page 289** for construction details and technical information.

Highline Fifty Collection

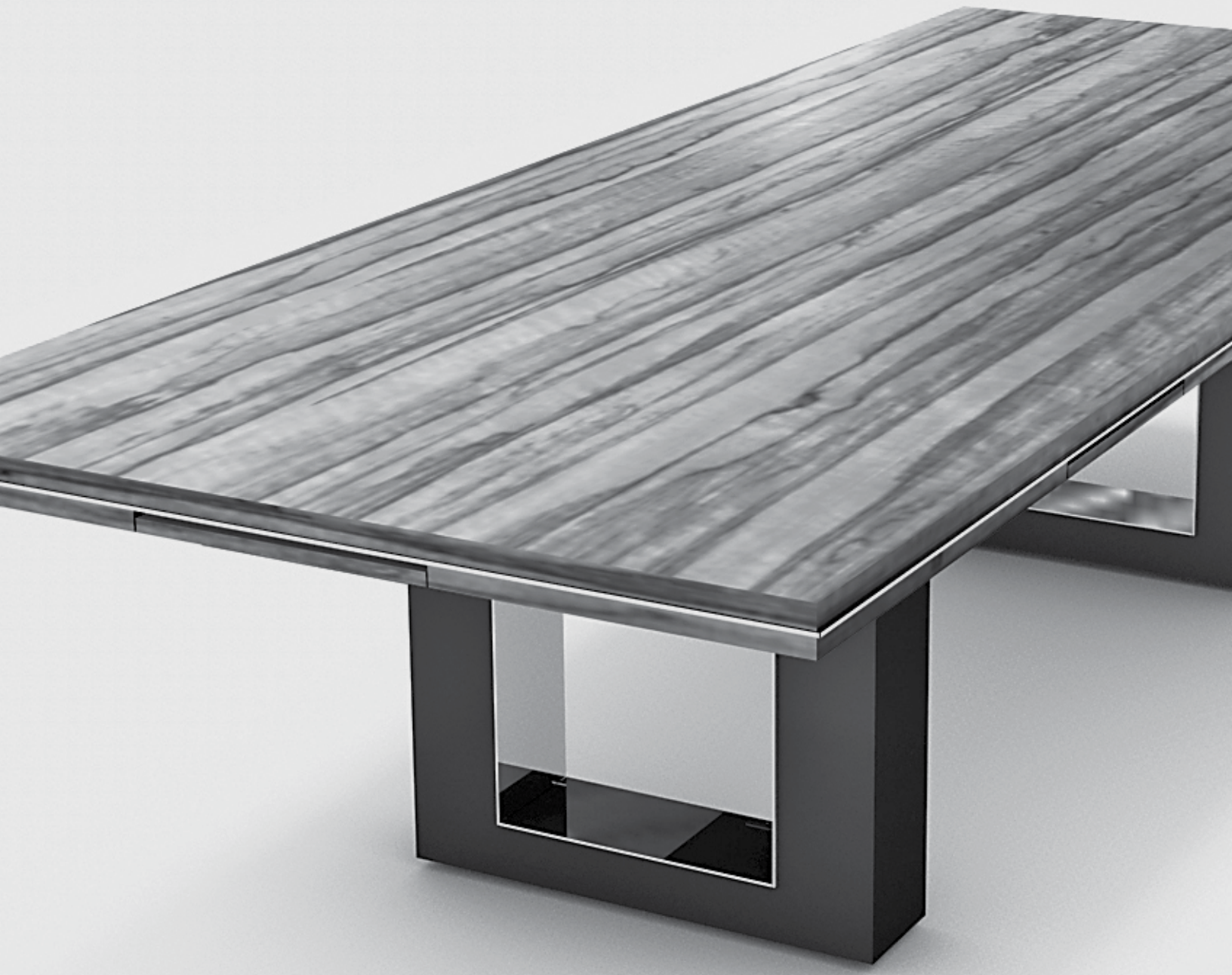

DATESWEISER

Highline Fifty Conference Tables Index

48″ width

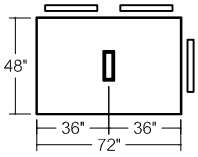

03R48X72
6 Person Table

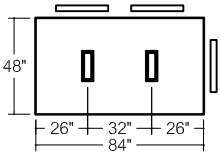

03R48X84
6 Person Table

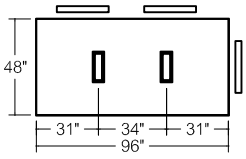

03R48X96
6 Person Table

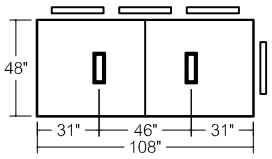

03R48X108
8 Person Table

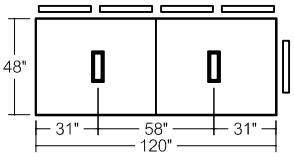

03R48X120
10 Person Table

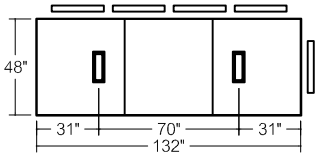

03R48X132
10 Person Table

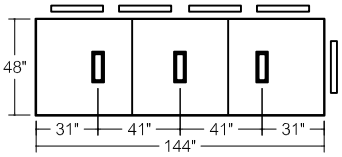

03R48X144
10 Person Table

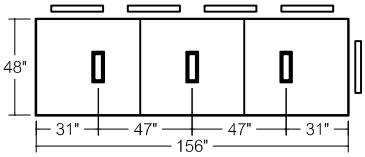

03R48X156
10 Person Table

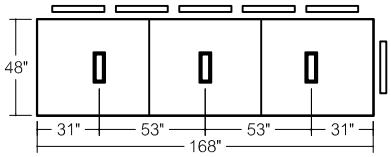

03R48X168
12 Person Table

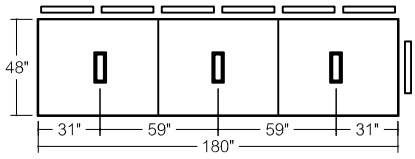

03R48X180
14 Person Table

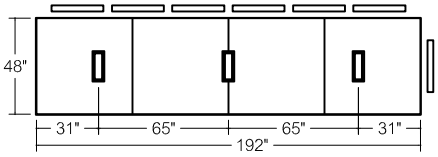

03R48X192
14 Person Table

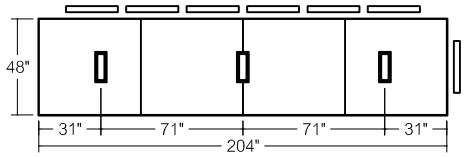

03R48X204
14 Person Table

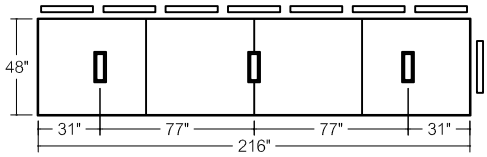

03R48X216
16 Person Table

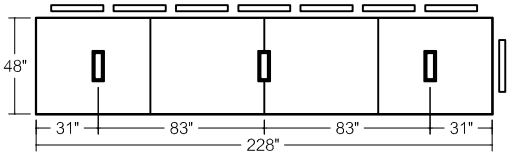

03R48X228
16 Person Table

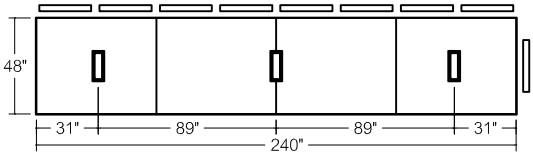

03R48X240
18 Person Table

Highline Fifty Rectangular Conference Table

48”x72”/ 6 Person
03R48X72

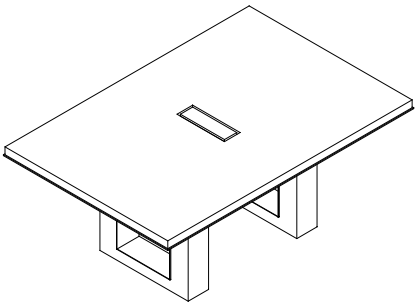

Starting Price: $13,019

48x72 table, slab veneer Tier 1 top, open painted base with no metal trim, powder coat finish

Pattern Number: 03R48X72

Step 1. Top Material

S	Slab (veneer only)
V	Veneer layered
G	Glass layered
C	Corian layered
Q	Caesarstone layered

Step 2. Base Options

ON	Open Base, no metal trim	+ 0
MC _ _	Open Base, MC metal trim	+3,872
PM01	Open Base, PM01 metal trim	+4,035
PM02	Open Base, PM02 metal trim	+4,035
PM03	Open Base, PM03 metal trim	+5,446

Step 3. Metal Edge Finish

MC _ _	Powder Coat	+0
PM01	Polished Chrome	+682
PM02	Satin Nickel	+558
PM03	Oil Rubbed Bronze	+712

Step 4A. Top Finish

T1 _ _	Veneer Tier 1	+0
T2 _ _	Veneer Tier 2	+552
GC _ _	Clear Glass, back painted	+2,376
GE _ _	Etched matte Glass, back painted	+2,856
CS01	Corian Glacier White	+3,480
QS _ _	Caesarstone	+9,000

Step 4B. Lower Layer Finish (Layer top only)

SL _ _	Satin Lacquer	+276
T _ _ _	Veneer Tier 1, 2, 3	+441
HG _ _	High Gloss Polyester	+485

Step 5. Base Finish

T1 _ _	Veneer Tier 1	+750
T2 _ _	Veneer Tier 2	+1,576
SL _ _	Satin Lacquer	+0
HG _ _	High Gloss Polyester	+3,438

Step 6. Power & Connectivity Access: Optional

DRHW	Drawer, Hardwired (layered edge only), Qty 4	+6,828
DRPI	Drawer, Plug In (layered edge only), Qty 4	+5,844
TMHW	Tabletop Metal lid, Hardwired, Qty 1	+3,746
TMPI	Tabletop Metal lid, Plug In, Qty 1	+3,191
TWHW	Tabletop Wood lid, Hardwired (veneer tops only), Qty 1	+3,433
TWPI	Tabletop Wood lid, Plug In (veneer tops only), Qty 1	+2,878
UMHW	Undermount, Hardwired, Qty 4	+4,076
UMPI	Undermount, Plug In, Qty 4	+2,964

Step 7. Microphone and/or Grommet Accommodations: Optional

MA _ _	Microphone hole (factory cut)	Qty _ _ x 321 each
GM _ _	2” Grommet hole (factory cut), liner, lid, in matching metal finish	Qty _ _ x 423 each

Please consult **page 7** for the palette of DatesWeiser finishes. Natural stone, non-standard glass and veneer, and other technology options are available. Please email **customerservice@datesweiser.com** for a custom quote. Consult technical information on **page 294** for construction details and technical information.

Highline Fifty Rectangular Conference Table

48”x84”/ 6 Person
03R48X84

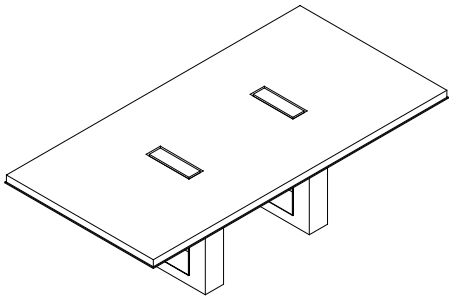

Starting Price: $13,976

48x84 table, slab veneer Tier 1 top, open painted base with no metal trim, powder coat finish

Pattern Number: 03R48X84

Step 1. Top Material	
S	Slab (veneer only)
V	Veneer layered
G	Glass layered
C	Corian layered
Q	Caesarstone layered

Step 2. Base Options		
ON	Open Base, no metal trim	+ 0
MC _ _	Open Base, MC metal trim	+3,872
PM01	Open Base, PM01 metal trim	+4,035
PM02	Open Base, PM02 metal trim	+4,035
PM03	Open Base, PM03 metal trim	+5,446

Step 3. Metal Edge Finish		
MC _ _	Powder Coat	+0
PM01	Polished Chrome	+1,098
PM02	Satin Nickel	+497
PM03	Oil Rubbed Bronze	+897

Step 4A. Top Finish		
T1 _ _	Veneer Tier 1	+0
T2 _ _	Veneer Tier 2	+644
GC _ _	Clear Glass, back painted	+2,772
GE _ _	Etched matte Glass, back painted	+3,332
CS01	Corian Glacier White	+4,060
QS _ _	Caesarstone	+10,500

Step 4B. Lower Layer Finish (Layer top only)		
SL _ _	Satin Lacquer	+331
T _ _ _	Veneer Tier 1, 2, 3	+502
HG _ _	High Gloss Polyester	+552

Step 5. Base Finish		
T1 _ _	Veneer Tier 1	+750
T2 _ _	Veneer Tier 2	+1,576
SL _ _	Satin Lacquer	+0
HG _ _	High Gloss Polyester	+3,438

Step 6. Power & Connectivity Access: Optional		
DRHW	Drawer, Hardwired (layered edge only), Qty 4	+6,828
DRPI	Drawer, Plug In (layered edge only), Qty 4	+5,844
TMHW	Tabletop Metal lid, Hardwired, Qty 2	+7,492
TMPI	Tabletop Metal lid, Plug In, Qty 2	+6,382
TWHW	Tabletop Wood lid, Hardwired (veneer tops only), Qty 2	+6,866
TWPI	Tabletop Wood lid, Plug In (veneer tops only), Qty 2	+5,756
UMHW	Undermount, Hardwired, Qty 4	+4,076
UMPI	Undermount, Plug In, Qty 4	+2,964

Step 7. Microphone and/or Grommet Accommodations: Optional		
MA _ _	Microphone hole (factory cut)	Qty _ _ x 321 each
GM _ _	2” Grommet hole (factory cut), liner, lid, in matching metal finish	Qty _ _ x 423 each

Please consult **page 7** for the palette of DatesWeiser finishes. Natural stone, non-standard glass and veneer, and other technology options are available. Please email **customerservice@datesweiser.com** for a custom quote. Consult technical information on **page 294** for construction details and technical information.

Highline Fifty Rectangular Conference Table

48”x96”/ 6 Person
03R48X96

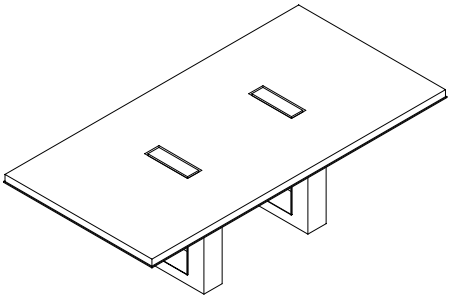

Starting Price: $14,700

48x96 table, slab veneer Tier 1 top, open painted base with no metal trim, powder coat finish

Pattern Number: 03R48X96

Step 1. Top Material

S	Slab (veneer only)
V	Veneer layered
G	Glass layered
C	Corian layered
Q	Caesarstone layered

Step 2. Base Options

ON	Open Base, no metal trim	+ 0
MC _ _	Open Base, MC metal trim	+3,872
PM01	Open Base, PM01 metal trim	+4,035
PM02	Open Base, PM02 metal trim	+4,035
PM03	Open Base, PM03 metal trim	+5,446

Step 3. Metal Edge Finish

MC _ _	Powder Coat	+0
PM01	Polished Chrome	+1,098
PM02	Satin Nickel	+497
PM03	Oil Rubbed Bronze	+879

Step 4A. Top Finish

T1 _ _	Veneer Tier 1	+0
T2 _ _	Veneer Tier 2	+736
GC _ _	Clear Glass, back painted	+3,168
GE _ _	Etched matte Glass, back painted	+3,809
CS01	Corian Glacier White	+4,640
QS _ _	Caesarstone	+12,000

Step 4B. Lower Layer Finish (Layer top only)

SL _ _	Satin Lacquer	+347
T _ _ _	Veneer Tier 1, 2, 3	+523
HG _ _	High Gloss Polyester	+577

Step 5. Base Finish

T1 _ _	Veneer Tier 1	+750
T2 _ _	Veneer Tier 2	+1,576
SL _ _	Satin Lacquer	+0
HG _ _	High Gloss Polyester	+3,438

Step 6. Power & Connectivity Access: Optional

DRHW	Drawer, Hardwired (layered edge only), Qty 4	+6,828
DRPI	Drawer, Plug In (layered edge only), Qty 4	+5,844
TMHW	Tabletop Metal lid, Hardwired, Qty 2	+7,492
TMPI	Tabletop Metal lid, Plug In, Qty 2	+6,382
TWHW	Tabletop Wood lid, Hardwired (veneer tops only), Qty 2	+6,866
TWPI	Tabletop Wood lid, Plug In (veneer tops only), Qty 2	+5,756
UMHW	Undermount, Hardwired, Qty 4	+4,076
UMPI	Undermount, Plug In, Qty 4	+2,964

Step 7. Microphone and/or Grommet Accommodations: Optional

MA _ _	Microphone hole (factory cut)	Qty _ _ x 321 each
GM _ _	2” Grommet hole (factory cut), liner, lid, in matching metal finish	Qty _ _ x 423 each

Please consult **page 7** for the palette of DatesWeiser finishes. Natural stone, non-standard glass and veneer, and other technology options are available. Please email **customerservice@datesweiser.com** for a custom quote. Consult technical information on **page 294** for construction details and technical information.

Highline Fifty Rectangular Conference Table

48”x108”/ 8 Person
03R48X108

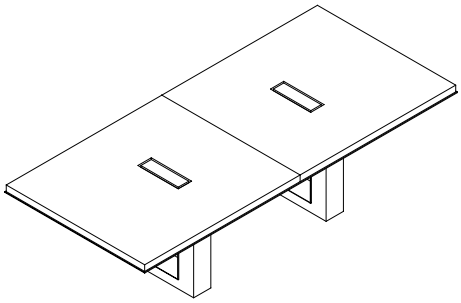

Starting Price: $15,979

48x108 table, slab veneer Tier 1 top, open painted base with no metal trim, powder coat finish

Pattern Number: 03R48X108

Step 1. Top Material	
S	Slab (veneer only)
V	Veneer layered
G	Glass layered
C	Corian layered
Q	Caesarstone layered

Step 2. Base Options		
ON	Open Base, no metal trim	+ 0
MC _ _	Open Base, MC metal trim	+3,872
PM01	Open Base, PM01 metal trim	+4,035
PM02	Open Base, PM02 metal trim	+4,035
PM03	Open Base, PM03 metal trim	+5,446

Step 3. Metal Edge Finish		
MC _ _	Powder Coat	+0
PM01	Polished Chrome	+1,098
PM02	Satin Nickel	+497
PM03	Oil Rubbed Bronze	+879

Step 4A. Top Finish		
T1 _ _	Veneer Tier 1	+0
T2 _ _	Veneer Tier 2	+828
GC _ _	Clear Glass, back painted	+3,564
GE _ _	Etched matte Glass, back painted	+4,284
CS01	Corian Glacier White	+5,220
QS _ _	Caesarstone	+13,500

Step 4B. Lower Layer Finish (Layer top only)		
SL _ _	Satin Lacquer	+380
T _ _ _	Veneer Tier 1, 2, 3	+579
HG _ _	High Gloss Polyester	+637

Step 5. Base Finish		
T1 _ _	Veneer Tier 1	+750
T2 _ _	Veneer Tier 2	+1,576
SL _ _	Satin Lacquer	+0
HG _ _	High Gloss Polyester	+3,438

Step 6. Power & Connectivity Access: Optional		
DRHW	Drawer, Hardwired (layered edge only), Qty 4	+6,828
DRPI	Drawer, Plug In (layered edge only), Qty 4	+5,844
TMHW	Tabletop Metal lid, Hardwired, Qty 2	+7,492
TMPI	Tabletop Metal lid, Plug In, Qty 2	+6,382
TWHW	Tabletop Wood lid, Hardwired (veneer tops only), Qty 2	+6,866
TWPI	Tabletop Wood lid, Plug In (veneer tops only), Qty 2	+5,756
UMHW	Undermount, Hardwired, Qty 4	+4,076
UMPI	Undermount, Plug In, Qty 4	+2,964

Step 7. Microphone and/or Grommet Accommodations: Optional		
MA _ _	Microphone hole (factory cut)	Qty _ _ x 321 each
GM _ _	2” Grommet hole (factory cut), liner, lid, in matching metal finish	Qty _ _ x 423 each

Please consult **page 7** for the palette of DatesWeiser finishes. Natural stone, non-standard glass and veneer, and other technology options are available. Please email **customerservice@datesweiser.com** for a custom quote. Consult technical information on **page 294** for construction details and technical information.

Highline Fifty Rectangular Conference Table

48”x120”/ 10 Person
03R48X120

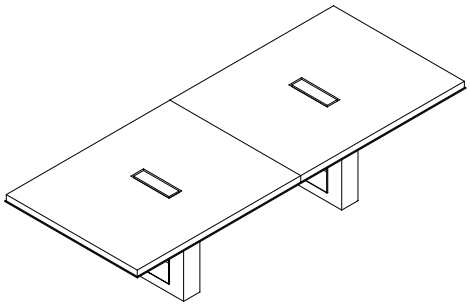

Starting Price: $16,882

48x120 table, slab veneer Tier 1 top, open painted base with no metal trim, powder coat finish

Pattern Number: 03R48X120

Step 1. Top Material		
S	Slab (veneer only)	
V	Veneer layered	
G	Glass layered	
C	Corian layered	
Q	Caesarstone layered	

Step 2. Base Options		
ON	Open Base, no metal trim	+ 0
MC _ _	Open Base, MC metal trim	+3,872
PM01	Open Base, PM01 metal trim	+4,035
PM02	Open Base, PM02 metal trim	+4,035
PM03	Open Base, PM03 metal trim	+5,446

Step 3. Metal Edge Finish		
MC _ _	Powder Coat	+0
PM01	Polished Chrome	+1,098
PM02	Satin Nickel	+497
PM03	Oil Rubbed Bronze	+879

Step 4A. Top Finish		
T1 _ _	Veneer Tier 1	+0
T2 _ _	Veneer Tier 2	+920
GC _ _	Clear Glass, back painted	+3,960
GE _ _	Etched matte Glass, back painted	+4,760
CS01	Corian Glacier White	+5,800
QS _ _	Caesarstone	+15,000

Step 4B. Lower Layer Finish (Layer top only)		
SL _ _	Satin Lacquer	+496
T _ _ _	Veneer Tier 1, 2, 3	+661
HG _ _	High Gloss Polyester	+727

Step 5. Base Finish		
T1 _ _	Veneer Tier 1	+750
T2 _ _	Veneer Tier 2	+1,576
SL _ _	Satin Lacquer	+0
HG _ _	High Gloss Polyester	+3,438

Step 6. Power & Connectivity Access: Optional		
DRHW	Drawer, Hardwired (layered edge only), Qty 6	+10,242
DRPI	Drawer, Plug In (layered edge only), Qty 6	+8,766
TMHW	Tabletop Metal lid, Hardwired, Qty 2	+7,492
TMPI	Tabletop Metal lid, Plug In, Qty 2	+6,382
TWHW	Tabletop Wood lid, Hardwired (veneer tops only), Qty 2	+6,866
TWPI	Tabletop Wood lid, Plug In (veneer tops only), Qty 2	+5,756
UMHW	Undermount, Hardwired, Qty 6	+6,114
UMPI	Undermount, Plug In, Qty 6	+4,446

Step 7. Microphone and/or Grommet Accommodations: Optional		
MA _ _	Microphone hole (factory cut)	Qty _ _ x 321 each
GM _ _	2” Grommet hole (factory cut), liner, lid, in matching metal finish	Qty _ _ x 423 each

Please consult **page 7** for the palette of DatesWeiser finishes. Natural stone, non-standard glass and veneer, and other technology options are available. Please email **customerservice@datesweiser.com** for a custom quote. Consult technical information on **page 294** for construction details and technical information.

Highline Fifty Rectangular Conference Table

48”x132”/ 10 Person
03R48X132

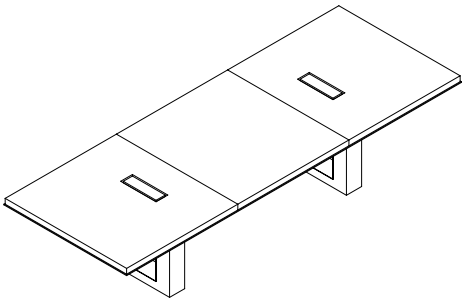

Starting Price: $21,093

48x132 table, slab veneer Tier 1 top, open painted base with no metal trim, powder coat finish

Pattern Number: 03R48X132

Step 1. Top Material	
S	Slab (veneer only)
V	Veneer layered
G	Glass layered
C	Corian layered
Q	Caesarstone layered

Step 2. Base Options		
ON	Open Base, no metal trim	+ 0
MC _ _	Open Base, MC metal trim	+3,872
PM01	Open Base, PM01 metal trim	+4,035
PM02	Open Base, PM02 metal trim	+4,035
PM03	Open Base, PM03 metal trim	+5,446

Step 3. Metal Edge Finish		
MC _ _	Powder Coat	+0
PM01	Polished Chrome	+1,147
PM02	Satin Nickel	+432
PM03	Oil Rubbed Bronze	+779

Step 4A. Top Finish		
T1 _ _	Veneer Tier 1	+0
T2 _ _	Veneer Tier 2	+1,012
GC _ _	Clear Glass, back painted	+4,356
GE _ _	Etched matte Glass, back painted	+5,236
CS01	Corian Glacier White	+6,380
QS _ _	Caesarstone	+16,500

Step 4B. Lower Layer Finish (Layer top only)		
SL _ _	Satin Lacquer	+502
T _ _ _	Veneer Tier 1, 2, 3	+706
HG _ _	High Gloss Polyester	+776

Step 5. Base Finish		
T1 _ _	Veneer Tier 1	+750
T2 _ _	Veneer Tier 2	+1,576
SL _ _	Satin Lacquer	+0
HG _ _	High Gloss Polyester	+3,438

Step 6. Power & Connectivity Access: Optional		
DRHW	Drawer, Hardwired (layered edge only), Qty 6	+10,242
DRPI	Drawer, Plug In (layered edge only), Qty 6	+8,766
TMHW	Tabletop Metal lid, Hardwired, Qty 2	+7,492
TMPI	Tabletop Metal lid, Plug In, Qty 2	+6,382
TWHW	Tabletop Wood lid, Hardwired (veneer tops only), Qty 2	+6,866
TWPI	Tabletop Wood lid, Plug In (veneer tops only), Qty 2	+5,756
UMHW	Undermount, Hardwired, Qty 6	+6,114
UMPI	Undermount, Plug In, Qty 6	+4,446

Step 7. Microphone and/or Grommet Accommodations: Optional		
MA _ _	Microphone hole (factory cut)	Qty _ _ x 321 each
GM _ _	2” Grommet hole (factory cut), liner, lid, in matching metal finish	Qty _ _ x 423 each

Please consult **page 7** for the palette of DatesWeiser finishes. Natural stone, non-standard glass and veneer, and other technology options are available. Please email **customerservice@datesweiser.com** for a custom quote. Consult technical information on **page 294** for construction details and technical information.

Highline Fifty Rectangular Conference Table

48”x144”/ 10 Person
03R48X144

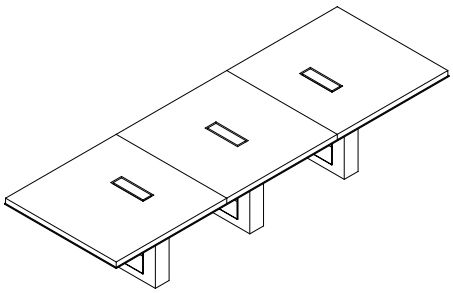

Starting Price: $22,145

48x144 table, slab veneer Tier 1 top, open painted base with no metal trim, powder coat finish

Pattern Number: 03R48X144

Step 1. Top Material	
S	Slab (veneer only)
V	Veneer layered
G	Glass layered
C	Corian layered
Q	Caesarstone layered

Step 2. Base Options		
ON	Open Base, no metal trim	+ 0
MC _ _	Open Base, MC metal trim	+5,808
PM01	Open Base, PM01 metal trim	+6,053
PM02	Open Base, PM02 metal trim	+6,053
PM03	Open Base, PM03 metal trim	+8,169

Step 3. Metal Edge Finish		
MC _ _	Powder Coat	+0
PM01	Polished Chrome	+1,147
PM02	Satin Nickel	+432
PM03	Oil Rubbed Bronze	+779

Step 4A. Top Finish		
T1 _ _	Veneer Tier 1	+0
T2 _ _	Veneer Tier 2	+1,104
GC _ _	Clear Glass, back painted	+4,752
GE _ _	Etched matte Glass, back painted	+5,712
CS01	Corian Glacier White	+6,960
QS _ _	Caesarstone	+18,000

Step 4B. Lower Layer Finish (Layer top only)		
SL _ _	Satin Lacquer	+513
T _ _ _	Veneer Tier 1, 2, 3	+750
HG _ _	High Gloss Polyester	+824

Step 5. Base Finish		
T1 _ _	Veneer Tier 1	+1,125
T2 _ _	Veneer Tier 2	+2,364
SL _ _	Satin Lacquer	+0
HG _ _	High Gloss Polyester	+5,157

Step 6. Power & Connectivity Access: Optional		
DRHW	Drawer, Hardwired (layered edge only), Qty 6	+10,242
DRPI	Drawer, Plug In (layered edge only), Qty 6	+8,766
TMHW	Tabletop Metal lid, Hardwired, Qty 3	+11,238
TMPI	Tabletop Metal lid, Plug In, Qty 3	+9,573
TWHW	Tabletop Wood lid, Hardwired (veneer tops only), Qty 3	+10,299
TWPI	Tabletop Wood lid, Plug In (veneer tops only), Qty 3	+6,894
UMHW	Undermount, Hardwired, Qty 6	+8,634
UMPI	Undermount, Plug In, Qty 6	+4,446

Step 7. Microphone and/or Grommet Accommodations: Optional		
MA _ _	Microphone hole (factory cut)	Qty _ _ x 321 each
GM _ _	2” Grommet hole (factory cut), liner, lid, in matching metal finish	Qty _ _ x 423 each

Please consult **page 7** for the palette of DatesWeiser finishes. Natural stone, non-standard glass and veneer, and other technology options are available. Please email **customerservice@datesweiser.com** for a custom quote. Consult technical information on **page 294** for construction details and technical information.

Highline Fifty Rectangular Conference Table

48”x156”/ 10 Person
03R48X156

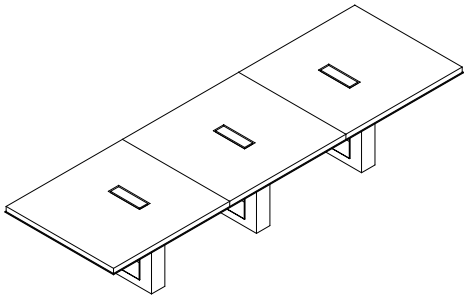

Starting Price: $22,833

48x156 table, slab veneer Tier 1 top, open painted base with no metal trim, powder coat finish

Pattern Number: 03R48X156

Step 1. Top Material	
S	Slab (veneer only)
V	Veneer layered
G	Glass layered
C	Corian layered
Q	Caesarstone layered

Step 2. Base Options		
ON	Open Base, no metal trim	+ 0
MC _ _	Open Base, MC metal trim	+5,808
PM01	Open Base, PM01 metal trim	+6,053
PM02	Open Base, PM02 metal trim	+6,053
PM03	Open Base, PM03 metal trim	+8,169

Step 3. Metal Edge Finish		
MC _ _	Powder Coat	+0
PM01	Polished Chrome	+1,147
PM02	Satin Nickel	+432
PM03	Oil Rubbed Bronze	+779

Step 4A. Top Finish		
T1 _ _	Veneer Tier 1	+0
T2 _ _	Veneer Tier 2	+1,196
GC _ _	Clear Glass, back painted	+5,148
GE _ _	Etched matte Glass, back painted	+6,188
CS01	Corian Glacier White	+7,540
QS _ _	Caesarstone	+19,500

Step 4B. Lower Layer Finish (Layer top only)		
SL _ _	Satin Lacquer	+529
T _ _ _	Veneer Tier 1, 2, 3	+755
HG _ _	High Gloss Polyester	+831

Step 5. Base Finish		
T1 _ _	Veneer Tier 1	+1,125
T2 _ _	Veneer Tier 2	+2,364
SL _ _	Satin Lacquer	+0
HG _ _	High Gloss Polyester	+5,157

Step 6. Power & Connectivity Access: Optional		
DRHW	Drawer, Hardwired (layered edge only), Qty 6	+10,242
DRPI	Drawer, Plug In (layered edge only), Qty 6	+8,766
TMHW	Tabletop Metal lid, Hardwired, Qty 3	+11,238
TMPI	Tabletop Metal lid, Plug In, Qty 3	+9,573
TWHW	Tabletop Wood lid, Hardwired (veneer tops only), Qty 3	+10,299
TWPI	Tabletop Wood lid, Plug In (veneer tops only), Qty 3	+8,634
UMHW	Undermount, Hardwired, Qty 6	+6,114
UMPI	Undermount, Plug In, Qty 6	+4,446

Step 7. Microphone and/or Grommet Accommodations: Optional		
MA _ _	Microphone hole (factory cut)	Qty _ _ x 321 each
GM _ _	2” Grommet hole (factory cut), liner, lid, in matching metal finish	Qty _ _ x 423 each

Please consult **page 7** for the palette of DatesWeiser finishes. Natural stone, non-standard glass and veneer, and other technology options are available. Please email **customerservice@datesweiser.com** for a custom quote. Consult technical information on **page 294** for construction details and technical information.

Highline Fifty Rectangular Conference Table

48”x168”/ 12 Person
03R48X168

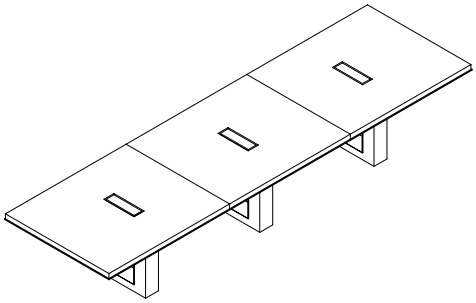

Starting Price: $24,059

48x168 table, slab veneer Tier 1 top, open painted base with no metal trim, powder coat finish

Pattern Number: 03R48X168

Step 1. Top Material

S	Slab (veneer only)
V	Veneer layered
G	Glass layered
C	Corian layered
Q	Caesarstone layered

Step 2. Base Options

ON	Open Base, no metal trim	+ 0
MC _ _	Open Base, MC metal trim	+5,808
PM01	Open Base, PM01 metal trim	+6,053
PM02	Open Base, PM02 metal trim	+6,053
PM03	Open Base, PM03 metal trim	+8,169

Step 3. Metal Edge Finish

MC _ _	Powder Coat	+0
PM01	Polished Chrome	+1,882
PM02	Satin Nickel	+628
PM03	Oil Rubbed Bronze	+984

Step 4A. Top Finish

T1 _ _	Veneer Tier 1	+0
T2 _ _	Veneer Tier 2	+1,288
GC _ _	Clear Glass, back painted	+5,544
GE _ _	Etched matte Glass, back painted	+6,664
CS01	Corian Glacier White	+8,120
QS _ _	Caesarstone	+21,000

Step 4B. Lower Layer Finish (Layer top only)

SL _ _	Satin Lacquer	+579
T _ _ _	Veneer Tier 1, 2, 3	+832
HG _ _	High Gloss Polyester	+916

Step 5. Base Finish

T1 _ _	Veneer Tier 1	+1,125
T2 _ _	Veneer Tier 2	+2,364
SL _ _	Satin Lacquer	+0
HG _ _	High Gloss Polyester	+5,157

Step 6. Power & Connectivity Access: Optional

DRHW	Drawer, Hardwired (layered edge only), Qty 6	+10,242
DRPI	Drawer, Plug In (layered edge only), Qty 6	+8,766
TMHW	Tabletop Metal lid, Hardwired, Qty 3	+11,238
TMPI	Tabletop Metal lid, Plug In, Qty 3	+9,573
TWHW	Tabletop Wood lid, Hardwired (veneer tops only), Qty 3	+10,299
TWPI	Tabletop Wood lid, Plug In (veneer tops only), Qty 3	+8,634
UMHW	Undermount, Hardwired, Qty 6	+6,114
UMPI	Undermount, Plug In, Qty 6	+4,446

Step 7. Microphone and/or Grommet Accommodations: Optional

MA _ _	Microphone hole (factory cut)	Qty _ _ x 321 each
GM _ _	2” Grommet hole (factory cut), liner, lid, in matching metal finish	Qty _ _ x 423 each

Please consult **page 7** for the palette of DatesWeiser finishes. Natural stone, non-standard glass and veneer, and other technology options are available. Please email **customerservice@datesweiser.com** for a custom quote. Consult technical information on **page 294** for construction details and technical information.

Highline Fifty Rectangular Conference Table

48”x180”/ 14 Person
03R48X180

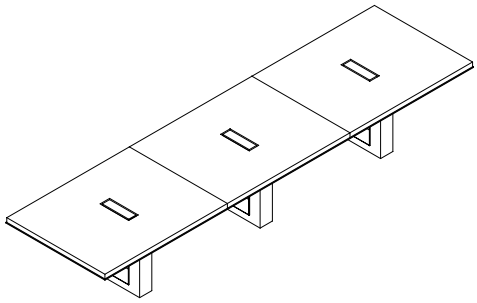

Starting Price: $24,813

48x180 table, slab veneer Tier 1 top, open painted base with no metal trim, powder coat finish

Pattern Number: 03R48X180

Step 1. Top Material	
S	Slab (veneer only)
V	Veneer layered
G	Glass layered
C	Corian layered
Q	Caesarstone layered

Step 2. Base Options		
ON	Open Base, no metal trim	+ 0
MC _ _	Open Base, MC metal trim	+5,808
PM01	Open Base, PM01 metal trim	+6,053
PM02	Open Base, PM02 metal trim	+6,053
PM03	Open Base, PM03 metal trim	+8,169

Step 3. Metal Edge Finish		
MC _ _	Powder Coat	+0
PM01	Polished Chrome	+1,882
PM02	Satin Nickel	+628
PM03	Oil Rubbed Bronze	+984

Step 4A. Top Finish		
T1 _ _	Veneer Tier 1	+0
T2 _ _	Veneer Tier 2	+1,110
GC _ _	Clear Glass, back painted	+5,940
GE _ _	Etched matte Glass, back painted	+7,140
CS01	Corian Glacier White	+8,700
QS _ _	Caesarstone	+22,500

Step 4B. Lower Layer Finish (Layer top only)		
SL _ _	Satin Lacquer	+612
T _ _ _	Veneer Tier 1, 2, 3	+920
HG _ _	High Gloss Polyester	+1,012

Step 5. Base Finish		
T1 _ _	Veneer Tier 1	+1,125
T2 _ _	Veneer Tier 2	+2,346
SL _ _	Satin Lacquer	+0
HG _ _	High Gloss Polyester	+5,157

Step 6. Power & Connectivity Access: Optional		
DRHW	Drawer, Hardwired (layered edge only), Qty 8	+13,656
DRPI	Drawer, Plug In (layered edge only), Qty 8	+11,688
TMHW	Tabletop Metal lid, Hardwired, Qty 3	+11,238
TMPI	Tabletop Metal lid, Plug In, Qty 3	+9,573
TWHW	Tabletop Wood lid, Hardwired (veneer tops only), Qty 3	+10,299
TWPI	Tabletop Wood lid, Plug In (veneer tops only), Qty 3	+8,634
UMHW	Undermount, Hardwired, Qty 8	+8,152
UMPI	Undermount, Plug In, Qty 8	+5,928

Step 7. Microphone and/or Grommet Accommodations: Optional		
MA _ _	Microphone hole (factory cut)	Qty _ _ x 321 each
GM _ _	2” Grommet hole (factory cut), liner, lid, in matching metal finish	Qty _ _ x 423 each

Please consult **page 7** for the palette of DatesWeiser finishes. Natural stone, non-standard glass and veneer, and other technology options are available. Please email **customerservice@datesweiser.com** for a custom quote. Consult technical information on **page 294** for construction details and technical information.

Highline Fifty Rectangular Conference Table

48”x192”/ 14 Person
03R48X192

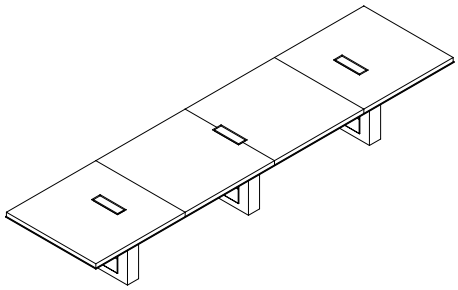

Starting Price: $28,681

48x192 table, slab veneer Tier 1 top, open painted base with no metal trim, powder coat finish

Pattern Number: 03R48X192

Step 1. Top Material	
S	Slab (veneer only)
V	Veneer layered
G	Glass layered
C	Corian layered
Q	Caesarstone layered

Step 2. Base Options		
ON	Open Base, no metal trim	+ 0
MC _ _	Open Base, MC metal trim	+5,808
PM01	Open Base, PM01 metal trim	+6,053
PM02	Open Base, PM02 metal trim	+6,053
PM03	Open Base, PM03 metal trim	+8,169

Step 3. Metal Edge Finish		
MC _ _	Powder Coat	+0
PM01	Polished Chrome	+1,882
PM02	Satin Nickel	+628
PM03	Oil Rubbed Bronze	+984

Step 4A. Top Finish		
T1 _ _	Veneer Tier 1	+0
T2 _ _	Veneer Tier 2	+1,472
GC _ _	Clear Glass, back painted	+6,336
GE _ _	Etched matte Glass, back painted	+7,616
CS01	Corian Glacier White	+9,280
QS _ _	Caesarstone	+24,000

Step 4B. Lower Layer Finish (Layer top only)		
SL _ _	Satin Lacquer	+666
T _ _ _	Veneer Tier 1, 2, 3	+942
HG _ _	High Gloss Polyester	+1,037

Step 5. Base Finish		
T1 _ _	Veneer Tier 1	+1,125
T2 _ _	Veneer Tier 2	+2,364
SL _ _	Satin Lacquer	+0
HG _ _	High Gloss Polyester	+5,157

Step 6. Power & Connectivity Access: Optional		
DRHW	Drawer, Hardwired (layered edge only), Qty 8	+13,656
DRPI	Drawer, Plug In (layered edge only), Qty 8	+11,688
TMHW	Tabletop Metal lid, Hardwired, Qty 3	+11,238
TMPI	Tabletop Metal lid, Plug In, Qty 3	+9,573
TWHW	Tabletop Wood lid, Hardwired (veneer tops only), Qty 3	+10,299
TWPI	Tabletop Wood lid, Plug In (veneer tops only), Qty 3	+8,634
UMHW	Undermount, Hardwired, Qty 8	+8,152
UMPI	Undermount, Plug In, Qty 8	+5,928

Step 7. Microphone and/or Grommet Accommodations: Optional		
MA _ _	Microphone hole (factory cut)	Qty _ _ x 321 each
GM _ _	2” Grommet hole (factory cut), liner, lid, in matching metal finish	Qty _ _ x 423 each

Please consult **page 7** for the palette of DatesWeiser finishes. Natural stone, non-standard glass and veneer, and other technology options are available. Please email **customerservice@datesweiser.com** for a custom quote. Consult technical information on **page 294** for construction details and technical information.

Highline Fifty Rectangular Conference Table

48”x204”/ 14 Person
03R48X204

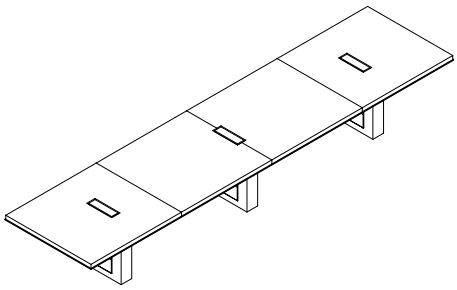

Starting Price: $29,464

48x204 table, slab veneer Tier 1 top, open painted base with no metal trim, powder coat finish

Pattern Number: 03R48X204

Step 1. Top Material	
S	Slab (veneer only)
V	Veneer layered
G	Glass layered
C	Corian layered
Q	Caesarstone layered

Step 2. Base Options		
ON	Open Base, no metal trim	+ 0
MC _ _	Open Base, MC metal trim	+5,808
PM01	Open Base, PM01 metal trim	+6,053
PM02	Open Base, PM02 metal trim	+6,053
PM03	Open Base, PM03 metal trim	+8,169

Step 3. Metal Edge Finish		
MC _ _	Powder Coat	+0
PM01	Polished Chrome	+1,882
PM02	Satin Nickel	+628
PM03	Oil Rubbed Bronze	+984

Step 4A. Top Finish		
T1 _ _	Veneer Tier 1	+0
T2 _ _	Veneer Tier 2	+1,564
GC _ _	Clear Glass, back painted	+6,732
GE _ _	Etched matte Glass, back painted	+8,092
CS01	Corian Glacier White	+9,860
QS _ _	Caesarstone	+25,500

Step 4B. Lower Layer Finish (Layer top only)		
SL _ _	Satin Lacquer	+699
T _ _ _	Veneer Tier 1, 2, 3	+992
HG _ _	High Gloss Polyester	+1,091

Step 5. Base Finish		
T1 _ _	Veneer Tier 1	+1,125
T2 _ _	Veneer Tier 2	+2,364
SL _ _	Satin Lacquer	+0
HG _ _	High Gloss Polyester	+5,157

Step 6. Power & Connectivity Access: Optional		
DRHW	Drawer, Hardwired (layered edge only), Qty 8	+13,656
DRPI	Drawer, Plug In (layered edge only), Qty 8	+11,688
TMHW	Tabletop Metal lid, Hardwired, Qty 3	+11,238
TMPI	Tabletop Metal lid, Plug In, Qty 3	+9,573
TWHW	Tabletop Wood lid, Hardwired (veneer tops only), Qty 3	+10,299
TWPI	Tabletop Wood lid, Plug In (veneer tops only), Qty 3	+8,634
UMHW	Undermount, Hardwired, Qty 8	+8,152
UMPI	Undermount, Plug In, Qty 8	+5,928

Step 7. Microphone and/or Grommet Accommodations: Optional		
MA _ _	Microphone hole (factory cut)	Qty _ _ x 321 each
GM _ _	2” Grommet hole (factory cut), liner, lid, in matching metal finish	Qty _ _ x 423 each

Please consult **page 7** for the palette of DatesWeiser finishes. Natural stone, non-standard glass and veneer, and other technology options are available. Please email **customerservice@datesweiser.com** for a custom quote. Consult technical information on **page 294** for construction details and technical information.

Highline Fifty Rectangular Conference Table

48”x216”/ 16 Person
03R48X216

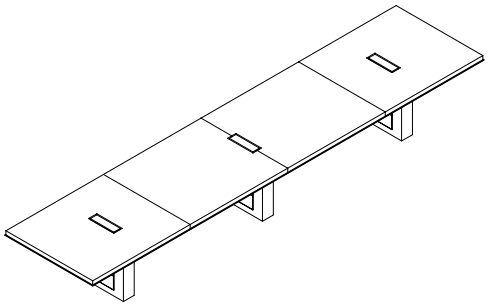

Starting Price: $30,239

48x216 table, slab veneer Tier 1 top, open painted base with no metal trim, powder coat finish

Pattern Number: 03R48X216

Step 1. Top Material		
S	Slab (veneer only)	
V	Veneer layered	
G	Glass layered	
C	Corian layered	
Q	Caesarstone layered	

Step 2. Base Options		
ON	Open Base, no metal trim	+ 0
MC _ _	Open Base, MC metal trim	+5,808
PM01	Open Base, PM01 metal trim	+6,053
PM02	Open Base, PM02 metal trim	+6,053
PM03	Open Base, PM03 metal trim	+8,169

Step 3. Metal Edge Finish		
MC _ _	Powder Coat	+0
PM01	Polished Chrome	+1,882
PM02	Satin Nickel	+628
PM03	Oil Rubbed Bronze	+984

Step 4A. Top Finish		
T1 _ _	Veneer Tier 1	+0
T2 _ _	Veneer Tier 2	+1,656
GC _ _	Clear Glass, back painted	+7,128
GE _ _	Etched matte Glass, back painted	+8,568
CS01	Corian Glacier White	+10,440
QS _ _	Caesarstone	+27,000

Step 4B. Lower Layer Finish (Layer top only)		
SL _ _	Satin Lacquer	+733
T _ _ _	Veneer Tier 1, 2, 3	+1,048
HG _ _	High Gloss Polyester	+1,152

Step 5. Base Finish		
T1 _ _	Veneer Tier 1	+1,125
T2 _ _	Veneer Tier 2	+2,364
SL _ _	Satin Lacquer	+0
HG _ _	High Gloss Polyester	+5,157

Step 6. Power & Connectivity Access: Optional		
DRHW	Drawer, Hardwired (layered edge only), Qty 8	+13,656
DRPI	Drawer, Plug In (layered edge only), Qty 8	+11,688
TMHW	Tabletop Metal lid, Hardwired, Qty 3	+11,238
TMPI	Tabletop Metal lid, Plug In, Qty 3	+9,573
TWHW	Tabletop Wood lid, Hardwired (veneer tops only), Qty 3	+10,299
TWPI	Tabletop Wood lid, Plug In (veneer tops only), Qty 3	+8,634
UMHW	Undermount, Hardwired, Qty 8	+8,152
UMPI	Undermount, Plug In, Qty 8	+5,928

Step 7. Microphone and/or Grommet Accommodations: Optional		
MA _ _	Microphone hole (factory cut)	Qty _ _ x 321 each
GM _ _	2” Grommet hole (factory cut), liner, lid, in matching metal finish	Qty _ _ x 423 each

Please consult **page 7** for the palette of DatesWeiser finishes. Natural stone, non-standard glass and veneer, and other technology options are available. Please email **customerservice@datesweiser.com** for a custom quote. Consult technical information on **page 294** for construction details and technical information.

Highline Fifty Rectangular Conference Table

48”x228”/ 16 Person
03R48X228

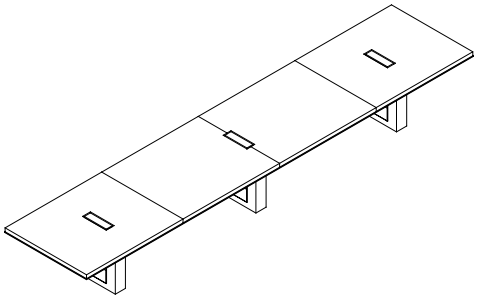

Starting Price: $31,042

48x228 table, slab veneer Tier 1 top, open painted base with no metal trim, powder coat finish

Pattern Number: 03R48X228

Step 1. Top Material	
S	Slab (veneer only)
V	Veneer layered
G	Glass layered
C	Corian layered
Q	Caesarstone layered

Step 2. Base Options		
ON	Open Base, no metal trim	+ 0
MC _ _	Open Base, MC metal trim	+5,808
PM01	Open Base, PM01 metal trim	+6,053
PM02	Open Base, PM02 metal trim	+6,053
PM03	Open Base, PM03 metal trim	+8,169

Step 3. Metal Edge Finish		
MC _ _	Powder Coat	+0
PM01	Polished Chrome	+1,882
PM02	Satin Nickel	+628
PM03	Oil Rubbed Bronze	+1,153

Step 4A. Top Finish		
T1 _ _	Veneer Tier 1	+0
T2 _ _	Veneer Tier 2	+1,748
GC _ _	Clear Glass, back painted	+7,524
GE _ _	Etched matte Glass, back painted	+9,044
CS01	Corian Glacier White	+11,020
QS _ _	Caesarstone	+28,500

Step 4B. Lower Layer Finish (Layer top only)		
SL _ _	Satin Lacquer	+744
T _ _ _	Veneer Tier 1, 2, 3	+1,102
HG _ _	High Gloss Polyester	+1,212

Step 5. Base Finish		
T1 _ _	Veneer Tier 1	+1,125
T2 _ _	Veneer Tier 2	+2,364
SL _ _	Satin Lacquer	+0
HG _ _	High Gloss Polyester	+5,157

Step 6. Power & Connectivity Access: Optional		
DRHW	Drawer, Hardwired (layered edge only), Qty 8	+13,656
DRPI	Drawer, Plug In (layered edge only), Qty 8	+11,688
TMHW	Tabletop Metal lid, Hardwired, Qty 3	+11,238
TMPI	Tabletop Metal lid, Plug In, Qty 3	+9,573
TWHW	Tabletop Wood lid, Hardwired (veneer tops only), Qty 3	+10,299
TWPI	Tabletop Wood lid, Plug In (veneer tops only), Qty 3	+8,634
UMHW	Undermount, Hardwired, Qty 8	+8,152
UMPI	Undermount, Plug In, Qty 8	+5,928

Step 7. Microphone and/or Grommet Accommodations: Optional		
MA _ _	Microphone hole (factory cut)	Qty _ _ x 321 each
GM _ _	2” Grommet hole (factory cut), liner, lid, in matching metal finish	Qty _ _ x 423 each

Please consult **page 7** for the palette of DatesWeiser finishes. Natural stone, non-standard glass and veneer, and other technology options are available. Please email **customerservice@datesweiser.com** for a custom quote. Consult technical information on **page 294** for construction details and technical information.

Highline Fifty Rectangular Conference Table

48”x240”/ 18 Person
03R48X240

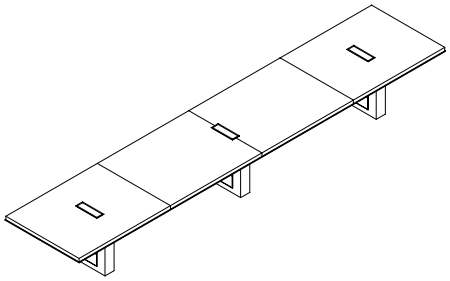

Starting Price: $31,805

48x240 table, slab veneer Tier 1 top, open painted base with no metal trim, powder coat finish

Pattern Number: 03R48X240

Step 1. Top Material		
S	Slab (veneer only)	
V	Veneer layered	
G	Glass layered	
C	Corian layered	
Q	Caesarstone layered	

Step 2. Base Options		
ON	Open Base, no metal trim	+ 0
MC _ _	Open Base, MC metal trim	+5,808
PM01	Open Base, PM01 metal trim	+6,053
PM02	Open Base, PM02 metal trim	+6,053
PM03	Open Base, PM03 metal trim	+8,169

Step 3. Metal Edge Finish		
MC _ _	Powder Coat	+0
PM01	Polished Chrome	+1,882
PM02	Satin Nickel	+628
PM03	Oil Rubbed Bronze	+984

Step 4A. Top Finish		
T1 _ _	Veneer Tier 1	+0
T2 _ _	Veneer Tier 2	+1,840
GC _ _	Clear Glass, back painted	+7,920
GE _ _	Etched matte Glass, back painted	+9,520
CS01	Corian Glacier White	+11,600
QS _ _	Caesarstone	+30,000

Step 4B. Lower Layer Finish (Layer top only)		
SL _ _	Satin Lacquer	+783
T _ _ _	Veneer Tier 1, 2, 3	+1,185
HG _ _	High Gloss Polyester	+1,304

Step 5. Base Finish		
T1 _ _	Veneer Tier 1	+1,125
T2 _ _	Veneer Tier 2	+2,364
SL _ _	Satin Lacquer	+0
HG _ _	High Gloss Polyester	+5,157

Step 6. Power & Connectivity Access: Optional		
DRHW	Drawer, Hardwired (layered edge only), Qty 10	+17,070
DRPI	Drawer, Plug In (layered edge only), Qty 10	+14,610
TMHW	Tabletop Metal lid, Hardwired, Qty 3	+11,238
TMPI	Tabletop Metal lid, Plug In, Qty 3	+9,573
TWHW	Tabletop Wood lid, Hardwired (veneer tops only), Qty 3	+10,299
TWPI	Tabletop Wood lid, Plug In (veneer tops only), Qty 3	+8,634
UMHW	Undermount, Hardwired, Qty 10	+10,190
UMPI	Undermount, Plug In, Qty 10	+7,410

Step 7. Microphone and/or Grommet Accommodations: Optional		
MA _ _	Microphone hole (factory cut)	Qty _ _ x 321 each
GM _ _	2” Grommet hole (factory cut), liner, lid, in matching metal finish	Qty _ _ x 423 each

Please consult **page 7** for the palette of DatesWeiser finishes. Natural stone, non-standard glass and veneer, and other technology options are available. Please email **customerservice@datesweiser.com** for a custom quote. Consult technical information on **page 294** for construction details and technical information.

Highline Fifty Conference Tables Index

54″ width

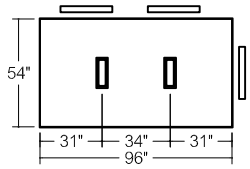

03R54X96
6 Person Table

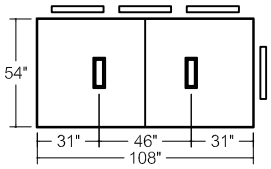

03R54X108
8 Person Table

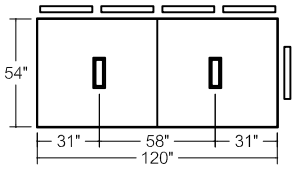

03R54X120
10 Person Table

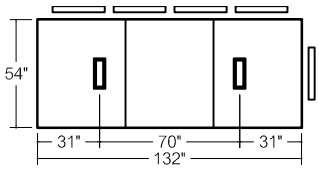

03R54X132
10 Person Table

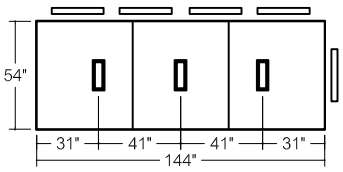

03R54X144
10 Person Table

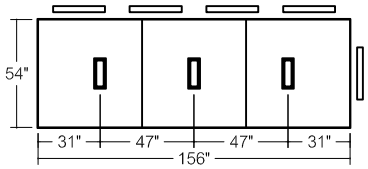

03R54X156
10 Person Table

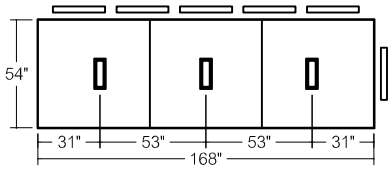

03R54X168
12 Person Table

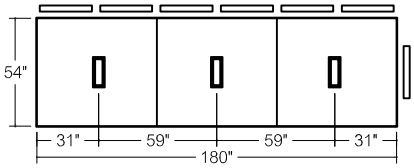

03R54X180
14 Person Table

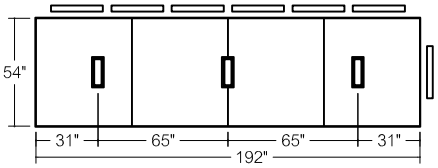

03R54X192
14 Person Table

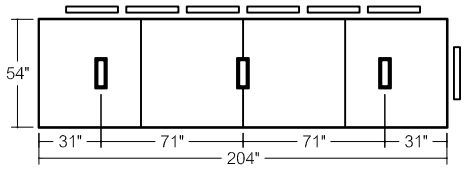

03R54X204
14 Person Table

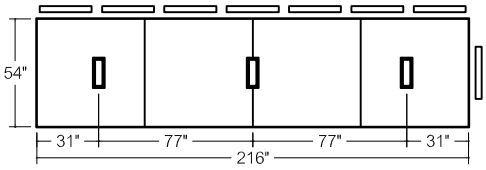

03R54X216
16 Person Table

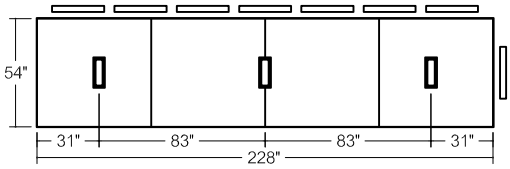

03R54X228
16 Person Table

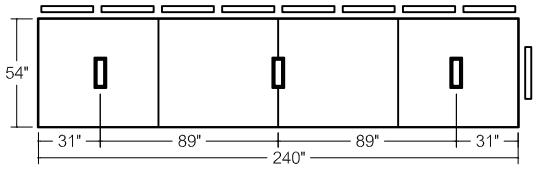

03R54X240
18 Person Table

Highline Fifty Rectangular Conference Table

54”x96”/ 6 Person
03R54X96

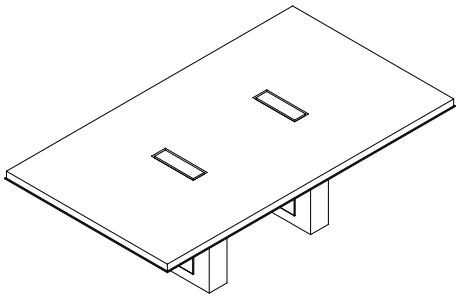

Starting Price: $16,580

54x96 table, slab veneer Tier 1 top, open painted base with no metal trim, powder coat finish

Pattern Number: 03R54X96

Step 1. Top Material

S	Slab (veneer only)
V	Veneer layered
G	Glass layered
C	Corian layered
Q	Caesarstone layered

Step 2. Base Options

ON	Open Base, no metal trim	+ 0
MC _ _	Open Base, MC metal trim	+3,872
PM01	Open Base, PM01 metal trim	+4,035
PM02	Open Base, PM02 metal trim	+4,035
PM03	Open Base, PM03 metal trim	+5,446

Step 3. Metal Edge Finish

MC _ _	Powder Coat	+0
PM01	Polished Chrome	+1,098
PM02	Satin Nickel	+497
PM03	Oil Rubbed Bronze	+879

Step 4A. Top Finish

T1 _ _	Veneer Tier 1	+0
T2 _ _	Veneer Tier 2	+828
GC _ _	Clear Glass, back painted	+3,564
GE _ _	Etched matte Glass, back painted	+4,284
CS01	Corian Glacier White	+5,220
QS _ _	Caesarstone	+13,500

Step 4B. Lower Layer Finish (Layer top only)

SL _ _	Satin Lacquer	+390
T _ _ _	Veneer Tier 1, 2, 3	+588
HG _ _	High Gloss Polyester	+648

Step 5. Base Finish

T1 _ _	Veneer Tier 1	+750
T2 _ _	Veneer Tier 2	+1,576
SL _ _	Satin Lacquer	+0
HG _ _	High Gloss Polyester	+3,438

Step 6. Power & Connectivity Access: Optional

DRHW	Drawer, Hardwired (layered edge only), Qty 4	+6,828
DRPI	Drawer, Plug In (layered edge only), Qty 4	+5,844
TMHW	Tabletop Metal lid, Hardwired, Qty 2	+7,492
TMPI	Tabletop Metal lid, Plug In, Qty 2	+6,382
TWHW	Tabletop Wood lid, Hardwired (veneer tops only), Qty 2	+6,866
TWPI	Tabletop Wood lid, Plug In (veneer tops only), Qty 2	+5,756
UMHW	Undermount, Hardwired, Qty 4	+4,076
UMPI	Undermount, Plug In, Qty 4	+2,964

Step 7. Microphone and/or Grommet Accommodations: Optional

MA _ _	Microphone hole (factory cut)	Qty _ _ x 321 each
GM _ _	2” Grommet hole (factory cut), liner, lid, in matching metal finish	Qty _ _ x 423 each

Please consult **page 7** for the palette of DatesWeiser finishes. Natural stone, non-standard glass and veneer, and other technology options are available. Please email **customerservice@datesweiser.com** for a custom quote. Consult technical information on **page 294** for construction details and technical information.

Highline Fifty Rectangular Conference Table

54”x108”/ 8 Person
03R54X108

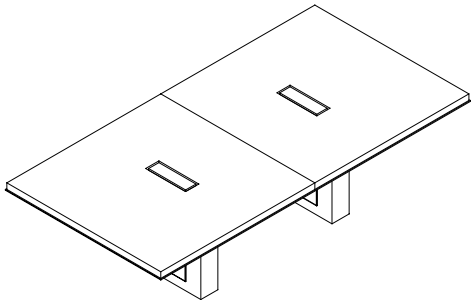

Starting Price: $18,021

54x208 table, slab veneer Tier 1 top, open painted base with no metal trim, powder coat finish

Pattern Number: 03R54X108

Step 1. Top Material	
S	Slab (veneer only)
V	Veneer layered
G	Glass layered
C	Corian layered
Q	Caesarstone layered

Step 2. Base Options		
ON	Open Base, no metal trim	+ 0
MC _ _	Open Base, MC metal trim	+3,872
PM01	Open Base, PM01 metal trim	+4,035
PM02	Open Base, PM02 metal trim	+4,035
PM03	Open Base, PM03 metal trim	+5,446

Step 3. Metal Edge Finish		
MC _ _	Powder Coat	+0
PM01	Polished Chrome	+1,098
PM02	Satin Nickel	+497
PM03	Oil Rubbed Bronze	+879

Step 4A. Top Finish		
T1 _ _	Veneer Tier 1	+0
T2 _ _	Veneer Tier 2	+932
GC _ _	Clear Glass, back painted	+4,010
GE _ _	Etched matte Glass, back painted	+4,820
CS01	Corian Glacier White	+5,873
QS _ _	Caesarstone	+15,188

Step 4B. Lower Layer Finish (Layer top only)		
SL _ _	Satin Lacquer	+427
T _ _ _	Veneer Tier 1, 2, 3	+651
HG _ _	High Gloss Polyester	+717

Step 5. Base Finish		
T1 _ _	Veneer Tier 1	+750
T2 _ _	Veneer Tier 2	+1,576
SL _ _	Satin Lacquer	+0
HG _ _	High Gloss Polyester	+3,438

Step 6. Power & Connectivity Access: Optional		
DRHW	Drawer, Hardwired (layered edge only), Qty 4	+6,828
DRPI	Drawer, Plug In (layered edge only), Qty 4	+5,844
TMHW	Tabletop Metal lid, Hardwired, Qty 2	+7,492
TMPI	Tabletop Metal lid, Plug In, Qty 2	+6,382
TWHW	Tabletop Wood lid, Hardwired (veneer tops only), Qty 2	+6,866
TWPI	Tabletop Wood lid, Plug In (veneer tops only), Qty 2	+5,756
UMHW	Undermount, Hardwired, Qty 2	+4,076
UMPI	Undermount, Plug In, Qty 2	+2,964

Step 7. Microphone and/or Grommet Accommodations: Optional		
MA _ _	Microphone hole (factory cut)	Qty _ _ x 321 each
GM _ _	2” Grommet hole (factory cut), liner, lid, in matching metal finish	Qty _ _ x 423 each

Please consult **page 7** for the palette of DatesWeiser finishes. Natural stone, non-standard glass and veneer, and other technology options are available. Please email **customerservice@datesweiser.com** for a custom quote. Consult technical information on **page 294** for construction details and technical information.

Highline Fifty Rectangular Conference Table

54”x120”/ 10 Person
03R54X120

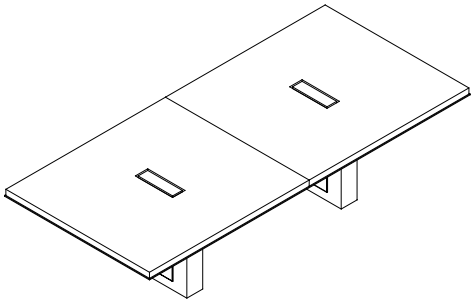

Starting Price: $18,970

54x120 table, slab veneer Tier 1 top, open painted base with no metal trim, powder coat finish

Pattern Number: 03R54X120

Step 1. Top Material		
S	Slab (veneer only)	
V	Veneer layered	
G	Glass layered	
C	Corian layered	
Q	Caesarstone layered	

Step 2. Base Options		
ON	Open Base, no metal trim	+ 0
MC _ _	Open Base, MC metal trim	+3,872
PM01	Open Base, PM01 metal trim	+4,035
PM02	Open Base, PM02 metal trim	+4,035
PM03	Open Base, PM03 metal trim	+5,446

Step 3. Metal Edge Finish		
MC _ _	Powder Coat	+0
PM01	Polished Chrome	+1098
PM02	Satin Nickel	+497
PM03	Oil Rubbed Bronze	+879

Step 4A. Top Finish		
T1 _ _	Veneer Tier 1	+0
T2 _ _	Veneer Tier 2	+1,035
GC _ _	Clear Glass, back painted	+4,455
GE _ _	Etched matte Glass, back painted	+5,355
CS01	Corian Glacier White	+6,525
QS _ _	Caesarstone	+16,875

Step 4B. Lower Layer Finish (Layer top only)		
SL _ _	Satin Lacquer	+557
T _ _ _	Veneer Tier 1, 2, 3	+744
HG _ _	High Gloss Polyester	+819

Step 5. Base Finish		
T1 _ _	Veneer Tier 1	+750
T2 _ _	Veneer Tier 2	+1,576
SL _ _	Satin Lacquer	+0
HG _ _	High Gloss Polyester	+3,438

Step 6. Power & Connectivity Access: Optional		
DRHW	Drawer, Hardwired (layered edge only), Qty 6	+10,242
DRPI	Drawer, Plug In (layered edge only), Qty 6	+8,766
TMHW	Tabletop Metal lid, Hardwired, Qty 2	+7,492
TMPI	Tabletop Metal lid, Plug In, Qty 2	+6,382
TWHW	Tabletop Wood lid, Hardwired (veneer tops only), Qty 2	+6,866
TWPI	Tabletop Wood lid, Plug In (veneer tops only), Qty 2	+5,756
UMHW	Undermount, Hardwired, Qty 6	+6,114
UMPI	Undermount, Plug In, Qty 6	+4,446

Step 7. Microphone and/or Grommet Accommodations: Optional		
MA _ _	Microphone hole (factory cut)	Qty _ _ x 321 each
GM _ _	2” Grommet hole (factory cut), liner, lid, in matching metal finish	Qty _ _ x 423 each

Please consult **page 7** for the palette of DatesWeiser finishes. Natural stone, non-standard glass and veneer, and other technology options are available. Please email **customerservice@datesweiser.com** for a custom quote. Consult technical information on **page 294** for construction details and technical information.

Highline Fifty Rectangular Conference Table

54”x132”/ 10 Person
03R54X132

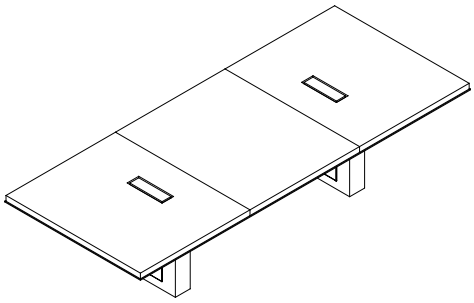

Starting Price: $23,775

54x132 table, slab veneer Tier 1 top, open painted base with no metal trim, powder coat finish

Pattern Number: 03R54X132

Step 1. Top Material

S	Slab (veneer only)
V	Veneer layered
G	Glass layered
C	Corian layered
Q	Caesarstone layered

Step 2. Base Options

ON	Open Base, no metal trim	+ 0
MC _ _	Open Base, MC metal trim	+3,872
PM01	Open Base, PM01 metal trim	+4,035
PM02	Open Base, PM02 metal trim	+4,035
PM03	Open Base, PM03 metal trim	+5,446

Step 3. Metal Edge Finish

MC _ _	Powder Coat	+0
PM01	Polished Chrome	+1,147
PM02	Satin Nickel	+432
PM03	Oil Rubbed Bronze	+779

Step 4A. Top Finish

T1 _ _	Veneer Tier 1	+0
T2 _ _	Veneer Tier 2	+1,139
GC _ _	Clear Glass, back painted	+4,900
GE _ _	Etched matte Glass, back painted	+5,890
CS01	Corian Glacier White	+7,177
QS _ _	Caesarstone	+18,562

Step 4B. Lower Layer Finish (Layer top only)

SL _ _	Satin Lacquer	+564
T _ _ _	Veneer Tier 1, 2, 3	+793
HG _ _	High Gloss Polyester	+872

Step 5. Base Finish

T1 _ _	Veneer Tier 1	+750
T2 _ _	Veneer Tier 2	+1,576
SL _ _	Satin Lacquer	+0
HG _ _	High Gloss Polyester	+3,438

Step 6. Power & Connectivity Access: Optional

DRHW	Drawer, Hardwired (layered edge only), Qty 6	+10,242
DRPI	Drawer, Plug In (layered edge only), Qty 6	+8,766
TMHW	Tabletop Metal lid, Hardwired, Qty 2	+7,492
TMPI	Tabletop Metal lid, Plug In, Qty 2	+6,382
TWHW	Tabletop Wood lid, Hardwired (veneer tops only), Qty 2	+6,866
TWPI	Tabletop Wood lid, Plug In (veneer tops only), Qty 2	+5,756
UMHW	Undermount, Hardwired, Qty 6	+6,114
UMPI	Undermount, Plug In, Qty 6	+4,446

Step 7. Microphone and/or Grommet Accommodations: Optional

MA _ _	Microphone hole (factory cut)	Qty _ _ x 321 each
GM _ _	2” Grommet hole (factory cut), liner, lid, in matching metal finish	Qty _ _ x 423 each

Please consult **page 7** for the palette of DatesWeiser finishes. Natural stone, non-standard glass and veneer, and other technology options are available. Please email **customerservice@datesweiser.com** for a custom quote. Consult technical information on **page 294** for construction details and technical information.

Highline Fifty Rectangular Conference Table

54”x144”/ 10 Person
03R54X144

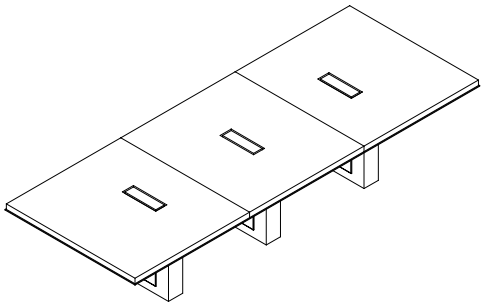

Starting Price: $24,959

54x144 table, slab veneer Tier 1 top, open painted base with no metal trim, powder coat finish

Pattern Number: 03R54X144

Step 1. Top Material	
S	Slab (veneer only)
V	Veneer layered
G	Glass layered
C	Corian layered
Q	Caesarstone layered

Step 2. Base Options		
ON	Open Base, no metal trim	+ 0
MC _ _	Open Base, MC metal trim	+5,808
PM01	Open Base, PM01 metal trim	+6,053
PM02	Open Base, PM02 metal trim	+6,053
PM03	Open Base, PM03 metal trim	+8,169

Step 3. Metal Edge Finish		
MC _ _	Powder Coat	+0
PM01	Polished Chrome	+1,147
PM02	Satin Nickel	+432
PM03	Oil Rubbed Bronze	+779

Step 4A. Top Finish		
T1 _ _	Veneer Tier 1	+0
T2 _ _	Veneer Tier 2	+1,242
GC _ _	Clear Glass, back painted	+5,346
GE _ _	Etched matte Glass, back painted	+6,426
CS01	Corian Glacier White	+7,830
QS _ _	Caesarstone	+20,250

Step 4B. Lower Layer Finish (Layer top only)		
SL _ _	Satin Lacquer	+577
T _ _ _	Veneer Tier 1, 2, 3	+844
HG _ _	High Gloss Polyester	+928

Step 5. Base Finish		
T1 _ _	Veneer Tier 1	+1,125
T2 _ _	Veneer Tier 2	+2,364
SL _ _	Satin Lacquer	+0
HG _ _	High Gloss Polyester	+5,157

Step 6. Power & Connectivity Access: Optional		
DRHW	Drawer, Hardwired (layered edge only), Qty 6	+10,242
DRPI	Drawer, Plug In (layered edge only), Qty 6	+8,766
TMHW	Tabletop Metal lid, Hardwired, Qty 3	+11,238
TMPI	Tabletop Metal lid, Plug In, Qty 3	+9,573
TWHW	Tabletop Wood lid, Hardwired (veneer tops only), Qty 3	+10,299
TWPI	Tabletop Wood lid, Plug In (veneer tops only), Qty 3	+8,634
UMHW	Undermount, Hardwired, Qty 6	+6,114
UMPI	Undermount, Plug In, Qty 6	+4,446

Step 7. Microphone and/or Grommet Accommodations: Optional		
MA _ _	Microphone hole (factory cut)	Qty _ _ x 321 each
GM _ _	2” Grommet hole (factory cut), liner, lid, in matching metal finish	Qty _ _ x 423 each

Please consult **page 7** for the palette of DatesWeiser finishes. Natural stone, non-standard glass and veneer, and other technology options are available. Please email **customerservice@datesweiser.com** for a custom quote. Consult technical information on **page 294** for construction details and technical information.

Highline Fifty Rectangular Conference Table

54”x156”/ 10 Person
03R54X156

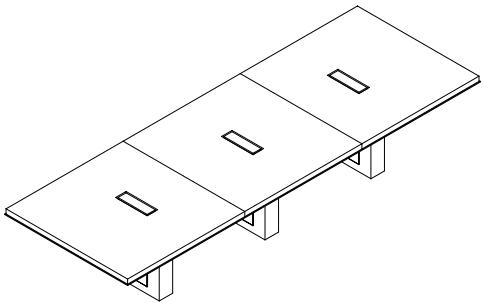

Starting Price: $25,748

54x156 table, slab veneer Tier 1 top, open painted base with no metal trim, powder coat finish

Pattern Number: 03R54X156

Step 1. Top Material

S	Slab (veneer only)
V	Veneer layered
G	Glass layered
C	Corian layered
Q	Caesarstone layered

Step 2. Base Options

ON	Open Base, no metal trim	+ 0
MC _ _	Open Base, MC metal trim	+5,808
PM01	Open Base, PM01 metal trim	+6,053
PM02	Open Base, PM02 metal trim	+6,053
PM03	Open Base, PM03 metal trim	+8,169

Step 3. Metal Edge Finish

MC _ _	Powder Coat	+0
PM01	Polished Chrome	+1,147
PM02	Satin Nickel	+432
PM03	Oil Rubbed Bronze	+779

Step 4A. Top Finish

T1 _ _	Veneer Tier 1	+0
T2 _ _	Veneer Tier 2	+1,345
GC _ _	Clear Glass, back painted	+5,791
GE _ _	Etched matte Glass, back painted	+6,961
CS01	Corian Glacier White	+8,842
QS _ _	Caesarstone	+21,938

Step 4B. Lower Layer Finish (Layer top only)

SL _ _	Satin Lacquer	+595
T _ _ _	Veneer Tier 1, 2, 3	+850
HG _ _	High Gloss Polyester	+934

Step 5. Base Finish

T1 _ _	Veneer Tier 1	+1,125
T2 _ _	Veneer Tier 2	+2,364
SL _ _	Satin Lacquer	+0
HG _ _	High Gloss Polyester	+5,157

Step 6. Power & Connectivity Access: Optional

DRHW	Drawer, Hardwired (layered edge only), Qty 6	+10,242
DRPI	Drawer, Plug In (layered edge only), Qty 6	+8,766
TMHW	Tabletop Metal lid, Hardwired, Qty 3	+11,238
TMPI	Tabletop Metal lid, Plug In, Qty 3	+9,573
TWHW	Tabletop Wood lid, Hardwired (veneer tops only), Qty 3	+10,299
TWPI	Tabletop Wood lid, Plug In (veneer tops only), Qty 3	+8,634
UMHW	Undermount, Hardwired, Qty 6	+6,114
UMPI	Undermount, Plug In, Qty 6	+4,446

Step 7. Microphone and/or Grommet Accommodations: Optional

MA _ _	Microphone hole (factory cut)	Qty _ _ x 321 each
GM _ _	2” Grommet hole (factory cut), liner, lid, in matching metal finish	Qty _ _ x 423 each

Please consult **page 7** for the palette of DatesWeiser finishes. Natural stone, non-standard glass and veneer, and other technology options are available. Please email **customerservice@datesweiser.com** for a custom quote. Consult technical information on **page 294** for construction details and technical information.

Highline Fifty Rectangular Conference Table

54”x168”/ 12 Person
03R54X168

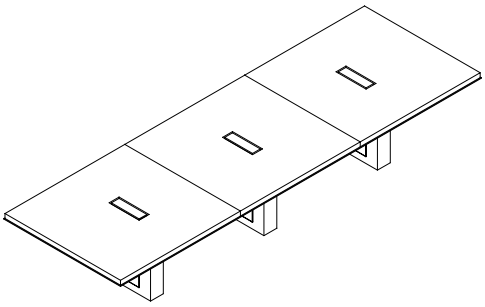

Starting Price: $27,128

54x168 table, slab veneer Tier 1 top, open painted base with no metal trim, powder coat finish

Pattern Number: 03R54X168

Step 1. Top Material

S	Slab (veneer only)
V	Veneer layered
G	Glass layered
C	Corian layered
Q	Caesarstone layered

Step 2. Base Options

ON	Open Base, no metal trim	+ 0
MC _ _	Open Base, MC metal trim	+5,808
PM01	Open Base, PM01 metal trim	+6,053
PM02	Open Base, PM02 metal trim	+6,053
PM03	Open Base, PM03 metal trim	+8,169

Step 3. Metal Edge Finish

MC _ _	Powder Coat	+0
PM01	Polished Chrome	+1,882
PM02	Satin Nickel	+628
PM03	Oil Rubbed Bronze	+984

Step 4A. Top Finish

T1 _ _	Veneer Tier 1	+0
T2 _ _	Veneer Tier 2	+1,449
GC _ _	Clear Glass, back painted	+6,237
GE _ _	Etched matte Glass, back painted	+7,497
CS01	Corian Glacier White	+9,135
QS _ _	Caesarstone	+23,625

Step 4B. Lower Layer Finish (Layer top only)

SL _ _	Satin Lacquer	+651
T _ _ _	Veneer Tier 1, 2, 3	+935
HG _ _	High Gloss Polyester	+1,029

Step 5. Base Finish

T1 _ _	Veneer Tier 1	+1,125
T2 _ _	Veneer Tier 2	+2,364
SL _ _	Satin Lacquer	+0
HG _ _	High Gloss Polyester	+5,157

Step 6. Power & Connectivity Access: Optional

DRHW	Drawer, Hardwired (layered edge only), Qty 6	+10,242
DRPI	Drawer, Plug In (layered edge only), Qty 6	+8,766
TMHW	Tabletop Metal lid, Hardwired, Qty 3	+11,238
TMPI	Tabletop Metal lid, Plug In, Qty 3	+9,573
TWHW	Tabletop Wood lid, Hardwired (veneer tops only), Qty 3	+10,299
TWPI	Tabletop Wood lid, Plug In (veneer tops only), Qty 3	+8,634
UMHW	Undermount, Hardwired, Qty 6	+6,114
UMPI	Undermount, Plug In, Qty 6	+4,446

Step 7. Microphone and/or Grommet Accommodations: Optional

MA _ _	Microphone hole (factory cut)	Qty _ _ x 321 each
GM _ _	2” Grommet hole (factory cut), liner, lid, in matching metal finish	Qty _ _ x 423 each

Please consult **page 7** for the palette of DatesWeiser finishes. Natural stone, non-standard glass and veneer, and other technology options are available. Please email **customerservice@datesweiser.com** for a custom quote. Consult technical information on **page 294** for construction details and technical information.

Highline Fifty Rectangular Conference Table

54”x180”/ 14 Person
03R54X180

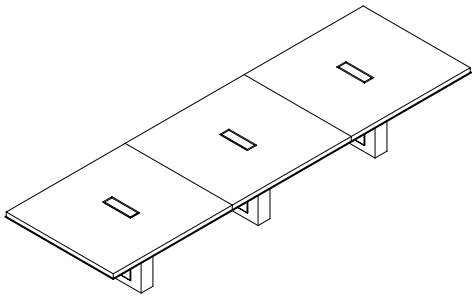

Starting Price: $27,987

54x180 table, slab veneer Tier 1 top, open painted base with no metal trim, powder coat finish

Pattern Number: 03R54X180

Step 1. Top Material

S	Slab (veneer only)
V	Veneer layered
G	Glass layered
C	Corian layered
Q	Caesarstone layered

Step 2. Base Options

ON	Open Base, no metal trim	+ 0
MC _ _	Open Base, MC metal trim	+5,808
PM01	Open Base, PM01 metal trim	+6,053
PM02	Open Base, PM02 metal trim	+6,053
PM03	Open Base, PM03 metal trim	+8,169

Step 3. Metal Edge Finish

MC _ _	Powder Coat	+0
PM01	Polished Chrome	+1,882
PM02	Satin Nickel	+628
PM03	Oil Rubbed Bronze	+984

Step 4A. Top Finish

T1 _ _	Veneer Tier 1	+0
T2 _ _	Veneer Tier 2	+1,543
GC _ _	Clear Glass, back painted	+6,673
GE _ _	Etched matte Glass, back painted	+8,023
CS01	Corian Glacier White	+9,778
QS _ _	Caesarstone	+25,304

Step 4B. Lower Layer Finish (Layer top only)

SL _ _	Satin Lacquer	+668
T _ _ _	Veneer Tier 1, 2, 3	+1,035
HG _ _	High Gloss Polyester	+1,138

Step 5. Base Finish

T1 _ _	Veneer Tier 1	+1,125
T2 _ _	Veneer Tier 2	+2,364
SL _ _	Satin Lacquer	+0
HG _ _	High Gloss Polyester	+5,157

Step 6. Power & Connectivity Access: Optional

DRHW	Drawer, Hardwired (layered edge only), Qty 8	+13,656
DRPI	Drawer, Plug In (layered edge only), Qty 8	+11,688
TMHW	Tabletop Metal lid, Hardwired, Qty 3	+11,238
TMPI	Tabletop Metal lid, Plug In, Qty 3	+9,573
TWHW	Tabletop Wood lid, Hardwired (veneer tops only), Qty 3	+10,299
TWPI	Tabletop Wood lid, Plug In (veneer tops only), Qty 3	+8,634
UMHW	Undermount, Hardwired, Qty 8	+8,152
UMPI	Undermount, Plug In, Qty 8	+5,928

Step 7. Microphone and/or Grommet Accommodations: Optional

MA _ _	Microphone hole (factory cut)	Qty _ _ x 321 each
GM _ _	2” Grommet hole (factory cut), liner, lid, in matching metal finish	Qty _ _ x 423 each

Please consult **page 7** for the palette of DatesWeiser finishes. Natural stone, non-standard glass and veneer, and other technology options are available. Please email **customerservice@datesweiser.com** for a custom quote. Consult technical information on **page 294** for construction details and technical information.

Highline Fifty Rectangular Conference Table

54”x192”/ 14 Person
03R54X192

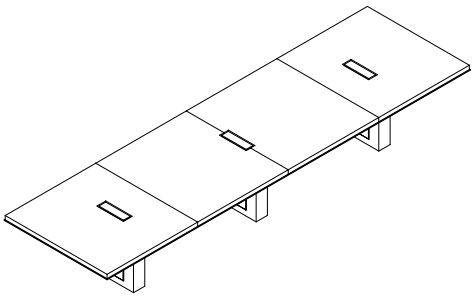

Starting Price: $32,332

54x192 table, slab veneer Tier 1 top, open painted base with no metal trim, powder coat finish

Pattern Number: 03R54X192

Step 1. Top Material

S	Slab (veneer only)
V	Veneer layered
G	Glass layered
C	Corian layered
Q	Caesarstone layered

Step 2. Base Options

ON	Open Base, no metal trim	+ 0
MC _ _	Open Base, MC metal trim	+5,808
PM01	Open Base, PM01 metal trim	+6,053
PM02	Open Base, PM02 metal trim	+6,053
PM03	Open Base, PM03 metal trim	+8,169

Step 3. Metal Edge Finish

MC _ _	Powder Coat	+0
PM01	Polished Chrome	+1,882
PM02	Satin Nickel	+628
PM03	Oil Rubbed Bronze	+984

Step 4A. Top Finish

T1 _ _	Veneer Tier 1	+0
T2 _ _	Veneer Tier 2	+1,656
GC _ _	Clear Glass, back painted	+7,128
GE _ _	Etched matte Glass, back painted	+8,568
CS01	Corian Glacier White	+10,441
QS _ _	Caesarstone	+27,000

Step 4B. Lower Layer Finish (Layer top only)

SL _ _	Satin Lacquer	+751
T _ _ _	Veneer Tier 1, 2, 3	+1,060
HG _ _	High Gloss Polyester	+1,166

Step 5. Base Finish

T1 _ _	Veneer Tier 1	+1,125
T2 _ _	Veneer Tier 2	+2,364
SL _ _	Satin Lacquer	+0
HG _ _	High Gloss Polyester	+5,157

Step 6. Power & Connectivity Access: Optional

DRHW	Drawer, Hardwired (layered edge only), Qty 8	+13,656
DRPI	Drawer, Plug In (layered edge only), Qty 8	+11,688
TMHW	Tabletop Metal lid, Hardwired, Qty 3	+11,238
TMPI	Tabletop Metal lid, Plug In, Qty 3	+9,573
TWHW	Tabletop Wood lid, Hardwired (veneer tops only), Qty 3	+10,299
TWPI	Tabletop Wood lid, Plug In (veneer tops only), Qty 3	+8,634
UMHW	Undermount, Hardwired, Qty 8	+8,152
UMPI	Undermount, Plug In, Qty 8	+5,928

Step 7. Microphone and/or Grommet Accommodations: Optional

MA _ _	Microphone hole (factory cut)	Qty _ _ x 321 each
GM _ _	2” Grommet hole (factory cut), liner, lid, in matching metal finish	Qty _ _ x 423 each

Please consult **page 7** for the palette of DatesWeiser finishes. Natural stone, non-standard glass and veneer, and other technology options are available. Please email **customerservice@datesweiser.com** for a custom quote. Consult technical information on **page 294** for construction details and technical information.

Highline Fifty Rectangular Conference Table

54”x204”/ 14 Person
03R54X204

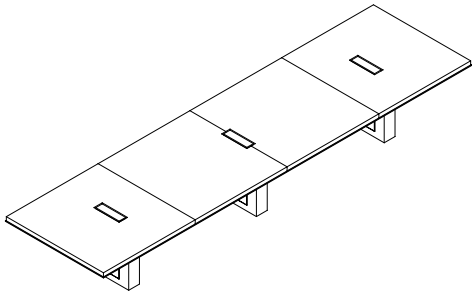

Starting Price: $33,214

54x204 table, slab veneer Tier 1 top, open painted base with no metal trim, powder coat finish

Pattern Number: 03R54X204

Step 1. Top Material	
S	Slab (veneer only)
V	Veneer layered
G	Glass layered
C	Corian layered
Q	Caesarstone layered

Step 2. Base Options		
ON	Open Base, no metal trim	+ 0
MC _ _	Open Base, MC metal trim	+5,808
PM01	Open Base, PM01 metal trim	+6,053
PM02	Open Base, PM02 metal trim	+6,053
PM03	Open Base, PM03 metal trim	+8,169

Step 3. Metal Edge Finish		
MC _ _	Powder Coat	+0
PM01	Polished Chrome	+1,882
PM02	Satin Nickel	+628
PM03	Oil Rubbed Bronze	+984

Step 4A. Top Finish		
T1 _ _	Veneer Tier 1	+0
T2 _ _	Veneer Tier 2	+1,760
GC _ _	Clear Glass, back painted	+7,574
GE _ _	Etched matte Glass, back painted	+9,104
CS01	Corian Glacier White	+11,093
QS _ _	Caesarstone	+28,687

Step 4B. Lower Layer Finish (Layer top only)		
SL _ _	Satin Lacquer	+787
T _ _ _	Veneer Tier 1, 2, 3	+1,117
HG _ _	High Gloss Polyester	+1,228

Step 5. Base Finish		
T1 _ _	Veneer Tier 1	+1,125
T2 _ _	Veneer Tier 2	+2,364
SL _ _	Satin Lacquer	+0
HG _ _	High Gloss Polyester	+5,157

Step 6. Power & Connectivity Access: Optional		
DRHW	Drawer, Hardwired (layered edge only), Qty 8	+13,656
DRPI	Drawer, Plug In (layered edge only), Qty 8	+11,688
TMHW	Tabletop Metal lid, Hardwired, Qty 3	+11,238
TMPI	Tabletop Metal lid, Plug In, Qty 3	+9,573
TWHW	Tabletop Wood lid, Hardwired (veneer tops only), Qty 3	+10,299
TWPI	Tabletop Wood lid, Plug In (veneer tops only), Qty 3	+8,634
UMHW	Undermount, Hardwired, Qty 8	+8,152
UMPI	Undermount, Plug In, Qty 8	+5,928

Step 7. Microphone and/or Grommet Accommodations: Optional		
MA _ _	Microphone hole (factory cut)	Qty _ _ x 321 each
GM _ _	2” Grommet hole (factory cut), liner, lid, in matching metal finish	Qty _ _ x 423 each

Please consult **page 7** for the palette of DatesWeiser finishes. Natural stone, non-standard glass and veneer, and other technology options are available. Please email **customerservice@datesweiser.com** for a custom quote. Consult technical information on **page 294** for construction details and technical information.

Highline Fifty Rectangular Conference Table

54”x216”/ 16 Person
03R54X216

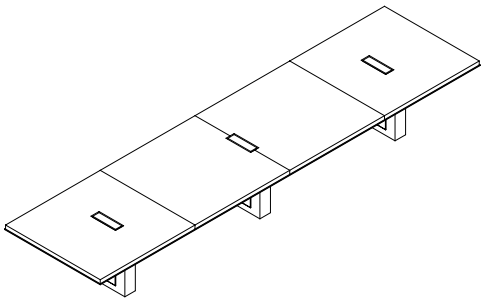

Starting Price: $34,085

54x216 table, slab veneer Tier 1 top, open painted base with no metal trim, powder coat finish

Pattern Number: 03R54X216

Step 1. Top Material

S	Slab (veneer only)
V	Veneer layered
G	Glass layered
C	Corian layered
Q	Caesarstone layered

Step 2. Base Options

ON	Open Base, no metal trim	+ 0
MC _ _	Open Base, MC metal trim	+5,808
PM01	Open Base, PM01 metal trim	+6,053
PM02	Open Base, PM02 metal trim	+6,053
PM03	Open Base, PM03 metal trim	+8,169

Step 3. Metal Edge Finish

MC _ _	Powder Coat	+0
PM01	Polished Chrome	+1,882
PM02	Satin Nickel	+628
PM03	Oil Rubbed Bronze	+984

Step 4A. Top Finish

T1 _ _	Veneer Tier 1	+0
T2 _ _	Veneer Tier 2	+1,863
GC _ _	Clear Glass, back painted	+8,019
GE _ _	Etched matte Glass, back painted	+9,639
CS01	Corian Glacier White	+11,745
QS _ _	Caesarstone	+30,375

Step 4B. Lower Layer Finish (Layer top only)

SL _ _	Satin Lacquer	+824
T _ _ _	Veneer Tier 1, 2, 3	+1,178
HG _ _	High Gloss Polyester	+1,296

Step 5. Base Finish

T1 _ _	Veneer Tier 1	+1,125
T2 _ _	Veneer Tier 2	+2,364
SL _ _	Satin Lacquer	+0
HG _ _	High Gloss Polyester	+5,157

Step 6. Power & Connectivity Access: Optional

DRHW	Drawer, Hardwired (layered edge only), Qty 8	+13,656
DRPI	Drawer, Plug In (layered edge only), Qty 8	+11,688
TMHW	Tabletop Metal lid, Hardwired, Qty 3	+11,238
TMPI	Tabletop Metal lid, Plug In, Qty 3	+9,573
TWHW	Tabletop Wood lid, Hardwired (veneer tops only), Qty 3	+10,299
TWPI	Tabletop Wood lid, Plug In (veneer tops only), Qty 3	+8,634
UMHW	Undermount, Hardwired, Qty 8	+8,152
UMPI	Undermount, Plug In, Qty 8	+5,928

Step 7. Microphone and/or Grommet Accommodations: Optional

MA _ _	Microphone hole (factory cut)	Qty _ _ x 321 each
GM _ _	2” Grommet hole (factory cut), liner, lid, in matching metal finish	Qty _ _ x 423 each

Please consult **page 7** for the palette of DatesWeiser finishes. Natural stone, non-standard glass and veneer, and other technology options are available. Please email **customerservice@datesweiser.com** for a custom quote. Consult technical information on **page 294** for construction details and technical information.

Highline Fifty Rectangular Conference Table

54”x228”/ 16 Person
03R54X228

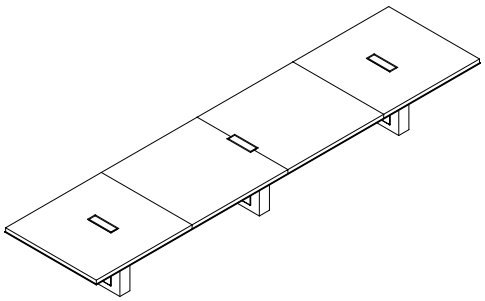

Starting Price: $34,990

54x228 table, slab veneer Tier 1 top, open painted base with no metal trim, powder coat finish

Pattern Number: 03R54X228

Step 1. Top Material

S	Slab (veneer only)
V	Veneer layered
G	Glass layered
C	Corian layered
Q	Caesarstone layered

Step 2. Base Options

ON	Open Base, no metal trim	+ 0
MC _ _	Open Base, MC metal trim	+5,808
PM01	Open Base, PM01 metal trim	+6,053
PM02	Open Base, PM02 metal trim	+6,053
PM03	Open Base, PM03 metal trim	+8,169

Step 3. Metal Edge Finish

MC _ _	Powder Coat	+0
PM01	Polished Chrome	+1,882
PM02	Satin Nickel	+628
PM03	Oil Rubbed Bronze	+984

Step 4A. Top Finish

T1 _ _	Veneer Tier 1	+0
T2 _ _	Veneer Tier 2	+1,966
GC _ _	Clear Glass, back painted	+8,465
GE _ _	Etched matte Glass, back painted	+10,175
CS01	Corian Glacier White	+12,397
QS _ _	Caesarstone	+32,063

Step 4B. Lower Layer Finish (Layer top only)

SL _ _	Satin Lacquer	+836
T _ _ _	Veneer Tier 1, 2, 3	+1,240
HG _ _	High Gloss Polyester	+1,365

Step 5. Base Finish

T1 _ _	Veneer Tier 1	+1,125
T2 _ _	Veneer Tier 2	+2,364
SL _ _	Satin Lacquer	+0
HG _ _	High Gloss Polyester	+5,157

Step 6. Power & Connectivity Access: Optional

DRHW	Drawer, Hardwired (layered edge only), Qty 8	+13,656
DRPI	Drawer, Plug In (layered edge only), Qty 8	+11,688
TMHW	Tabletop Metal lid, Hardwired, Qty 3	+11,238
TMPI	Tabletop Metal lid, Plug In, Qty 3	+9,573
TWHW	Tabletop Wood lid, Hardwired (veneer tops only), Qty 3	+10,299
TWPI	Tabletop Wood lid, Plug In (veneer tops only), Qty 3	+8,634
UMHW	Undermount, Hardwired, Qty 8	+8,152
UMPI	Undermount, Plug In, Qty 8	+5,928

Step 7. Microphone and/or Grommet Accommodations: Optional

MA _ _	Microphone hole (factory cut)	Qty _ _ x 321 each
GM _ _	2” Grommet hole (factory cut), liner, lid, in matching metal finish	Qty _ _ x 423 each

Please consult **page 7** for the palette of DatesWeiser finishes. Natural stone, non-standard glass and veneer, and other technology options are available. Please email **customerservice@datesweiser.com** for a custom quote. Consult technical information on **page 294** for construction details and technical information.

Highline Fifty Rectangular Conference Table

54”x240”/ 18 Person
03R54X240

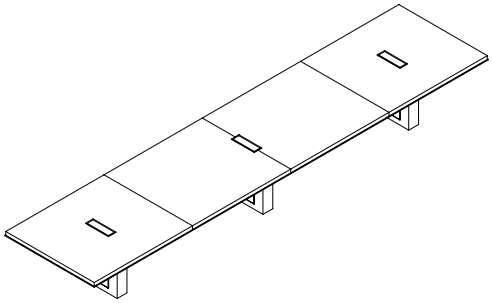

Starting Price: $35,850

54x240 table, slab veneer Tier 1 top, open painted base with no metal trim, powder coat finish

Pattern Number: 03R54X240

Step 1. Top Material

S	Slab (veneer only)
V	Veneer layered
G	Glass layered
C	Corian layered
Q	Caesarstone layered

Step 2. Base Options

ON	Open Base, no metal trim	+ 0
MC _ _	Open Base, MC metal trim	+5,808
PM01	Open Base, PM01 metal trim	+6,053
PM02	Open Base, PM02 metal trim	+6,053
PM03	Open Base, PM03 metal trim	+8,169

Step 3. Metal Edge Finish

MC _ _	Powder Coat	+0
PM01	Polished Chrome	+1,882
PM02	Satin Nickel	+628
PM03	Oil Rubbed Bronze	+984

Step 4A. Top Finish

T1 _ _	Veneer Tier 1	+0
T2 _ _	Veneer Tier 2	+2,070
GC _ _	Clear Glass, back painted	+8,910
GE _ _	Etched matte Glass, back painted	+10,710
CS01	Corian Glacier White	+13,050
QS _ _	Caesarstone	+33,750

Step 4B. Lower Layer Finish (Layer top only)

SL _ _	Satin Lacquer	+881
T _ _ _	Veneer Tier 1, 2, 3	+1,333
HG _ _	High Gloss Polyester	+1,466

Step 5. Base Finish

T1 _ _	Veneer Tier 1	+1,125
T2 _ _	Veneer Tier 2	+2,364
SL _ _	Satin Lacquer	+0
HG _ _	High Gloss Polyester	+5,157

Step 6. Power & Connectivity Access: Optional

DRHW	Drawer, Hardwired (layered edge only), Qty 10	+17,070
DRPI	Drawer, Plug In (layered edge only), Qty 10	+14,610
TMHW	Tabletop Metal lid, Hardwired, Qty 3	+11,238
TMPI	Tabletop Metal lid, Plug In, Qty 3	+9,573
TWHW	Tabletop Wood lid, Hardwired (veneer tops only), Qty 3	+10,299
TWPI	Tabletop Wood lid, Plug In (veneer tops only), Qty 3	+8,634
UMHW	Undermount, Hardwired, Qty 10	+10,190
UMPI	Undermount, Plug In, Qty 10	+7,410

Step 7. Microphone and/or Grommet Accommodations: Optional

MA _ _	Microphone hole (factory cut)	Qty _ _ x 321 each
GM _ _	2” Grommet hole (factory cut), liner, lid, in matching metal finish	Qty _ _ x 423 each

Please consult **page 7** for the palette of DatesWeiser finishes. Natural stone, non-standard glass and veneer, and other technology options are available. Please email **customerservice@datesweiser.com** for a custom quote. Consult technical information on **page 294** for construction details and technical information.

Highline Fifty Conference Tables Index

60″ width

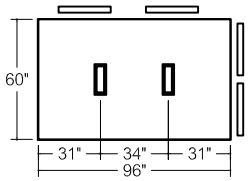

03R60X96
8 Person Table

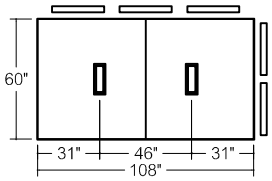

03R60X108
10 Person Table

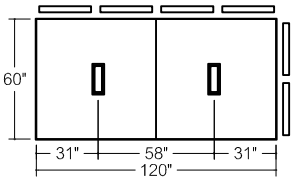

03R60X120
12 Person Table

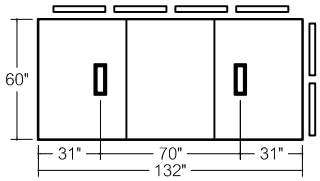

03R60X132
12 Person Table

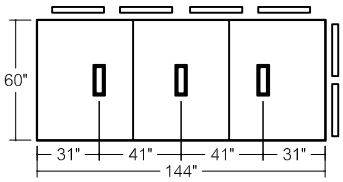

03R60X144
12 Person Table

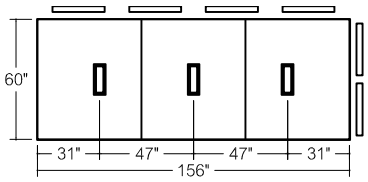

03R60X156
12 Person Table

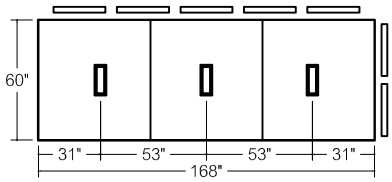

03R60X168
14 Person Table

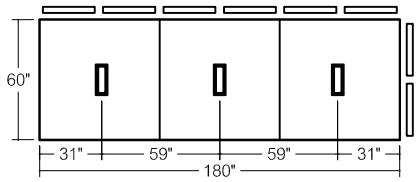

03R60X180
16 Person Table

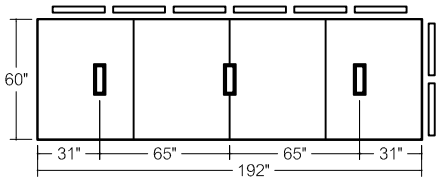

03R60X192
16 Person Table

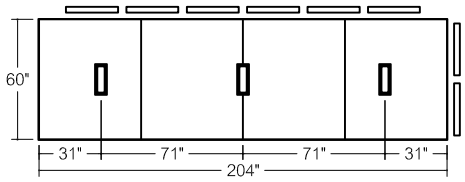

03R60X204
16 Person Table

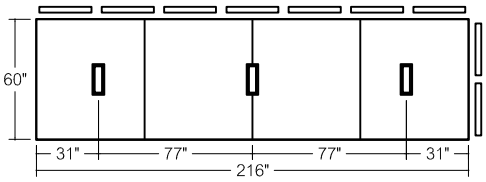

03R60X216
18 Person Table

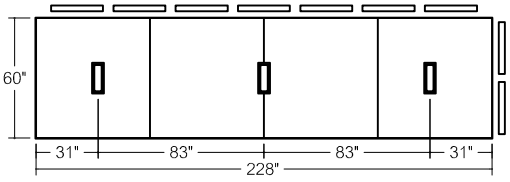

03R60X228
18 Person Table

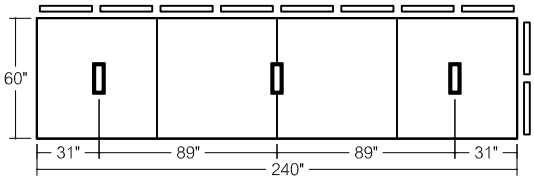

03R60X240
20 Person Table

Highline Fifty Rectangular Conference Table

60”x96”/ 8 Person
03R60X96

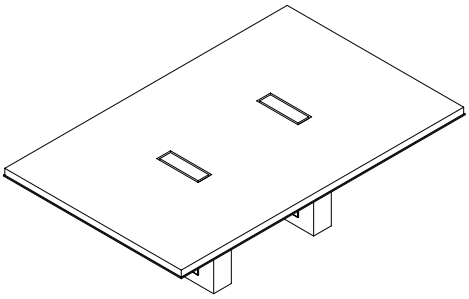

Starting Price: $17,195

60x96 table, slab veneer Tier 1 top, open painted base with no metal trim, powder coat finish

Pattern Number: 03R60X96

Step 1. Top Material

S	Slab (veneer only)
V	Veneer layered
G	Glass layered
C	Corian layered
Q	Caesarstone layered

Step 2. Base Options

ON	Open Base, no metal trim	+ 0
MC _ _	Open Base, MC metal trim	+3,872
PM01	Open Base, PM01 metal trim	+4,035
PM02	Open Base, PM02 metal trim	+4,035
PM03	Open Base, PM03 metal trim	+5,446

Step 3. Metal Edge Finish

MC _ _	Powder Coat	+0
PM01	Polished Chrome	+1,098
PM02	Satin Nickel	+497
PM03	Oil Rubbed Bronze	+879

Step 4A. Top Finish

T1 _ _	Veneer Tier 1	+0
T2 _ _	Veneer Tier 2	+920
GC _ _	Clear Glass, back painted	+3,960
GE _ _	Etched matte Glass, back painted	+4,760
CS01	Corian Glacier White	+5,800
QS _ _	Caesarstone	+15,000

Step 4B. Lower Layer Finish (Layer top only)

SL _ _	Satin Lacquer	+386
T _ _ _	Veneer Tier 1, 2, 3	+600
HG _ _	High Gloss Polyester	+661

Step 5. Base Finish

T1 _ _	Veneer Tier 1	+838
T2 _ _	Veneer Tier 2	+2,006
SL _ _	Satin Lacquer	+0
HG _ _	High Gloss Polyester	+3,868

Step 6. Power & Connectivity Access: Optional

DRHW	Drawer, Hardwired (layered edge only), Qty 4	+6,828
DRPI	Drawer, Plug In (layered edge only), Qty 4	+5,844
TMHW	Tabletop Metal lid, Hardwired, Qty 2	+9,514
TMPI	Tabletop Metal lid, Plug In, Qty 2	+8,402
TWHW	Tabletop Wood lid, Hardwired (veneer tops only), Qty 2	+8,452
TWPI	Tabletop Wood lid, Plug In (veneer tops only),Qty 2	+7,300
UMHW	Undermount, Hardwired, Qty 4	+4,076
UMPI	Undermount, Plug In, Qty 4	+2,964

Step 7. Microphone and/or Grommet Accommodations: Optional

MA _ _	Microphone hole (factory cut)	Qty _ _ x 321 each
GM _ _	2” Grommet Hole (factory cut), liner, lid, in matching metal finish	Qty _ _ x 423 each

Please consult **page 7** for the palette of DatesWeiser finishes. Natural stone, non-standard glass and veneer, and other technology options are available. Please email **customerservice@datesweiser.com** for a custom quote. Consult technical information on **page 294** for construction details and technical information.

Highline Fifty Rectangular Conference Table

60”x108”/ 10 Person
03R60X108

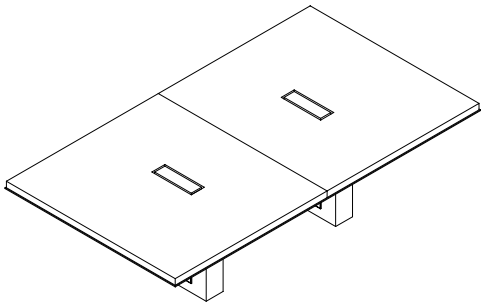

Starting Price: $18,141

60x108 table, slab veneer Tier 1 top, open painted base with no metal trim, powder coat finish

Pattern Number: 03R60X108

Step 1. Top Material

S	Slab (veneer only)
V	Veneer layered
G	Glass layered
C	Corian layered
Q	Caesarstone layered

Step 2. Base Options

ON	Open Base, no metal trim	+ 0
MC _ _	Open Base, MC metal trim	+3,872
PM01	Open Base, PM01 metal trim	+4,035
PM02	Open Base, PM02 metal trim	+4,035
PM03	Open Base, PM03 metal trim	+5,446

Step 3. Metal Edge Finish

MC _ _	Powder Coat	+0
PM01	Polished Chrome	+1,098
PM02	Satin Nickel	+497
PM03	Oil Rubbed Bronze	+879

Step 4A. Top Finish

T1 _ _	Veneer Tier 1	+0
T2 _ _	Veneer Tier 2	+1,035
GC _ _	Clear Glass, back painted	+5,355
GE _ _	Etched matte Glass, back painted	+4,455
CS01	Corian Glacier White	+6,525
QS _ _	Caesarstone	+16,875

Step 4B. Lower Layer Finish (Layer top only)

SL _ _	Satin Lacquer	+457
T _ _ _	Veneer Tier 1, 2, 3	+694
HG _ _	High Gloss Polyester	+764

Step 5. Base Finish

T1 _ _	Veneer Tier 1	+838
T2 _ _	Veneer Tier 2	+2,006
SL _ _	Satin Lacquer	+0
HG _ _	High Gloss Polyester	+3,868

Step 6. Power & Connectivity Access: Optional

DRHW	Drawer, Hardwired (layered edge only), Qty 4	+6,828
DRPI	Drawer, Plug In (layered edge only), Qty 4	+5,844
TMHW	Tabletop Metal lid, Hardwired, Qty 2	+9,514
TMPI	Tabletop Metal lid, Plug In, Qty 2	+8,402
TWHW	Tabletop Wood lid, Hardwired (veneer tops only), Qty 2	+8,452
TWPI	Tabletop Wood lid, Plug In (veneer tops only), Qty 2	+7,300
UMHW	Undermount, Hardwired, Qty 4	+ 4,076
UMPI	Undermount, Plug In, Qty 4	+2,964

Step 7. Microphone and/or Grommet Accommodations: Optional

MA _ _	Microphone hole (factory cut)	Qty _ _ x 321 each
GM _ _	2” Grommet Hole (factory cut), liner, lid, in matching metal finish	Qty _ _ x 423 each

Please consult **page 7** for the palette of DatesWeiser finishes. Natural stone, non-standard glass and veneer, and other technology options are available. Please email **customerservice@datesweiser.com** for a custom quote. Consult technical information on **page 294** for construction details and technical information.

Highline Fifty Rectangular Conference Table

60”x120”/ 12 Person
03R60X120

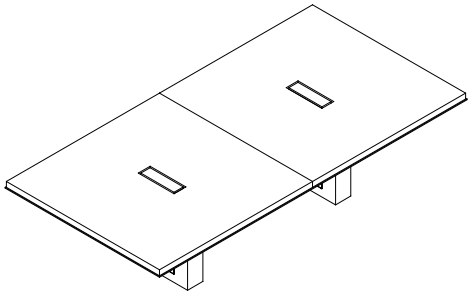

Starting Price: $19,228

60x120 table, slab veneer Tier 1 top, open painted base with no metal trim, powder coat finish

Pattern Number: 03R60X120

Step 1. Top Material

S	Slab (veneer only)
V	Veneer layered
G	Glass layered
C	Corian layered
Q	Caesarstone layered

Step 2. Base Options

ON	Open Base, no metal trim	+ 0
MC _ _	Open Base, MC metal trim	+3,872
PM01	Open Base, PM01 metal trim	+4,035
PM02	Open Base, PM02 metal trim	+4,035
PM03	Open Base, PM03 metal trim	+5,446

Step 3. Metal Edge Finish

MC _ _	Powder Coat	+0
PM01	Polished Chrome	+1,098
PM02	Satin Nickel	+497
PM03	Oil Rubbed Bronze	+879

Step 4A. Top Finish

T1 _ _	Veneer Tier 1	+0
T2 _ _	Veneer Tier 2	+1,150
GC _ _	Clear Glass, back painted	+4,950
GE _ _	Etched matte Glass, back painted	+5,950
CS01	Corian Glacier White	+7,250
QS _ _	Caesarstone	+18,750

Step 4B. Lower Layer Finish (Layer top only)

SL _ _	Satin Lacquer	+485
T _ _ _	Veneer Tier 1, 2, 3	+722
HG _ _	High Gloss Polyester	+794

Step 5. Base Finish

T1 _ _	Veneer Tier 1	+838
T2 _ _	Veneer Tier 2	+2,006
SL _ _	Satin Lacquer	+0
HG _ _	High Gloss Polyester	+3,868

Step 6. Power & Connectivity Access: Optional

DRHW	Drawer, Hardwired (layered edge only), Qty 6	+10,242
DRPI	Drawer, Plug In (layered edge only), Qty 6	+8,766
TMHW	Tabletop Metal lid, Hardwired, Qty 2	+9,514
TMPI	Tabletop Metal lid, Plug In, Qty 2	+8,402
TWHW	Tabletop Wood lid, Hardwired (veneer tops only), Qty 2	+8,452
TWPI	Tabletop Wood lid, Plug In (veneer tops only), Qty 2	+7,300
UMHW	Undermount, Hardwired, Qty 6	+6,114
UMPI	Undermount, Plug In, Qty 6	+4,446

Step 7. Microphone and/or Grommet Accommodations: Optional

MA _ _	Microphone hole (factory cut)	Qty _ _ x 321 each
GM _ _	2” Grommet Hole (factory cut), liner, lid, in matching metal finish	Qty _ _ x 423 each

Please consult **page 7** for the palette of DatesWeiser finishes. Natural stone, non-standard glass and veneer, and other technology options are available. Please email **customerservice@datesweiser.com** for a custom quote. Consult technical information on **page 294** for construction details and technical information.

Highline Fifty Rectangular Conference Table

60”x132”/ 12 Person
03R60X132

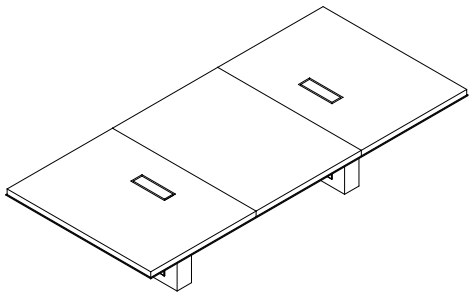

Starting Price: $23,895

60x132 table, slab veneer Tier 1 top, open painted base with no metal trim, powder coat finish

Pattern Number: 03R60X132

Step 1. Top Material

S	Slab (veneer only)
V	Veneer layered
G	Glass layered
C	Corian layered
Q	Caesarstone layered

Step 2. Base Options

ON	Open Base, no metal trim	+ 0
MC _ _	Open Base, MC metal trim	+3,872
PM01	Open Base, PM01 metal trim	+4,035
PM02	Open Base, PM02 metal trim	+4,035
PM03	Open Base, PM03 metal trim	+5,446

Step 3. Metal Edge Finish

MC _ _	Powder Coat	+0
PM01	Polished Chrome	+1,147
PM02	Satin Nickel	+432
PM03	Oil Rubbed Bronze	+779

Step 4A. Top Finish

T1 _ _	Veneer Tier 1	+0
T2 _ _	Veneer Tier 2	+1,265
GC _ _	Clear Glass, back painted	+5,445
GE _ _	Etched matte Glass, back painted	+6,545
CS01	Corian Glacier White	+7,975
QS _ _	Caesarstone	+20,625

Step 4B. Lower Layer Finish (Layer top only)

SL _ _	Satin Lacquer	+556
T _ _ _	Veneer Tier 1, 2, 3	+804
HG _ _	High Gloss Polyester	+885

Step 5. Base Finish

T1 _ _	Veneer Tier 1	+838
T2 _ _	Veneer Tier 2	+2,006
SL _ _	Satin Lacquer	+0
HG _ _	High Gloss Polyester	+3,868

Step 6. Power & Connectivity Access: Optional

DRHW	Drawer, Hardwired (layered edge only), Qty 6	+10,242
DRPI	Drawer, Plug In (layered edge only), Qty 6	+8,766
TMHW	Tabletop Metal lid, Hardwired, Qty 2	+9,514
TMPI	Tabletop Metal lid, Plug In, Qty 2	+8,402
TWHW	Tabletop Wood lid, Hardwired (veneer tops only), Qty 2	+8,452
TWPI	Tabletop Wood lid, Plug In (veneer tops only), Qty 2	+7,300
UMHW	Undermount, Hardwired, Qty 6	+6,114
UMPI	Undermount, Plug In, Qty 6	+4,446

Step 7. Microphone and/or Grommet Accommodations: Optional

MA _ _	Microphone hole (factory cut)	Qty _ _ x 321 each
GM _ _	2” Grommet Hole (factory cut), liner, lid, in matching metal finish	Qty _ _ x 423 each

Please consult **page 7** for the palette of DatesWeiser finishes. Natural stone, non-standard glass and veneer, and other technology options are available. Please email **customerservice@datesweiser.com** for a custom quote. Consult technical information on **page 294** for construction details and technical information.

Highline Fifty Rectangular Conference Table

60”x144”/ 12 Person
03R60X144

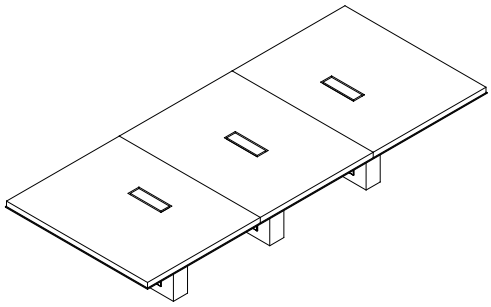

Starting Price: $25,110

60x144 table, slab veneer Tier 1 top, open painted base with no metal trim, powder coat finish

Pattern Number: 03R60X144

Step 1. Top Material

S	Slab (veneer only)
V	Veneer layered
G	Glass layered
C	Corian layered
Q	Caesarstone layered

Step 2. Base Options

ON	Open Base, no metal trim	+ 0
MC _ _	Open Base, MC metal trim	+5,808
PM01	Open Base, PM01 metal trim	+6,053
PM02	Open Base, PM02 metal trim	+6,053
PM03	Open Base, PM03 metal trim	+8,169

Step 3. Metal Edge Finish

MC _ _	Powder Coat	+0
PM01	Polished Chrome	+1,147
PM02	Satin Nickel	+432
PM03	Oil Rubbed Bronze	+779

Step 4A. Top Finish

T1 _ _	Veneer Tier 1	+0
T2 _ _	Veneer Tier 2	+1,380
GC _ _	Clear Glass, back painted	+5,940
GE _ _	Etched matte Glass, back painted	+7,140
CS01	Corian Glacier White	+8,700
QS _ _	Caesarstone	+22,500

Step 4B. Lower Layer Finish (Layer top only)

SL _ _	Satin Lacquer	+617
T _ _ _	Veneer Tier 1, 2, 3	+854
HG _ _	High Gloss Polyester	+940

Step 5. Base Finish

T1 _ _	Veneer Tier 1	+1,257
T2 _ _	Veneer Tier 2	+3,009
SL _ _	Satin Lacquer	+0
HG _ _	High Gloss Polyester	+5,802

Step 6. Power & Connectivity Access: Optional

DRHW	Drawer, Hardwired (layered edge only), Qty 6	+10,242
DRPI	Drawer, Plug In (layered edge only), Qty 6	+8,766
TMHW	Tabletop Metal lid, Hardwired, Qty 3	+14,271
TMPI	Tabletop Metal lid, Plug In, Qty 3	+12,603
TWHW	Tabletop Wood lid, Hardwired (veneer tops only), Qty 3	+12,678
TWPI	Tabletop Wood lid, Plug In (veneer tops only), Qty 3	+10,950
UMHW	Undermount, Hardwired, Qty 6	+6,114
UMPI	Undermount, Plug In, Qty 6	+4,446

Step 7. Microphone and/or Grommet Accommodations: Optional

MA _ _	Microphone hole (factory cut)	Qty _ _ x 321 each
GM _ _	2” Grommet Hole (factory cut), liner, lid, in matching metal finish	Qty _ _ x 423 each

Please consult **page 7** for the palette of DatesWeiser finishes. Natural stone, non-standard glass and veneer, and other technology options are available. Please email **customerservice@datesweiser.com** for a custom quote. Consult technical information on **page 294** for construction details and technical information.

Highline Fifty Rectangular Conference Table

60”x156”/ 12 Person
03R60X156

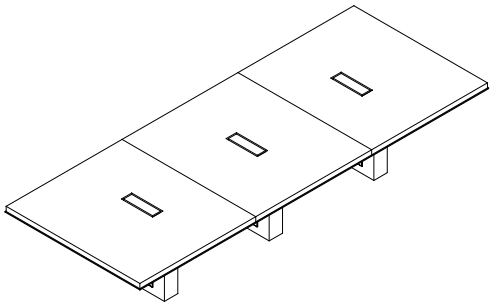

Starting Price: $26,092

60x156 table, slab veneer Tier 1 top, open painted base with no metal trim, powder coat finish

Pattern Number: 03R60X156

Step 1. Top Material

S	Slab (veneer only)
V	Veneer layered
G	Glass layered
C	Corian layered
Q	Caesarstone layered

Step 2. Base Options

ON	Open Base, no metal trim	+ 0
MC _ _	Open Base, MC metal trim	+5,808
PM01	Open Base, PM01 metal trim	+6,053
PM02	Open Base, PM02 metal trim	+6,053
PM03	Open Base, PM03 metal trim	+8,169

Step 3. Metal Edge Finish

MC _ _	Powder Coat	+0
PM01	Polished Chrome	+1,147
PM02	Satin Nickel	+432
PM03	Oil Rubbed Bronze	+779

Step 4A. Top Finish

T1 _ _	Veneer Tier 1	+0
T2 _ _	Veneer Tier 2	+1,495
GC _ _	Clear Glass, back painted	+6,435
GE _ _	Etched matte Glass, back painted	+7,735
CS01	Corian Glacier White	+9,425
QS _ _	Caesarstone	+24,375

Step 4B. Lower Layer Finish (Layer top only)

SL _ _	Satin Lacquer	+645
T _ _ _	Veneer Tier 1, 2, 3	+915
HG _ _	High Gloss Polyester	+1,006

Step 5. Base Finish

T1 _ _	Veneer Tier 1	+1,257
T2 _ _	Veneer Tier 2	+3,009
SL _ _	Satin Lacquer	+0
HG _ _	High Gloss Polyester	+5,802

Step 6. Power & Connectivity Access: Optional

DRHW	Drawer, Hardwired (layered edge only), Qty 6	+10,242
DRPI	Drawer, Plug In (layered edge only), Qty 6	+8,766
TMHW	Tabletop Metal lid, Hardwired, Qty 3	+14,271
TMPI	Tabletop Metal lid, Plug In, Qty 3	+12,603
TWHW	Tabletop Wood lid, Hardwired (veneer tops only), Qty 3	+12,678
TWPI	Tabletop Wood lid, Plug In (veneer tops only), Qty 3	+10,950
UMHW	Undermount, Hardwired, Qty 6	+6,114
UMPI	Undermount, Plug In, Qty 6	+4,446

Step 7. Microphone and/or Grommet Accommodations: Optional

MA _ _	Microphone hole (factory cut)	Qty _ _ x 321 each
GM _ _	2” Grommet Hole (factory cut), liner, lid, in matching metal finish	Qty _ _ x 423 each

Please consult **page 7** for the palette of DatesWeiser finishes. Natural stone, non-standard glass and veneer, and other technology options are available. Please email **customerservice@datesweiser.com** for a custom quote. Consult technical information on **page 294** for construction details and technical information.

Highline Fifty Rectangular Conference Table

60”x168”/ 14 Person
03R60X168

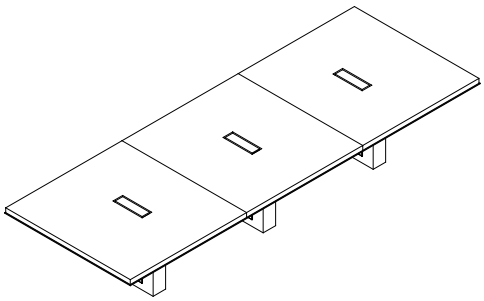

Starting Price: $27,401

60x168 table, slab veneer Tier 1 top, open painted base with no metal trim, powder coat finish

Pattern Number: 03R60X168

Step 1. Top Material

S	Slab (veneer only)
V	Veneer layered
G	Glass layered
C	Corian layered
Q	Caesarstone layered

Step 2. Base Options

ON	Open Base, no metal trim	+ 0
MC _ _	Open Base, MC metal trim	+5,808
PM01	Open Base, PM01 metal trim	+6,053
PM02	Open Base, PM02 metal trim	+6,053
PM03	Open Base, PM03 metal trim	+8,169

Step 3. Metal Edge Finish

MC _ _	Powder Coat	+0
PM01	Polished Chrome	+1,882
PM02	Satin Nickel	+682
PM03	Oil Rubbed Bronze	+984

Step 4A. Top Finish

T1 _ _	Veneer Tier 1	+0
T2 _ _	Veneer Tier 2	+1,610
GC _ _	Clear Glass, back painted	+6,930
GE _ _	Etched matte Glass, back painted	+8,330
CS01	Corian Glacier White	+10,150
QS _ _	Caesarstone	+26,250

Step 4B. Lower Layer Finish (Layer top only)

SL _ _	Satin Lacquer	+694
T _ _ _	Veneer Tier 1, 2, 3	+964
HG _ _	High Gloss Polyester	+1,061

Step 5. Base Finish

T1 _ _	Veneer Tier 1	+1,257
T2 _ _	Veneer Tier 2	+3,009
SL _ _	Satin Lacquer	+0
HG _ _	High Gloss Polyester	+5,802

Step 6. Power & Connectivity Access: Optional

DRHW	Drawer, Hardwired (layered edge only), Qty 6	+10,242
DRPI	Drawer, Plug In (layered edge only), Qty 6	+8,766
TMHW	Tabletop Metal lid, Hardwired, Qty 3	+14,271
TMPI	Tabletop Metal lid, Plug In, Qty 3	+12,603
TWHW	Tabletop Wood lid, Hardwired (veneer tops only), Qty 3	+12,678
TWPI	Tabletop Wood lid, Plug In (veneer tops only), Qty 3	+10,950
UMHW	Undermount, Hardwired, Qty 6	+6,114
UMPI	Undermount, Plug In, Qty 6	+4,446

Step 7. Microphone and/or Grommet Accommodations: Optional

MA _ _	Microphone hole (factory cut)	Qty _ _ x 321 each
GM _ _	2” Grommet Hole (factory cut), liner, lid, in matching metal finish	Qty _ _ x 423 each

Please consult **page 7** for the palette of DatesWeiser finishes. Natural stone, non-standard glass and veneer, and other technology options are available. Please email **customerservice@datesweiser.com** for a custom quote. Consult technical information on **page 294** for construction details and technical information.

Highline Fifty Rectangular Conference Table

60”x180”/ 16 Person
03R60X180

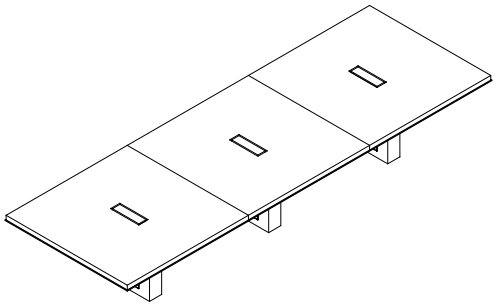

Starting Price: $28,398

60x180 table, slab veneer Tier 1 top, open painted base with no metal trim, powder coat finish

Pattern Number: 03R60X180

Step 1. Top Material

S	Slab (veneer only)
V	Veneer layered
G	Glass layered
C	Corian layered
Q	Caesarstone layered

Step 2. Base Options

ON	Open Base, no metal trim	+ 0
MC _ _	Open Base, MC metal trim	+5,808
PM01	Open Base, PM01 metal trim	+6,053
PM02	Open Base, PM02 metal trim	+6,053
PM03	Open Base, PM03 metal trim	+8,169

Step 3. Metal Edge Finish

MC _ _	Powder Coat	+0
PM01	Polished Chrome	+1,882
PM02	Satin Nickel	+628
PM03	Oil Rubbed Bronze	+984

Step 4A. Top Finish

T1 _ _	Veneer Tier 1	+0
T2 _ _	Veneer Tier 2	+1,725
GC _ _	Clear Glass, back painted	+7,425
GE _ _	Etched matte Glass, back painted	+8,925
CS01	Corian Glacier White	+10,875
QS _ _	Caesarstone*	+28,125

Step 4B. Lower Layer Finish (Layer top only)

SL _ _	Satin Lacquer	+711
T _ _ _	Veneer Tier 1, 2, 3	+997
HG _ _	High Gloss Polyester	+1,098

Step 5. Base Finish

T1 _ _	Veneer Tier 1	+1,257
T2 _ _	Veneer Tier 2	+3,009
SL _ _	Satin Lacquer	+0
HG _ _	High Gloss Polyester	+5,802

Step 6. Power & Connectivity Access: Optional

DRHW	Drawer, Hardwired (layered edge only), Qty 8	+13,656
DRPI	Drawer, Plug In (layered edge only), Qty 8	+11,688
TMHW	Tabletop Metal lid, Hardwired, Qty 3	+14,271
TMPI	Tabletop Metal lid, Plug In, Qty 3	+12,603
TWHW	Tabletop Wood lid, Hardwired (veneer tops only), Qty 3	+12,678
TWPI	Tabletop Wood lid, Plug In (veneer tops only), Qty 3	+10,950
UMHW	Undermount, Hardwired, Qty 8	+8,152
UMPI	Undermount, Plug In, Qty 8	+5,928

Step 7. Microphone and/or Grommet Accommodations: Optional

MA _ _	Microphone hole (factory cut)	Qty _ _ x 321 each
GM _ _	2” Grommet Hole (factory cut), liner, lid, in matching metal finish	Qty _ _ x 423 each

Please consult **page 7** for the palette of DatesWeiser finishes. Natural stone, non-standard glass and veneer, and other technology options are available. Please email **customerservice@datesweiser.com** for a custom quote. Consult technical information on **page 294** for construction details and technical information.

*Tables with a Caesarstone finish require a 4-section top.

Highline Fifty Rectangular Conference Table

60”x192”/ 16 Person
03R60X192

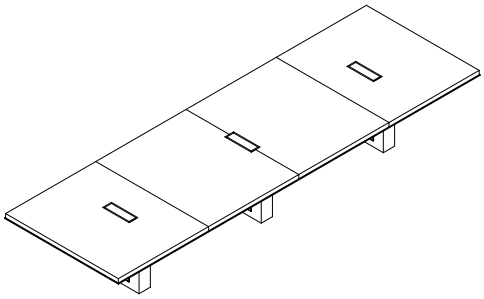

Starting Price: $32,604

60x192 table, slab veneer Tier 1 top, open painted base with no metal trim, powder coat finish

Pattern Number: 03R60X192

Step 1. Top Material

S	Slab (veneer only)
V	Veneer layered
G	Glass layered
C	Corian layered
Q	Caesarstone layered

Step 2. Base Options

ON	Open Base, no metal trim	+ 0
MC _ _	Open Base, MC metal trim	+5,808
PM01	Open Base, PM01 metal trim	+6,053
PM02	Open Base, PM02 metal trim	+6,053
PM03	Open Base, PM03 metal trim	+8,169

Step 3. Metal Edge Finish

MC _ _	Powder Coat	+0
PM01	Polished Chrome	+1,882
PM02	Satin Nickel	+628
PM03	Oil Rubbed Bronze	+984

Step 4A. Top Finish

T1 _ _	Veneer Tier 1	+0
T2 _ _	Veneer Tier 2	+1,840
GC_ _	Clear Glass, back painted	+7,920
GE _ _	Etched matte Glass, back painted	+9,520
CS01	Corian Glacier White	+11,600
QS_ _	Caesarstone	+30,000

Step 4B. Lower Layer Finish (Layer top only)

SL _ _	Satin Lacquer	+766
T_ _ _	Veneer Tier 1, 2, 3	+1,086
HG _ _	High Gloss Polyester	+1,195

Step 5. Base Finish

T1 _ _	Veneer Tier 1	+1,257
T2 _ _	Veneer Tier 2	+3,009
SL _ _	Satin Lacquer	+0
HG _ _	High Gloss Polyester	+5,802

Step 6. Power & Connectivity Access: Optional

DRHW	Drawer, Hardwired (layered edge only), Qty 8	+13,656
DRPI	Drawer, Plug In (layered edge only), Qty 8	+11,688
TMHW	Tabletop Metal lid, Hardwired, Qty 3	+14,271
TMPI	Tabletop Metal lid, Plug In, Qty 3	+12,603
TWHW	Tabletop Wood lid, Hardwired (veneer tops only), Qty 3	+12,678
TWPI	Tabletop Wood lid, Plug In (veneer tops only), Qty 3	+10,950
UMHW	Undermount, Hardwired, Qty 8	+8,152
UMPI	Undermount, Plug In, Qty 8	+5,928

Step 7. Microphone and/or Grommet Accommodations: Optional

MA _ _	Microphone hole (factory cut)	Qty _ _ x 321 each
GM _ _	2” Grommet Hole (factory cut), liner, lid, in matching metal finish	Qty _ _ x 423 each

Please consult **page 7** for the palette of DatesWeiser finishes. Natural stone, non-standard glass and veneer, and other technology options are available. Please email **customerservice@datesweiser.com** for a custom quote. Consult technical information on **page 294** for construction details and technical information.

Highline Fifty Rectangular Conference Table

60”x204”/ 16 Person
03R60X204

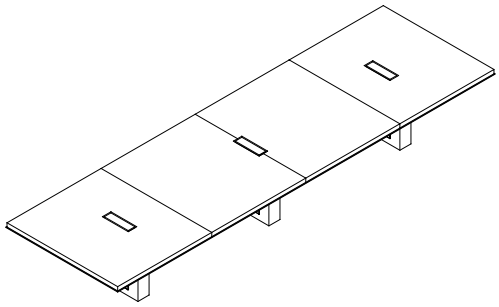

Starting Price: $33,566

60x204 table, slab veneer Tier 1 top, open painted base with no metal trim, powder coat finish

Pattern Number: 03R60X204

Step 1. Top Material	
S	Slab (veneer only)
V	Veneer layered
G	Glass layered
C	Corian layered
Q	Caesarstone layered

Step 2. Base Options		
ON	Open Base, no metal trim	+ 0
MC _ _	Open Base, MC metal trim	+5,808
PM01	Open Base, PM01 metal trim	+6,053
PM02	Open Base, PM02 metal trim	+6,053
PM03	Open Base, PM03 metal trim	+8,169

Step 3. Metal Edge Finish		
MC _ _	Powder Coat	+0
PM01	Polished Chrome	+1,882
PM02	Satin Nickel	+628
PM03	Oil Rubbed Bronze	+984

Step 4A. Top Finish		
T1 _ _	Veneer Tier 1	+0
T2 _ _	Veneer Tier 2	+1,955
GC _ _	Clear Glass, back painted	+8,415
GE _ _	Etched matte Glass, back painted	+10,115
CS01	Corian Glacier White	+12,325
QS _ _	Caesarstone	+31,875

Step 4B. Lower Layer Finish (Layer top only)		
SL _ _	Satin Lacquer	+810
T _ _ _	Veneer Tier 1, 2, 3	+1,146
HG _ _	High Gloss Polyester	+1,261

Step 5. Base Finish		
T1 _ _	Veneer Tier 1	+1,257
T2 _ _	Veneer Tier 2	+3,009
SL _ _	Satin Lacquer	+0
HG _ _	High Gloss Polyester	+5,802

Step 6. Power & Connectivity Access: Optional		
DRHW	Drawer, Hardwired (layered edge only), Qty 8	+13,656
DRPI	Drawer, Plug In (layered edge only), Qty 8	+11,688
TMHW	Tabletop Metal lid, Hardwired, Qty 3	+14,271
TMPI	Tabletop Metal lid, Plug In, Qty 3	+12,603
TWHW	Tabletop Wood lid, Hardwired (veneer tops only), Qty 3	+12,678
TWPI	Tabletop Wood lid, Plug In (veneer tops only), Qty 3	+10,950
UMHW	Undermount, Hardwired, Qty 8	+8,152
UMPI	Undermount, Plug In, Qty 8	+5,928

Step 7. Microphone and/or Grommet Accommodations: Optional		
MA _ _	Microphone hole (factory cut)	Qty _ _ x 321 each
GM _ _	2” Grommet Hole (factory cut), liner, lid, in matching metal finish	Qty _ _ x 423 each

Please consult **page 7** for the palette of DatesWeiser finishes. Natural stone, non-standard glass and veneer, and other technology options are available. Please email **customerservice@datesweiser.com** for a custom quote. Consult technical information on **page 294** for construction details and technical information.

Highline Fifty Rectangular Conference Table

60”x216”/ 18 Person
03R60X216

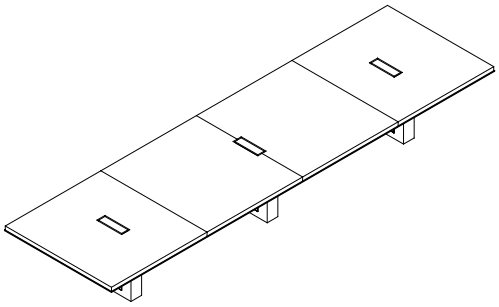

Starting Price: $34,568

60x216 table, slab veneer Tier 1 top, open painted base with no metal trim, powder coat finish

Pattern Number: 03R60X216

Step 1. Top Material

S	Slab (veneer only)
V	Veneer layered
G	Glass layered
C	Corian layered
Q	Caesarstone layered

Step 2. Base Options

ON	Open Base, no metal trim	+ 0
MC _ _	Open Base, MC metal trim	+5,808
PM01	Open Base, PM01 metal trim	+6,053
PM02	Open Base, PM02 metal trim	+6,053
PM03	Open Base, PM03 metal trim	+8,169

Step 3. Metal Edge Finish

MC _ _	Powder Coat	+0
PM01	Polished Chrome	+1,882
PM02	Satin Nickel	+628
PM03	Oil Rubbed Bronze	+984

Step 4A. Top Finish

T1 _ _	Veneer Tier 1	+0
T2 _ _	Veneer Tier 2	+2,070
GC _ _	Clear Glass, back painted	+8,910
GE _ _	Etched matte Glass, back painted	+10,710
CS01	Corian Glacier White	+13,050
QS _ _	Caesarstone	+33,750

Step 4B. Lower Layer Finish (Layer top only)

SL _ _	Satin Lacquer	+849
T _ _ _	Veneer Tier 1, 2, 3	+1,174
HG _ _	High Gloss Polyester	+1,292

Step 5. Base Finish

T1 _ _	Veneer Tier 1	+1,257
T2 _ _	Veneer Tier 2	+3,009
SL _ _	Satin Lacquer	+0
HG _ _	High Gloss Polyester	+5,802

Step 6. Power & Connectivity Access: Optional

DRHW	Drawer, Hardwired (layered edge only), Qty 8	+13,656
DRPI	Drawer, Plug In (layered edge only), Qty 8	+11,688
TMHW	Tabletop Metal lid, Hardwired, Qty 3	+14,271
TMPI	Tabletop Metal lid, Plug In, Qty 3	+12,603
TWHW	Tabletop Wood lid, Hardwired (veneer tops only), Qty 3	+12,678
TWPI	Tabletop Wood lid, Plug In (veneer tops only), Qty 3	+10,950
UMHW	Undermount, Hardwired, Qty 8	+8,152
UMPI	Undermount, Plug In, Qty 8	+5,928

Step 7. Microphone and/or Grommet Accommodations: Optional

MA _ _	Microphone hole (factory cut)	Qty _ _ x 321 each
GM _ _	2” Grommet Hole (factory cut), liner, lid, in matching metal finish	Qty _ _ x 423 each

Please consult **page 7** for the palette of DatesWeiser finishes. Natural stone, non-standard glass and veneer, and other technology options are available. Please email **customerservice@datesweiser.com** for a custom quote. Consult technical information on **page 294** for construction details and technical information.

Highline Fifty Rectangular Conference Table

60”x228”/ 18 Person
03R60X228

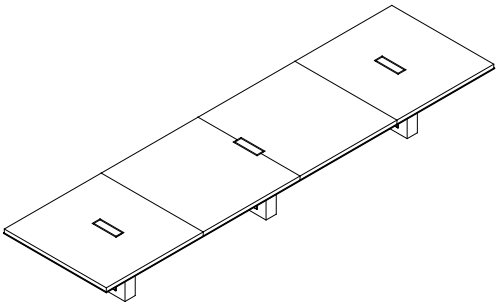

Starting Price: $35,530

60x228 table, slab veneer Tier 1 top, open painted base with no metal trim, powder coat finish

Pattern Number: 03R60X228

Step 1. Top Material

S	Slab (veneer only)
V	Veneer layered
G	Glass layered
C	Corian layered
Q	Caesarstone layered

Step 2. Base Options

ON	Open Base, no metal trim	+ 0
MC _ _	Open Base, MC metal trim	+5,808
PM01	Open Base, PM01 metal trim	+6,053
PM02	Open Base, PM02 metal trim	+6,053
PM03	Open Base, PM03 metal trim	+8,169

Step 3. Metal Edge Finish

MC _ _	Powder Coat	+0
PM01	Polished Chrome	+1,882
PM02	Satin Nickel	+628
PM03	Oil Rubbed Bronze	+984

Step 4A. Top Finish

T1 _ _	Veneer Tier 1	+0
T2 _ _	Veneer Tier 2	+2,185
GC _ _	Clear Glass, back painted	+9,405
GE _ _	Etched matte Glass, back painted	+11,305
CS01	Corian Glacier White	+13,775
QS _ _	Caesarstone*	+35,625

Step 4B. Lower Layer Finish (Layer top only)

SL _ _	Satin Lacquer	+893
T _ _ _	Veneer Tier 1, 2, 3	+1,268
HG _ _	High Gloss Polyester	+1,395

Step 5. Base Finish

T1 _ _	Veneer Tier 1	+1,257
T2 _ _	Veneer Tier 2	+3,009
SL _ _	Satin Lacquer	+0
HG _ _	High Gloss Polyester	+5,802

Step 6. Power & Connectivity Access: Optional

DRHW	Drawer, Hardwired (layered edge only), Qty 8	+13,656
DRPI	Drawer, Plug In (layered edge only), Qty 8	+11,688
TMHW	Tabletop Metal lid, Hardwired, Qty 3	+14,271
TMPI	Tabletop Metal lid, Plug In, Qty 3	+12,603
TWHW	Tabletop Wood lid, Hardwired (veneer tops only), Qty 3	+12,678
TWPI	Tabletop Wood lid, Plug In (veneer tops only), Qty 3	+10,950
UMHW	Undermount, Hardwired, Qty 8	+8,152
UMPI	Undermount, Plug In, Qty 8	+5,928

Step 7. Microphone and/or Grommet Accommodations: Optional

MA _ _	Microphone hole (factory cut)	Qty _ _ x 321 each
GM _ _	2” Grommet Hole (factory cut), liner, lid, in matching metal finish	Qty _ _ x 423 each

Please consult **page 7** for the palette of DatesWeiser finishes. Natural stone, non-standard glass and veneer, and other technology options are available. Please email **customerservice@datesweiser.com** for a custom quote. Consult technical information on **page 294** for construction details and technical information.

*Tables with a Caesarstone finish require a 5-section top.

Highline Fifty Rectangular Conference Table

60”x240”/ 20 Person
03R60X240

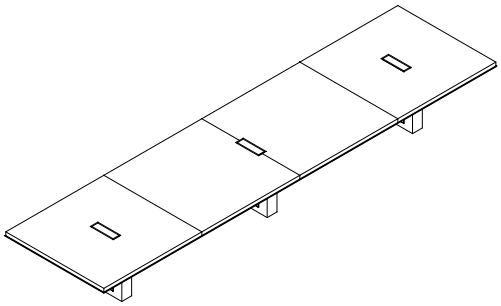

Starting Price: $36,497

60x240 table, slab veneer Tier 1 top, open painted base with no metal trim, powder coat finish

Pattern Number: 03R60X240

Step 1. Top Material	
S	Slab (veneer only)
V	Veneer layered
G	Glass layered
C	Corian layered
Q	Caesarstone layered

Step 2. Base Options		
ON	Open Base, no metal trim	+ 0
MC _ _	Open Base, MC metal trim	+5,808
PM01	Open Base, PM01 metal trim	+6,053
PM02	Open Base, PM02 metal trim	+6,053
PM03	Open Base, PM03 metal trim	+8,169

Step 3. Metal Edge Finish		
MC _ _	Powder Coat	+0
PM01	Polished Chrome	+1,882
PM02	Satin Nickel	+628
PM03	Oil Rubbed Bronze	+984

Step 4A. Top Finish		
T1 _ _	Veneer Tier 1	+0
T2 _ _	Veneer Tier 2	+2,300
GC _ _	Clear Glass, back painted	+9,900
GE _ _	Etched matte Glass, back painted	+11,900
CS01	Corian Glacier White	+14,500
QS _ _	Caesarstone*	+37,500

Step 4B. Lower Layer Finish (Layer top only)		
SL _ _	Satin Lacquer	+937
T _ _ _	Veneer Tier 1, 2, 3	+1,328
HG _ _	High Gloss Polyester	+1,462

Step 5. Base Finish		
T1 _ _	Veneer Tier 1	+1,257
T2 _ _	Veneer Tier 2	+3,009
SL _ _	Satin Lacquer	+0
HG _ _	High Gloss Polyester	+5,802

Step 6. Power & Connectivity Access: Optional		
DRHW	Drawer, Hardwired (layered edge only), Qty 10	+17,070
DRPI	Drawer, Plug In (layered edge only), Qty 10	+14,610
TMHW	Tabletop Metal lid, Hardwired, Qty 3	+14,271
TMPI	Tabletop Metal lid, Plug In, Qty 3	+12,603
TWHW	Tabletop Wood lid, Hardwired (veneer tops only), Qty 3	+12,678
TWPI	Tabletop Wood lid, Plug In (veneer tops only), Qty 3	+10,950
UMHW	Undermount, Hardwired, Qty 10	+10,190
UMPI	Undermount, Plug In, Qty 10	+7,410

Step 7. Microphone and/or Grommet Accommodations: Optional		
MA _ _	Microphone hole (factory cut)	Qty _ _ x 321 each
GM _ _	2” Grommet Hole (factory cut), liner, lid, in matching metal finish	Qty _ _ x 423 each

Please consult **page 7** for the palette of DatesWeiser finishes. Natural stone, non-standard glass and veneer, and other technology options are available. Please email **customerservice@datesweiser.com** for a custom quote. Consult technical information on **page 294** for construction details and technical information.

*Tables with a Caesarstone finish require a 5-section top.

Highline Fifty Conference Tables Index

72″ width

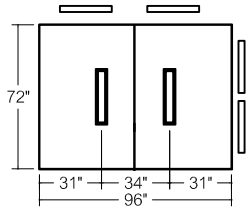

03R72X96
8 Person Table

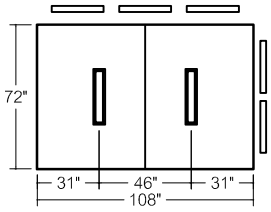

03R72X108
10 Person Table

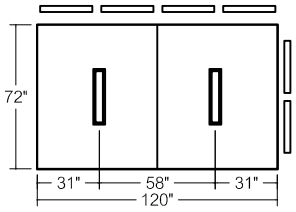

03R72X120
12 Person Table

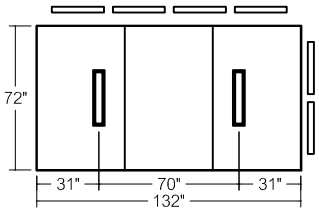

03R72X132
12 Person Table

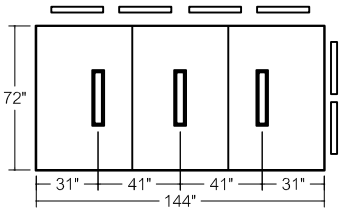

03R72X144
12 Person Table

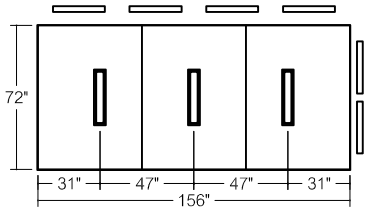

03R72X156
12 Person Table

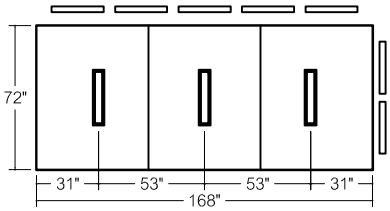

03R72X168
14 Person Table

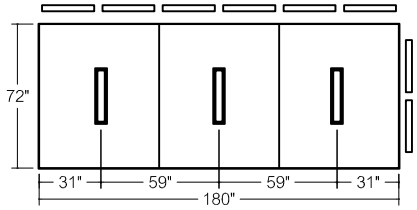

03R72X180
16 Person Table

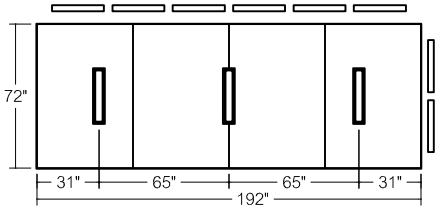

03R72X192
16 Person Table

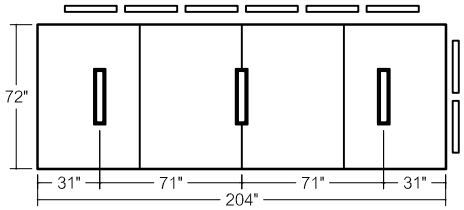

03R72X204
16 Person Table

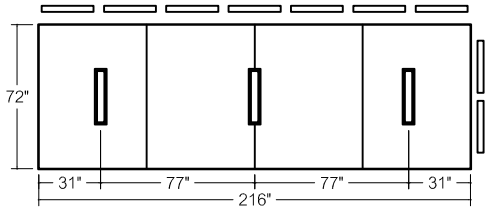

03R72X216
18 Person Table

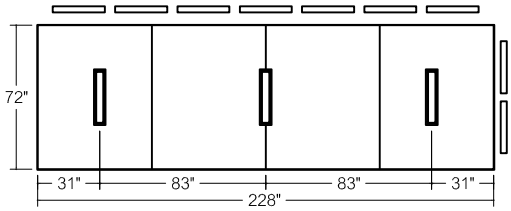

03R72X228
18 Person Table

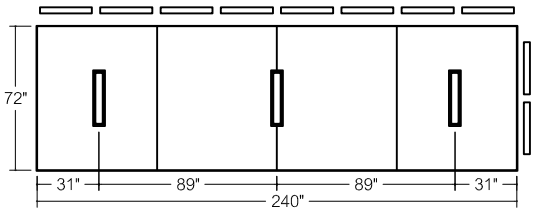

03R72X240
20 Person Table

Highline Fifty Rectangular Conference Table

72”x96”/ 8 Person
03R72X96

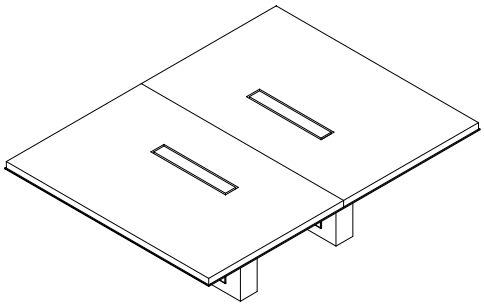

Starting Price: $18,792

72x96 table, slab veneer Tier 1 top, open painted base with no metal trim, powder coat finish

Pattern Number: 03R72X96

Step 1. Top Material	
S	Slab (veneer only)
V	Veneer layered
G	Glass layered
C	Corian layered
Q	Caesarstone layered

Step 2. Base Options		
ON	Open Base, no metal trim	+ 0
MC _ _	Open Base, MC metal trim	+3,872
PM01	Open Base, PM01 metal trim	+4.035
PM02	Open Base, PM02 metal trim	+4,035
PM03	Open Base, PM03 metal trim	+5,446

Step 3. Metal Edge Finish		
MC _ _	Powder Coat	+0
PM01	Polished Chrome	+1,098
PM02	Satin Nickel	+497
PM03	Oil Rubbed Bronze	+879

Step 4A. Top Finish		
T1 _ _	Veneer Tier 1	+0
T2 _ _	Veneer Tier 2	+1,104
GC _ _	Clear Glass, back painted	+4,752
GE _ _	Etched matte Glass, back painted	+5,712
CS01	Corian Glacier White	+6,960
QS _ _	Caesarstone	+18,000

Step 4B. Lower Layer Finish (Layer top only)		
SL _ _	Satin Lacquer	+455
T _ _ _	Veneer Tier 1, 2, 3	+647
HG _ _	High Gloss Polyester	+713

Step 5. Base Finish		
T1 _ _	Veneer Tier 1	+838
T2 _ _	Veneer Tier 2	+2,006
SL _ _	Satin Lacquer	+0
HG _ _	High Gloss Polyester	+3,868

Step 6. Power & Connectivity Access: Optional		
DRHW	Drawer, Hardwired (layered edge only), Qty 4	+6,828
DRPI	Drawer, Plug In (layered edge only), Qty 4	+5,844
TMHW	Tabletop Metal lid, Hardwired, Qty 2	+9,514
TMPI	Tabletop Metal lid, Plug In, Qty 2	+8,402
TWHW	Tabletop Wood lid, Hardwired (veneer tops only), Qty 2	+8,452
TWPI	Tabletop Wood lid, Plug In (veneer tops only), Qty 2	+7,300
UMHW	Undermount, Hardwired, Qty 4	+4,076
UMPI	Undermount, Plug In, Qty 4	+2,964

Step 7. Microphone and/or Grommet Accommodations: Optional		
MA _ _	Microphone hole (factory cut)	Qty _ _ x 321 each
GM _ _	2” Grommet Hole (factory cut), liner, lid, in matching metal finish	Qty _ _ x 423 each

Please consult **page 7** for the palette of DatesWeiser finishes. Natural stone, non-standard glass and veneer, and other technology options are available. Please email **customerservice@datesweiser.com** for a custom quote. Consult technical information on **page 294** for construction details and technical information.

Highline Fifty Rectangular Conference Table

72”x108”/ 10 Person
03R72X108

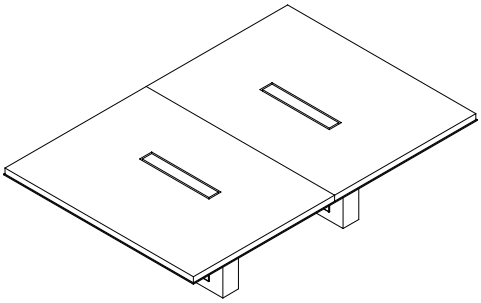

Starting Price: $19,947

72x208 table, slab veneer Tier 1 top, open painted base with no metal trim, powder coat finish

Pattern Number: 03R72X108

Step 1. Top Material

S	Slab (veneer only)
V	Veneer layered
G	Glass layered
C	Corian layered
Q	Caesarstone layered

Step 2. Base Options

ON	Open Base, no metal trim	+ 0
MC _ _	Open Base, MC metal trim	+3,872
PM01	Open Base, PM01 metal trim	+4.035
PM02	Open Base, PM02 metal trim	+4,035
PM03	Open Base, PM03 metal trim	+5,446

Step 3. Metal Edge Finish

MC _ _	Powder Coat	+0
PM01	Polished Chrome	+1,098
PM02	Satin Nickel	+497
PM03	Oil Rubbed Bronze	+879

Step 4A. Top Finish

T1 _ _	Veneer Tier 1	+0
T2 _ _	Veneer Tier 2	+1,242
GC _ _	Clear Glass, back painted	+5,346
GE _ _	Etched matte Glass, back painted	+6,426
CS01	Corian Glacier White	+7,830
QS _ _	Caesarstone	+20,250

Step 4B. Lower Layer Finish (Layer top only)

SL _ _	Satin Lacquer	+518
T _ _ _	Veneer Tier 1, 2, 3	+766
HG _ _	High Gloss Polyester	+844

Step 5. Base Finish

T1 _ _	Veneer Tier 1	+838
T2 _ _	Veneer Tier 2	+2,006
SL _ _	Satin Lacquer	+0
HG _ _	High Gloss Polyester	+3,868

Step 6. Power & Connectivity Access: Optional

DRHW	Drawer, Hardwired (layered edge only), Qty 4	+6,828
DRPI	Drawer, Plug In (layered edge only), Qty 4	+5,844
TMHW	Tabletop Metal lid, Hardwired, Qty 2	+9,514
TMPI	Tabletop Metal lid, Plug In, Qty 2	+8,402
TWHW	Tabletop Wood lid, Hardwired (veneer tops only), Qty 2	+8,452
TWPI	Tabletop Wood lid, Plug In (veneer tops only), Qty 2	+7,300
UMHW	Undermount, Hardwired, Qty 4	+4,076
UMPI	Undermount, Plug In, Qty 4	+2,964

Step 7. Microphone and/or Grommet Accommodations: Optional

MA _ _	Microphone hole (factory cut)	Qty _ _ x 321 each
GM _ _	2” Grommet Hole (factory cut), liner, lid, in matching metal finish	Qty _ _ x 423 each

Please consult **page 7** for the palette of DatesWeiser finishes. Natural stone, non-standard glass and veneer, and other technology options are available. Please email **customerservice@datesweiser.com** for a custom quote. Consult technical information on **page 294** for construction details and technical information.

Highline Fifty Rectangular Conference Table

72”x120”/ 12 Person
03R72X120

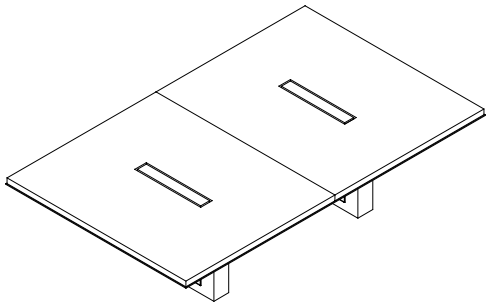

Starting Price: $21,207

72x120 table, slab veneer Tier 1 top, open painted base with no metal trim, powder coat finish

Pattern Number: 03R72X120

Step 1. Top Material

S	Slab (veneer only)
V	Veneer layered
G	Glass layered
C	Corian layered
Q	Caesarstone layered

Step 2. Base Options

ON	Open Base, no metal trim	+ 0
MC _ _	Open Base, MC metal trim	+3,872
PM01	Open Base, PM01 metal trim	+4.035
PM02	Open Base, PM02 metal trim	+4,035
PM03	Open Base, PM03 metal trim	+5,446

Step 3. Metal Edge Finish

MC _ _	Powder Coat	+0
PM01	Polished Chrome	+1,098
PM02	Satin Nickel	+497
PM03	Oil Rubbed Bronze	+879

Step 4A. Top Finish

T1 _ _	Veneer Tier 1	+0
T2 _ _	Veneer Tier 2	+1,380
GC _ _	Clear Glass, back painted	+5,940
GE _ _	Etched matte Glass, back painted	+7,140
CS01	Corian Glacier White	+8,700
QS _ _	Caesarstone	+22,500

Step 4B. Lower Layer Finish (Layer top only)

SL _ _	Satin Lacquer	+568
T _ _ _	Veneer Tier 1, 2, 3	+837
HG _ _	High Gloss Polyester	+922

Step 5. Base Finish

T1 _ _	Veneer Tier 1	+838
T2 _ _	Veneer Tier 2	+2,006
SL _ _	Satin Lacquer	+0
HG _ _	High Gloss Polyester	+3,868

Step 6. Power & Connectivity Access: Optional

DRHW	Drawer, Hardwired (layered edge only), Qty 6	+10,242
DRPI	Drawer, Plug In (layered edge only), Qty 6	+8,766
TMHW	Tabletop Metal lid, Hardwired, Qty 2	+9,514
TMPI	Tabletop Metal lid, Plug In, Qty 2	+8,402
TWHW	Tabletop Wood lid, Hardwired (veneer tops only), Qty 2	+8,452
TWPI	Tabletop Wood lid, Plug In (veneer tops only), Qty 2	+7,300
UMHW	Undermount, Hardwired, Qty 6	+6,114
UMPI	Undermount, Plug In, Qty 6	+4,446

Step 7. Microphone and/or Grommet Accommodations: Optional

MA _ _	Microphone hole (factory cut)	Qty _ _ x 321 each
GM _ _	2” Grommet Hole (factory cut), liner, lid, in matching metal finish	Qty _ _ x 423 each

Please consult **page 7** for the palette of DatesWeiser finishes. Natural stone, non-standard glass and veneer, and other technology options are available. Please email **customerservice@datesweiser.com** for a custom quote. Consult technical information on **page 294** for construction details and technical information.

Highline Fifty Rectangular Conference Table

72”x132”/ 12 Person
03R72X132

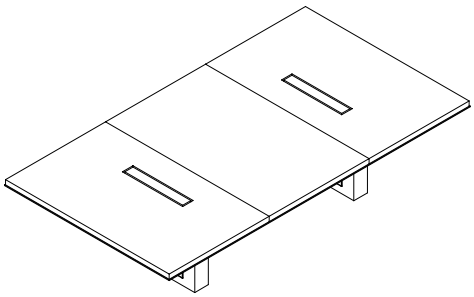

Starting Price: $26,097

72x132 table, slab veneer Tier 1 top, open painted base with no metal trim, powder coat finish

Pattern Number: 03R72X132

Step 1. Top Material

S	Slab (veneer only)
V	Veneer layered
G	Glass layered
C	Corian layered
Q	Caesarstone layered

Step 2. Base Options

ON	Open Base, no metal trim	+ 0
MC _ _	Open Base, MC metal trim	+3,872
PM01	Open Base, PM01 metal trim	+4.035
PM02	Open Base, PM02 metal trim	+4,035
PM03	Open Base, PM03 metal trim	+5,446

Step 3. Metal Edge Finish

MC _ _	Powder Coat	+0
PM01	Polished Chrome	+1,147
PM02	Satin Nickel	+432
PM03	Oil Rubbed Bronze	+779

Step 4A. Top Finish

T1 _ _	Veneer Tier 1	+0
T2 _ _	Veneer Tier 2	+1,518
GC _ _	Clear Glass, back painted	+6,534
GE _ _	Etched matte Glass, back painted	+7,854
CS01	Corian Glacier White	+9,570
QS _ _	Caesarstone	+24,750

Step 4B. Lower Layer Finish (Layer top only)

SL _ _	Satin Lacquer	+623
T _ _ _	Veneer Tier 1, 2, 3	+865
HG _ _	High Gloss Polyester	+952

Step 5. Base Finish

T1 _ _	Veneer Tier 1	+838
T2 _ _	Veneer Tier 2	+2,006
SL _ _	Satin Lacquer	+0
HG _ _	High Gloss Polyester	+3,868

Step 6. Power & Connectivity Access: Optional

DRHW	Drawer, Hardwired (layered edge only), Qty 6	+10,242
DRPI	Drawer, Plug In (layered edge only), Qty 6	+8,766
TMHW	Tabletop Metal lid, Hardwired, Qty 2	+9,514
TMPI	Tabletop Metal lid, Plug In, Qty 2	+8,402
TWHW	Tabletop Wood lid, Hardwired (veneer tops only), Qty 2	+8,452
TWPI	Tabletop Wood lid, Plug In (veneer tops only), Qty 2	+7,300
UMHW	Undermount, Hardwired, Qty 6	+6,114
UMPI	Undermount, Plug In, Qty 6	+4,446

Step 7. Microphone and/or Grommet Accommodations: Optional

MA _ _	Microphone hole (factory cut)	Qty _ _ x 321 each
GM _ _	2” Grommet Hole (factory cut), liner, lid, in matching metal finish	Qty _ _ x 423 each

Please consult **page 7** for the palette of DatesWeiser finishes. Natural stone, non-standard glass and veneer, and other technology options are available. Please email **customerservice@datesweiser.com** for a custom quote. Consult technical information on **page 294** for construction details and technical information.

Highline Fifty Rectangular Conference Table

72”x144”/ 12 Person
03R72X144

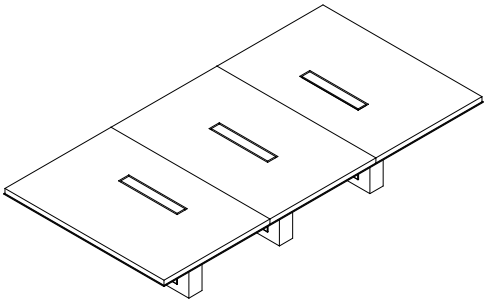

Starting Price: $27,535

72x144 table, slab veneer Tier 1 top, open painted base with no metal trim, powder coat finish

Pattern Number: 03R72X144

Step 1. Top Material

S	Slab (veneer only)
V	Veneer layered
G	Glass layered
C	Corian layered
Q	Caesarstone layered

Step 2. Base Options

ON	Open Base, no metal trim	+ 0
MC _ _	Open Base, MC metal trim	+5,808
PM01	Open Base, PM01 metal trim	+6,053
PM02	Open Base, PM02 metal trim	+6,053
PM03	Open Base, PM03 metal trim	+8,169

Step 3. Metal Edge Finish

MC _ _	Powder Coat	+0
PM01	Polished Chrome	+1,147
PM02	Satin Nickel	+432
PM03	Oil Rubbed Bronze	+779

Step 4A. Top Finish

T1 _ _	Veneer Tier 1	+0
T2 _ _	Veneer Tier 2	+1,656
GC _ _	Clear Glass, back painted	+7,128
GE _ _	Etched matte Glass, back painted	+8,568
CS01	Corian Glacier White	+10,440
QS _ _	Caesarstone	+27,000

Step 4B. Lower Layer Finish (Layer top only)

SL _ _	Satin Lacquer	+635
T _ _ _	Veneer Tier 1, 2, 3	+880
HG _ _	High Gloss Polyester	+969

Step 5. Base Finish

T1 _ _	Veneer Tier 1	+1,257
T2 _ _	Veneer Tier 2	+3,009
SL _ _	Satin Lacquer	+0
HG _ _	High Gloss Polyester	+5,802

Step 6. Power & Connectivity Access: Optional

DRHW	Drawer, Hardwired (layered edge only), Qty 6	+10,242
DRPI	Drawer, Plug In (layered edge only), Qty 6	+8,766
TMHW	Tabletop Metal lid, Hardwired, Qty 3	+14,271
TMPI	Tabletop Metal lid, Plug In, Qty 3	+12,603
TWHW	Tabletop Wood lid, Hardwired (veneer tops only), Qty 3	+12,678
TWPI	Tabletop Wood lid, Plug In (veneer tops only), Qty 3	+10,950
UMHW	Undermount, Hardwired, Qty 6	+6,114
UMPI	Undermount, Plug In, Qty 6	+4,446

Step 7. Microphone and/or Grommet Accommodations: Optional

MA _ _	Microphone hole (factory cut)	Qty _ _ x 321 each
GM _ _	2” Grommet Hole (factory cut), liner, lid, in matching metal finish	Qty _ _ x 423 each

Please consult **page 7** for the palette of DatesWeiser finishes. Natural stone, non-standard glass and veneer, and other technology options are available. Please email **customerservice@datesweiser.com** for a custom quote. Consult technical information on **page 294** for construction details and technical information.

Highline Fifty Rectangular Conference Table

72”x156”/ 12 Person
03R72X156

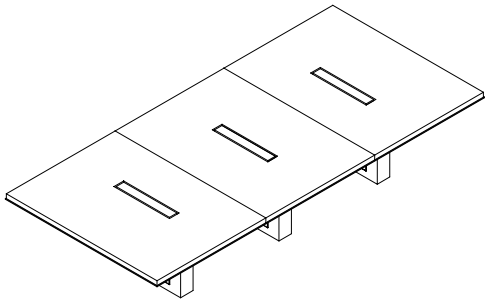

Starting Price: $28,666

72x156 table, slab veneer Tier 1 top, open painted base with no metal trim, powder coat finish

Pattern Number: 03R72X156

Step 1. Top Material

S	Slab (veneer only)
V	Veneer layered
G	Glass layered
C	Corian layered
Q	Caesarstone layered

Step 2. Base Options

ON	Open Base, no metal trim	+ 0
MC _ _	Open Base, MC metal trim	+5,808
PM01	Open Base, PM01 metal trim	+6,053
PM02	Open Base, PM02 metal trim	+6,053
PM03	Open Base, PM03 metal trim	+8,169

Step 3. Metal Edge Finish

MC _ _	Powder Coat	+0
PM01	Polished Chrome	+1,147
PM02	Satin Nickel	+432
PM03	Oil Rubbed Bronze	+779

Step 4A. Top Finish

T1 _ _	Veneer Tier 1	+0
T2 _ _	Veneer Tier 2	+1,794
GC _ _	Clear Glass, back painted, color	+7,722
GE _ _	Etched matte Glass, back painted, color	+9,282
CS01	Corian Glacier White	+11,310
QS _ _	Caesarstone	+29,250

Step 4B. Lower Layer Finish (Layer top only)

SL _ _	Satin Lacquer	+739
T _ _ _	Veneer Tier 1, 2, 3	+1,008
HG _ _	High Gloss Polyester	+1,109

Step 5. Base Finish

T1 _ _	Veneer Tier 1	+1,257
T2 _ _	Veneer Tier 2	+3,009
SL _ _	Satin Lacquer	+0
HG _ _	High Gloss Polyester	+5,802

Step 6. Power & Connectivity Access: Optional

DRHW	Drawer, Hardwired (layered edge only), Qty 6	+10,242
DRPI	Drawer, Plug In (layered edge only), Qty 6	+8,766
TMHW	Tabletop Metal lid, Hardwired, Qty 3	+14,271
TMPI	Tabletop Metal lid, Plug In, Qty 3	+12,603
TWHW	Tabletop Wood lid, Hardwired (veneer tops only), Qty 3	+12,678
TWPI	Tabletop Wood lid, Plug In (veneer tops only), Qty 3	+10,950
UMHW	Undermount, Hardwired, Qty 6	+6,114
UMPI	Undermount, Plug In, Qty 6	+4,446

Step 7. Microphone and/or Grommet Accommodations: Optional

MA _ _	Microphone hole (factory cut)	Qty _ _ x 321 each
GM _ _	2” Grommet Hole (factory cut), liner, lid, in matching metal finish	Qty _ _ x 423 each

Please consult **page 7** for the palette of DatesWeiser finishes. Natural stone, non-standard glass and veneer, and other technology options are available. Please email **customerservice@datesweiser.com** for a custom quote. Consult technical information on **page 294** for construction details and technical information.

Highline Fifty Rectangular Conference Table

72”x168”/ 14 Person
03R72X168

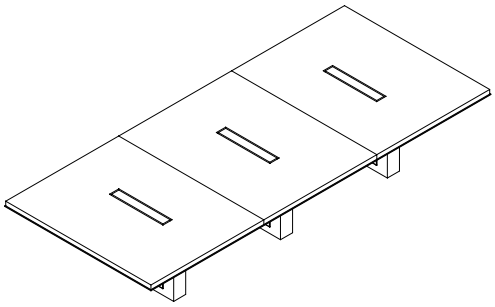

Starting Price: $30,179

72x168 table, slab veneer Tier 1 top, open painted base with no metal trim, powder coat finish

Pattern Number: 03R72X168

Step 1. Top Material

S	Slab (veneer only)
V	Veneer layered
G	Glass layered
C	Corian layered
Q	Caesarstone layered

Step 2. Base Options

ON	Open Base, no metal trim	+ 0
MC _ _	Open Base, MC metal trim	+5,808
PM01	Open Base, PM01 metal trim	+6,053
PM02	Open Base, PM02 metal trim	+6,053
PM03	Open Base, PM03 metal trim	+8,169

Step 3. Metal Edge Finish

MC _ _	Powder Coat	+0
PM01	Polished Chrome	+1,882
PM02	Satin Nickel	+628
PM03	Oil Rubbed Bronze	+984

Step 4A. Top Finish

T1 _ _	Veneer Tier 1	+0
T2 _ _	Veneer Tier 2	+1,932
GC _ _	Clear Glass, back painted	+8,316
GE _ _	Etched matte Glass, back painted	+9,996
CS01	Corian Glacier White	+12,180
QS _ _	Caesarstone	+31,500

Step 4B. Lower Layer Finish (Layer top only)

SL _ _	Satin Lacquer	+783
T _ _ _	Veneer Tier 1, 2, 3	+1,086
HG _ _	High Gloss Polyester	+1,195

Step 5. Base Finish

T1 _ _	Veneer Tier 1	+1,257
T2 _ _	Veneer Tier 2	+3,009
SL _ _	Satin Lacquer	+0
HG _ _	High Gloss Polyester	+5,802

Step 6. Power & Connectivity Access: Optional

DRHW	Drawer, Hardwired (layered edge only), Qty 6	+10,242
DRPI	Drawer, Plug In (layered edge only), Qty 6	+8,766
TMHW	Tabletop Metal lid, Hardwired, Qty 3	+14,271
TMPI	Tabletop Metal lid, Plug In, Qty 3	+12,603
TWHW	Tabletop Wood lid, Hardwired (veneer tops only), Qty 3	+12,678
TWPI	Tabletop Wood lid, Plug In (veneer tops only), Qty 3	+10,950
UMHW	Undermount, Hardwired, Qty 6	+6,114
UMPI	Undermount, Plug In, Qty 6	+4,446

Step 7. Microphone and/or Grommet Accommodations: Optional

MA _ _	Microphone hole (factory cut)	Qty _ _ x 321 each
GM _ _	2” Grommet Hole (factory cut), liner, lid, in matching metal finish	Qty _ _ x 423 each

Please consult **page 7** for the palette of DatesWeiser finishes. Natural stone, non-standard glass and veneer, and other technology options are available. Please email **customerservice@datesweiser.com** for a custom quote. Consult technical information on **page 294** for construction details and technical information.

Highline Fifty Rectangular Conference Table

72”x180”/ 16 Person
03R72X180

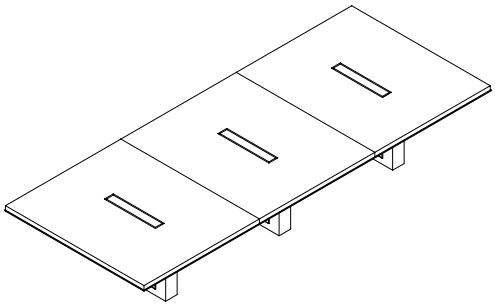

Starting Price: $31,344

72x180 table, slab veneer Tier 1 top, open painted base with no metal trim, powder coat finish

Pattern Number: 03R72X180

Step 1. Top Material	
S	Slab (veneer only)
V	Veneer layered
G	Glass layered
C	Corian layered
Q	Caesarstone layered

Step 2. Base Options		
ON	Open Base, no metal trim	+ 0
MC _ _	Open Base, MC metal trim	+5,808
PM01	Open Base, PM01 metal trim	+6,053
PM02	Open Base, PM02 metal trim	+6,053
PM03	Open Base, PM03 metal trim	+8,169

Step 3. Metal Edge Finish		
MC _ _	Powder Coat	+0
PM01	Polished Chrome	+1,882
PM02	Satin Nickel	+628
PM03	Oil Rubbed Bronze	+984

Step 4A. Top Finish		
T1 _ _	Veneer Tier 1	+0
T2 _ _	Veneer Tier 2	+2,070
GC _ _	Clear Glass, back painted	+8,910
GE _ _	Etched matte Glass, back painted	+10,710
CS01	Corian Glacier White	+13,050
QS _ _	Caesarstone*	+33,750

Step 4B. Lower Layer Finish (Layer top only)		
SL _ _	Satin Lacquer	+804
T _ _ _	Veneer Tier 1, 2, 3	+1,152
HG _ _	High Gloss Polyester	+1,268

Step 5. Base Finish		
T1 _ _	Veneer Tier 1	+1,257
T2 _ _	Veneer Tier 2	+3,009
SL _ _	Satin Lacquer	+0
HG _ _	High Gloss Polyester	+5,802

Step 6. Power & Connectivity Access: Optional		
DRHW	Drawer, Hardwired (layered edge only), Qty 8	+13,656
DRPI	Drawer, Plug In (layered edge only), Qty 8	+11,688
TMHW	Tabletop Metal lid, Hardwired, Qty 3	+14,271
TMPI	Tabletop Metal lid, Plug In, Qty 3	+12,603
TWHW	Tabletop Wood lid, Hardwired (veneer tops only), Qty 3	+12,678
TWPI	Tabletop Wood lid, Plug In (veneer tops only), Qty 3	+10,950
UMHW	Undermount, Hardwired, Qty 8	+8,152
UMPI	Undermount, Plug In, Qty 8	+5,928

Step 7. Microphone and/or Grommet Accommodations: Optional		
MA _ _	Microphone hole (factory cut)	Qty _ _ x 321 each
GM _ _	2” Grommet Hole (factory cut), liner, lid, in matching metal finish	Qty _ _ x 423 each

Please consult **page 7** for the palette of DatesWeiser finishes. Natural stone, non-standard glass and veneer, and other technology options are available. Please email **customerservice@datesweiser.com** for a custom quote. Consult technical information on **page 294** for construction details and technical information.

*Tables with a Caesarstone finish require a 4-section top.

Highline Fifty Rectangular Conference Table

72”x192”/ 16 Person
03R72X192

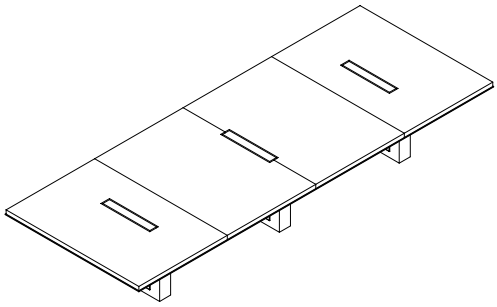

Starting Price: $35,753

72x192 table, slab veneer Tier 1 top, open painted base with no metal trim, powder coat finish

Pattern Number: 03R72X192

Step 1. Top Material

S	Slab (veneer only)
V	Veneer layered
G	Glass layered
C	Corian layered
Q	Caesarstone layered

Step 2. Base Options

ON	Open Base, no metal trim	+ 0
MC _ _	Open Base, MC metal trim	+5,808
PM01	Open Base, PM01 metal trim	+6,053
PM02	Open Base, PM02 metal trim	+6,053
PM03	Open Base, PM03 metal trim	+8,169

Step 3. Metal Edge Finish

MC _ _	Powder Coat	+0
PM01	Polished Chrome	+1,882
PM02	Satin Nickel	+628
PM03	Oil Rubbed Bronze	+984

Step 4A. Top Finish

T1 _ _	Veneer Tier 1	+0
T2 _ _	Veneer Tier 2	+2,208
GC _ _	Clear Glass, back painted	+9,504
GE _ _	Etched matte Glass, back painted	+11,424
CS01	Corian Glacier White	+13,920
QS _ _	Caesarstone	+36,000

Step 4B. Lower Layer Finish (Layer top only)

SL _ _	Satin Lacquer	+865
T _ _ _	Veneer Tier 1, 2, 3	+1,217
HG _ _	High Gloss Polyester	+1,340

Step 5. Base Finish

T1 _ _	Veneer Tier 1	+1,257
T2 _ _	Veneer Tier 2	+3,009
SL _ _	Satin Lacquer	+0
HG _ _	High Gloss Polyester	+5,802

Step 6. Power & Connectivity Access: Optional

DRHW	Drawer, Hardwired (layered edge only), Qty 8	+13,656
DRPI	Drawer, Plug In (layered edge only), Qty 8	+11,688
TMHW	Tabletop Metal lid, Hardwired, Qty 3	+14,271
TMPI	Tabletop Metal lid, Plug In, Qty 3	+12,603
TWHW	Tabletop Wood lid, Hardwired (veneer tops only), Qty 3	+12,678
TWPI	Tabletop Wood lid, Plug In (veneer tops only), Qty 3	+10,950
UMHW	Undermount, Hardwired, Qty 8	+8,152
UMPI	Undermount, Plug In, Qty 8	+5,928

Step 7. Microphone and/or Grommet Accommodations: Optional

MA _ _	Microphone hole (factory cut)	Qty _ _ x 321 each
GM _ _	2” Grommet Hole (factory cut), liner, lid, in matching metal finish	Qty _ _ x 423 each

Please consult **page 7** for the palette of DatesWeiser finishes. Natural stone, non-standard glass and veneer, and other technology options are available. Please email **customerservice@datesweiser.com** for a custom quote. Consult technical information on **page 294** for construction details and technical information.

Highline Fifty Rectangular Conference Table

72”x204”/ 16 Person
03R72X204

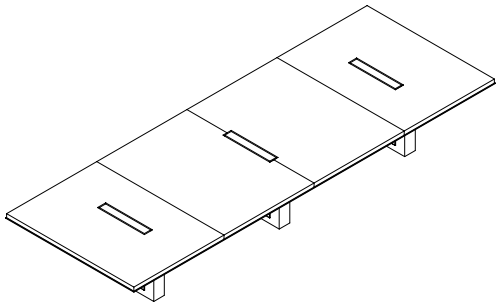

Starting Price: $36,964

72x204 table, slab veneer Tier 1 top, open painted base with no metal trim, powder coat finish

Pattern Number: 03R72X204

Step 1. Top Material

S	Slab (veneer only)
V	Veneer layered
G	Glass layered
C	Corian layered
Q	Caesarstone layered

Step 2. Base Options

ON	Open Base, no metal trim	+ 0
MC _ _	Open Base, MC metal trim	+5,808
PM01	Open Base, PM01 metal trim	+6,053
PM02	Open Base, PM02 metal trim	+6,053
PM03	Open Base, PM03 metal trim	+8,169

Step 3. Metal Edge Finish

MC _ _	Powder Coat	+0
PM01	Polished Chrome	+1,882
PM02	Satin Nickel	+628
PM03	Oil Rubbed Bronze	+984

Step 4A. Top Finish

T1 _ _	Veneer Tier 1	+0
T2 _ _	Veneer Tier 2	+2,246
GC _ _	Clear Glass, back painted	+10,098
GE _ _	Etched matte Glass, back painted	+12,138
CS01	Corian Glacier White	+14,790
QS _ _	Caesarstone	+38,250

Step 4B. Lower Layer Finish (Layer top only)

SL _ _	Satin Lacquer	+942
T _ _ _	Veneer Tier 1, 2, 3	+1,284
HG _ _	High Gloss Polyester	+1,413

Step 5. Base Finish

T1 _ _	Veneer Tier 1	+1,257
T2 _ _	Veneer Tier 2	+3,009
SL _ _	Satin Lacquer	+0
HG _ _	High Gloss Polyester	+5,802

Step 6. Power & Connectivity Access: Optional

DRHW	Drawer, Hardwired (layered edge only), Qty 8	+13,656
DRPI	Drawer, Plug In (layered edge only), Qty 8	+11,688
TMHW	Tabletop Metal lid, Hardwired, Qty 3	+14,271
TMPI	Tabletop Metal lid, Plug In, Qty 3	+12,603
TWHW	Tabletop Wood lid, Hardwired (veneer tops only), Qty 3	+12,678
TWPI	Tabletop Wood lid, Plug In (veneer tops only), Qty 3	+10,950
UMHW	Undermount, Hardwired, Qty 8	+8,152
UMPI	Undermount, Plug In, Qty 8	+5,928

Step 7. Microphone and/or Grommet Accommodations: Optional

MA _ _	Microphone hole (factory cut)	Qty _ _ x 321 each
GM _ _	2” Grommet Hole (factory cut), liner, lid, in matching metal finish	Qty _ _ x 423 each

Please consult **page 7** for the palette of DatesWeiser finishes. Natural stone, non-standard glass and veneer, and other technology options are available. Please email **customerservice@datesweiser.com** for a custom quote. Consult technical information on **page 294** for construction details and technical information.

Highline Fifty Rectangular Conference Table

72”x216”/ 18 Person
03R72X216

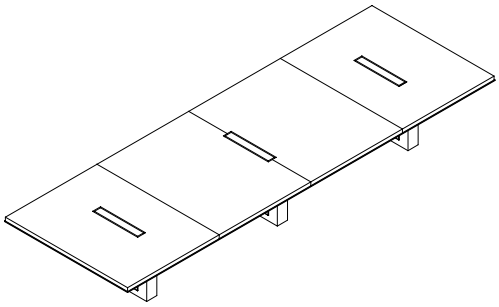

Starting Price: $38,099

72x216 table, slab veneer Tier 1 top, open painted base with no metal trim, powder coat finish

Pattern Number: 03R72X216

Step 1. Top Material

S	Slab (veneer only)
V	Veneer layered
G	Glass layered
C	Corian layered
Q	Caesarstone layered

Step 2. Base Options

ON	Open Base, no metal trim	+ 0
MC _ _	Open Base, MC metal trim	+5,808
PM01	Open Base, PM01 metal trim	+6,053
PM02	Open Base, PM02 metal trim	+6,053
PM03	Open Base, PM03 metal trim	+8,169

Step 3. Metal Edge Finish

MC _ _	Powder Coat	+0
PM01	Polished Chrome	+1,882
PM02	Satin Nickel	+628
PM03	Oil Rubbed Bronze	+1,152

Step 4A. Top Finish

T1 _ _	Veneer Tier 1	+0
T2 _ _	Veneer Tier 2	+2,484
GC _ _	Clear Glass, back painted	+10,692
GE _ _	Etched matte Glass, back painted	+12,942
CS01	Corian Glacier White	+15,660
QS _ _	Caesarstone	+40,500

Step 4B. Lower Layer Finish (Layer top only)

SL _ _	Satin Lacquer	+987
T _ _ _	Veneer Tier 1, 2, 3	+1,350
HG _ _	High Gloss Polyester	+1,485

Step 5. Base Finish

T1 _ _	Veneer Tier 1	+1,257
T2 _ _	Veneer Tier 2	+3,009
SL _ _	Satin Lacquer	+0
HG _ _	High Gloss Polyester	+5,802

Step 6. Power & Connectivity Access: Optional

DRHW	Drawer, Hardwired (layered edge only), Qty 8	+13,656
DRPI	Drawer, Plug In (layered edge only), Qty 8	+11,688
TMHW	Tabletop Metal lid, Hardwired, Qty 3	+14,271
TMPI	Tabletop Metal lid, Plug In, Qty 3	+12,603
TWHW	Tabletop Wood lid, Hardwired (veneer tops only), Qty 3	+12,678
TWPI	Tabletop Wood lid, Plug In (veneer tops only), Qty 3	+10,950
UMHW	Undermount, Hardwired, Qty 8	+8,152
UMPI	Undermount, Plug In, Qty 8	+5,928

Step 7. Microphone and/or Grommet Accommodations: Optional

MA _ _	Microphone hole (factory cut)	Qty _ _ x 321 each
GM _ _	2” Grommet Hole (factory cut), liner, lid, in matching metal finish	Qty _ _ x 423 each

Please consult **page 7** for the palette of DatesWeiser finishes. Natural stone, non-standard glass and veneer, and other technology options are available. Please email **customerservice@datesweiser.com** for a custom quote. Consult technical information on **page 294** for construction details and technical information.

Highline Fifty Rectangular Conference Table

72”x228”/ 18 Person
03R72X228

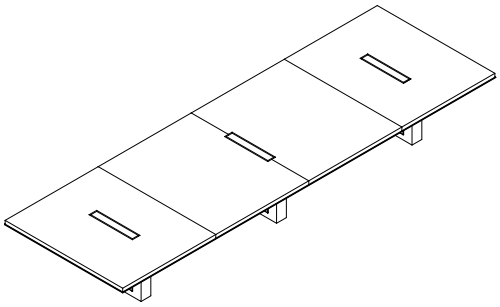

Starting Price: $39,259

72x228 table, slab veneer Tier 1 top, open painted base with no metal trim, powder coat finish

Pattern Number: 03R72X228

Step 1. Top Material

S	Slab (veneer only)
V	Veneer layered
G	Glass layered
C	Corian layered
Q	Caesarstone layered

Step 2. Base Options

ON	Open Base, no metal trim	+ 0
MC _ _	Open Base, MC metal trim	+5,808
PM01	Open Base, PM01 metal trim	+6,053
PM02	Open Base, PM02 metal trim	+6,053
PM03	Open Base, PM03 metal trim	+8,169

Step 3. Metal Edge Finish

MC _ _	Powder Coat	+0
PM01	Polished Chrome	+1,882
PM02	Satin Nickel	+628
PM03	Oil Rubbed Bronze	+984

Step 4A. Top Finish

T1 _ _	Veneer Tier 1	+0
T2 _ _	Veneer Tier 2	+2,622
GC _ _	Clear Glass, back painted	+11,286
GE _ _	Etched matte Glass, back painted	+13,566
CS01	Corian Glacier White	+16,530
QS _ _	Caesarstone*	+42,750

Step 4B. Lower Layer Finish (Layer top only)

SL _ _	Satin Lacquer	+1,030
T _ _ _	Veneer Tier 1, 2, 3	+1,411
HG _ _	High Gloss Polyester	+1,552

Step 5. Base Finish

T1 _ _	Veneer Tier 1	+1,257
T2 _ _	Veneer Tier 2	+3,009
SL _ _	Satin Lacquer	+0
HG _ _	High Gloss Polyester	+5,802

Step 6. Power & Connectivity Access: Optional

DRHW	Drawer, Hardwired (layered edge only), Qty 8	+13,656
DRPI	Drawer, Plug In (layered edge only), Qty 8	+11,688
TMHW	Tabletop Metal lid, Hardwired, Qty 3	+14,271
TMPI	Tabletop Metal lid, Plug In, Qty 3	+12,603
TWHW	Tabletop Wood lid, Hardwired (veneer tops only), Qty 3	+12,678
TWPI	Tabletop Wood lid, Plug In (veneer tops only), Qty 3	+10,950
UMHW	Undermount, Hardwired, Qty 8	+8,152
UMPI	Undermount, Plug In, Qty 8	+5,928

Step 7. Microphone and/or Grommet Accommodations: Optional

MA _ _	Microphone hole (factory cut)	Qty _ _ x 321 each
GM _ _	2” Grommet Hole (factory cut), liner, lid, in matching metal finish	Qty _ _ x 423 each

Please consult **page 7** for the palette of DatesWeiser finishes. Natural stone, non-standard glass and veneer, and other technology options are available. Please email **customerservice@datesweiser.com** for a custom quote. Consult technical information on **page 294** for construction details and technical information.

*Tables with a Caesarstone finish require a 5-section top.

Highline Fifty Rectangular Conference Table

72”x240”/ 20 Person
03R72X240

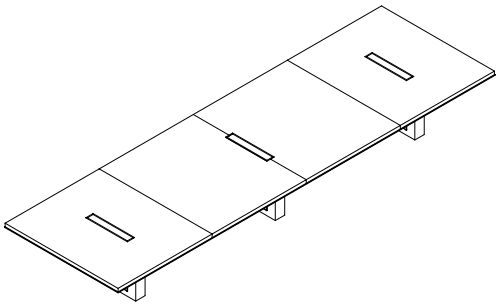

Starting Price: $41,764

72x240 table, slab veneer Tier 1 top, open painted base with no metal trim, powder coat finish

Pattern Number: 03R72X240

Step 1. Top Material

S	Slab (veneer only)
V	Veneer layered
G	Glass layered
C	Corian layered
Q	Caesarstone layered

Step 2. Base Options

ON	Open Base, no metal trim	+ 0
MC _ _	Open Base, MC metal trim	+5,808
PM01	Open Base, PM01 metal trim	+6,053
PM02	Open Base, PM02 metal trim	+6,053
PM03	Open Base, PM03 metal trim	+8,169

Step 3. Metal Edge Finish

MC _ _	Powder Coat	+0
PM01	Polished Chrome	+1,882
PM02	Satin Nickel	+682
PM03	Oil Rubbed Bronze	+984

Step 4A. Top Finish

T1 _ _	Veneer Tier 1	+0
T2 _ _	Veneer Tier 2	+2,760
GC _ _	Clear Glass, back painted	+11,880
GE _ _	Etched matte Glass, back painted	+14,280
CS01	Corian Glacier White	+17,500
QS _ _	Caesarstone*	+45,000

Step 4B. Lower Layer Finish (Layer top only)

SL _ _	Satin Lacquer	+1,146
T _ _ _	Veneer Tier 1, 2, 3	+1,482
HG _ _	High Gloss Polyester	+1,632

Step 5. Base Finish

T1 _ _	Veneer Tier 1	+1,257
T2 _ _	Veneer Tier 2	+3,009
SL _ _	Satin Lacquer	+0
HG _ _	High Gloss Polyester	+5,802

Step 6. Power & Connectivity Access: Optional

DRHW	Drawer, Hardwired (layered edge only), Qty 10	+17,070
DRPI	Drawer, Plug In (layered edge only), Qty 10	+14,610
TMHW	Tabletop Metal lid, Hardwired, Qty 3	+14,271
TMPI	Tabletop Metal lid, Plug In, Qty 3	+12,603
TWHW	Tabletop Wood lid, Hardwired (veneer tops only), Qty 3	+12,678
TWPI	Tabletop Wood lid, Plug In (veneer tops only), Qty 3	+10,950
UMHW	Undermount, Hardwired, Qty 10	+10,190
UMPI	Undermount, Plug In, Qty 10	+7,410

Step 7. Microphone and/or Grommet Accommodations: Optional

MA _ _	Microphone hole (factory cut)	Qty _ _ x 321 each
GM _ _	2” Grommet Hole (factory cut), liner, lid, in matching metal finish	Qty _ _ x 423 each

Please consult **page 7** for the palette of DatesWeiser finishes. Natural stone, non-standard glass and veneer, and other technology options are available. Please email **customerservice@datesweiser.com** for a custom quote. Consult technical information on **page 294** for construction details and technical information.

*Tables with a Caesarstone finish require a 5-section top.

Highline Fifty Boat Tables Index

48″–72″ width

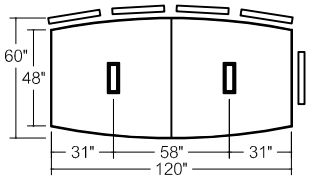

03B60X120
10 Person Table

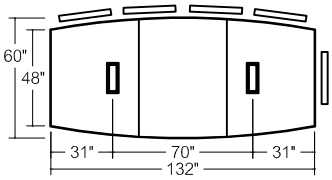

03B60X132
10 Person Table

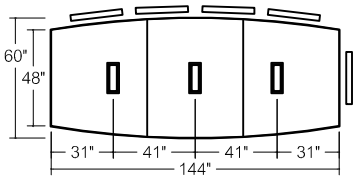

03B60X144
10 Person Table

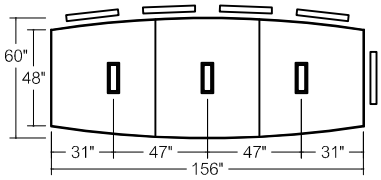

03B60X156
10 Person Table

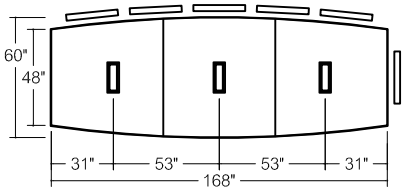

03B60X168
12 Person Table

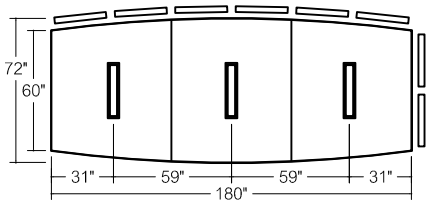

03B72X180
16 Person Table

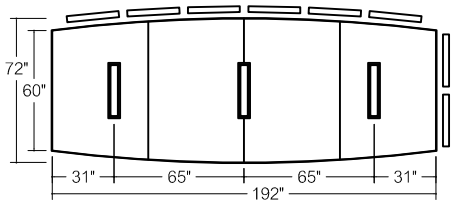

03B72X192
16 Person Table

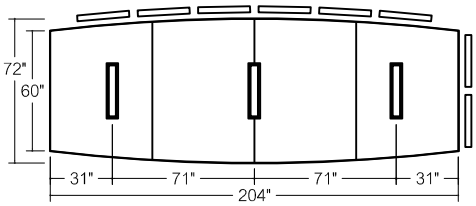

03B72X204
16 Person Table

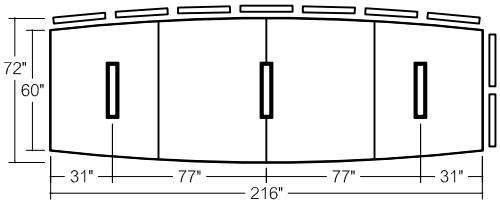

03B72X216
18 Person Table

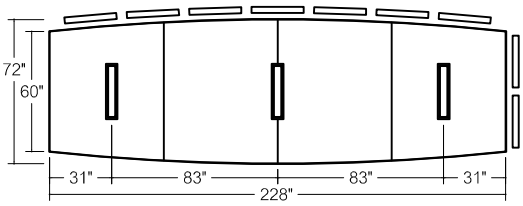

03B72X228
18 Person Table

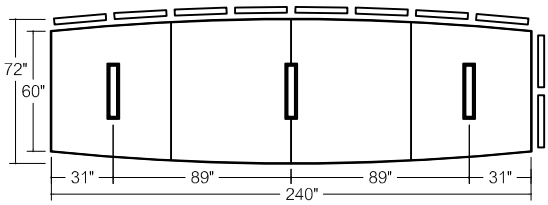

03B72X240
20 Person Table

Highline Fifty Boat Conference Table

60”x120”/ 10 Person
03B60X120

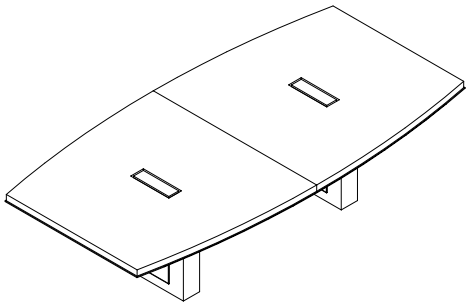

Starting Price: $23,874

60x120 table, slab veneer Tier 1 top, open painted base with no metal trim, powder coat finish

Pattern Number: 03B60X120

Step 1. Top Material	
S	Slab (veneer only)
V	Veneer layered
G	Glass layered
C	Corian layered
Q	Caesarstone layered

Step 2. Base Options		
ON	Open Base, no metal trim	+ 0
MC _ _	Open Base, MC metal trim	+3,872
PM01	Open Base, PM01 metal trim	+4,035
PM02	Open Base, PM02 metal trim	+4,035
PM03	Open Base, PM03 metal trim	+5,446

Step 3. Metal Edge Finish		
MC _ _	Powder Coat	+0
PM01	Polished Chrome	+3,602
PM02	Satin Nickel	+3,923
PM03	Oil Rubbed Bronze	+6,990

Step 4A. Top Finish		
T1 _ _	Veneer Tier 1	+0
T2 _ _	Veneer Tier 2	+1,150
GC _ _	Clear Glass, back painted	+7,500
GE _ _	Etched matte Glass, back painted	+9,000
CS01	Corian Glacier White	+12,000
QS _ _	Caesarstone	+23,750

Step 4B. Lower Layer Finish (Layer top only)		
SL _ _	Satin Lacquer	+556
T _ _ _	Veneer Tier 1, 2, 3	+821
HG _ _	High Gloss Polyester	+903

Step 5. Base Finish		
T1 _ _	Veneer Tier 1	+750
T2 _ _	Veneer Tier 2	+1,576
SL _ _	Satin Lacquer	+0
HG _ _	High Gloss Polyester	+3,438

Step 6. Power & Connectivity Access: Optional		
DRHW	Drawer, Hardwired (layered edge only), Qty 6	+10,242
DRPI	Drawer, Plug In (layered edge only), Qty 6	+8,766
TMHW	Tabletop Metal lid, Hardwired, Qty 2	+7,492
TMPI	Tabletop Metal lid, Plug In, Qty 2	+6,382
TWHW	Tabletop Wood lid, Hardwired (veneer tops only), Qty 2	+7,492
TWPI	Tabletop Wood lid, Plug In (veneer tops only), Qty 2	+6,382
UMHW	Undermount, Hardwired, Qty 6	+6,114
UMPI	Undermount, Plug In, Qty 6	+4,446

Step 7. Microphone and/or Grommet Accommodations: Optional		
MA _ _	Microphone hole (factory cut)	Qty _ _ x 321 each
GM _ _	2” Grommet Hole (factory cut), liner, lid, in matching metal finish	Qty _ _ x 423 each

Please consult **page 7** for the palette of DatesWeiser finishes. Natural stone, non-standard glass and veneer, and other technology options are available. Please email **customerservice@datesweiser.com** for a custom quote. Consult technical information on **page 294** for construction details and technical information.

Highline Fifty Boat Conference Table

60”x132”/ 10 Person
03B60X132

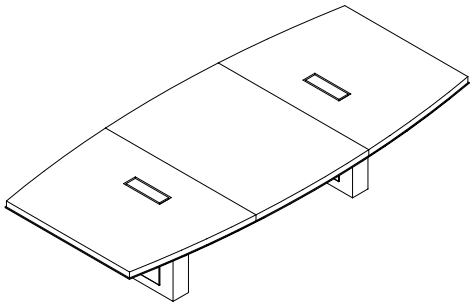

Starting Price: $29,142

60x132 table, slab veneer Tier 1 top, open painted base with no metal trim, powder coat finish

Pattern Number: 03B60X132

Step 1. Top Material	
S	Slab (veneer only)
V	Veneer layered
G	Glass layered
C	Corian layered
Q	Caesarstone layered

Step 2. Base Options		
ON	Open Base, no metal trim	+ 0
MC _ _	Open Base, MC metal trim	+3,872
PM01	Open Base, PM01 metal trim	+4,035
PM02	Open Base, PM02 metal trim	+4,035
PM03	Open Base, PM03 metal trim	+5,445

Step 3. Metal Edge Finish		
MC _ _	Powder Coat	+0
PM01	Polished Chrome	+4,235
PM02	Satin Nickel	+4,557
PM03	Oil Rubbed Bronze	+8,512

Step 4A. Top Finish		
T1 _ _	Veneer Tier 1	+0
T2 _ _	Veneer Tier 2	+1,265
GC _ _	Clear Glass, back painted	+8,250
GE _ _	Etched matte Glass, back painted	+9,900
CS01	Corian Glacier White	+13,200
QS _ _	Caesarstone	+26,125

Step 4B. Lower Layer Finish (Layer top only)		
SL _ _	Satin Lacquer	+623
T _ _ _	Veneer Tier 1, 2, 3	+832
HG _ _	High Gloss Polyester	+916

Step 5. Base Finish		
T1 _ _	Veneer Tier 1	+750
T2 _ _	Veneer Tier 2	+1,576
SL _ _	Satin Lacquer	+0
HG _ _	High Gloss Polyester	+3,438

Step 6. Power & Connectivity Access: Optional		
DRHW	Drawer, Hardwired (layered edge only), Qty 6	+10,242
DRPI	Drawer, Plug In (layered edge only), Qty 6	+8,766
TMHW	Tabletop Metal lid, Hardwired, Qty 2	+7,492
TMPI	Tabletop Metal lid, Plug In, Qty 2	+6,382
TWHW	Tabletop Wood lid, Hardwired (veneer tops only), Qty 2	+7,492
TWPI	Tabletop Wood lid, Plug In (veneer tops only), Qty 2	+6,382
UMHW	Undermount, Hardwired, Qty 6	+6,114
UMPI	Undermount, Plug In, Qty 6	+4,446

Step 7. Microphone and/or Grommet Accommodations: Optional		
MA _ _	Microphone hole (factory cut)	Qty _ _ x 321 each
GM _ _	2” Grommet Hole (factory cut), liner, lid, in matching metal finish	Qty _ _ x 423 each

Please consult **page 7** for the palette of DatesWeiser finishes. Natural stone, non-standard glass and veneer, and other technology options are available. Please email **customerservice@datesweiser.com** for a custom quote. Consult technical information on **page 294** for construction details and technical information.

Highline Fifty Boat Conference Table

60”x144”/ 10 Person
03B60X144

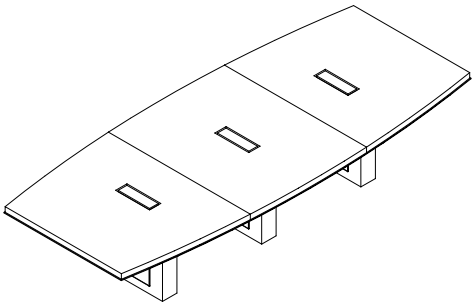

Starting Price: $30,659

60x144 table, slab veneer Tier 1 top, open painted base with no metal trim, powder coat finish

Pattern Number: 03B60X144

Step 1. Top Material	
S	Slab (veneer only)
V	Veneer layered
G	Glass layered
C	Corian layered
Q	Caesarstone layered

Step 2. Base Options		
ON	Open Base, no metal trim	+ 0
MC _ _	Open Base, MC metal trim	+5,808
PM01	Open Base, PM01 metal trim	+6,053
PM02	Open Base, PM02 metal trim	+6,053
PM03	Open Base, PM03 metal trim	+8,169

Step 3. Metal Edge Finish		
MC _ _	Powder Coat	+0
PM01	Polished Chrome	+5,076
PM02	Satin Nickel	+5,559
PM03	Oil Rubbed Bronze	+9,726

Step 4A. Top Finish		
T1 _ _	Veneer Tier 1	+0
T2 _ _	Veneer Tier 2	+1,380
GC _ _	Clear Glass, back painted	+9,000
GE _ _	Etched matte Glass, back painted	+10,800
CS01	Corian Glacier White	+14,400
QS _ _	Caesarstone	+28,500

Step 4B. Lower Layer Finish (Layer top only)		
SL _ _	Satin Lacquer	+666
T _ _ _	Veneer Tier 1, 2, 3	+893
HG _ _	High Gloss Polyester	+982

Step 5. Base Finish		
T1 _ _	Veneer Tier 1	+1,125
T2 _ _	Veneer Tier 2	+2,364
SL _ _	Satin Lacquer	+0
HG _ _	High Gloss Polyester	+5,157

Step 6. Power & Connectivity Access: Optional		
DRHW	Drawer, Hardwired (layered edge only), Qty 6	+10,242
DRPI	Drawer, Plug In (layered edge only), Qty 6	+8,766
TMHW	Tabletop Metal lid, Hardwired, Qty 3	+14,271
TMPI	Tabletop Metal lid, Plug In, Qty 3	+12,603
TWHW	Tabletop Wood lid, Hardwired (veneer tops only), Qty 3	+11,238
TWPI	Tabletop Wood lid, Plug In (veneer tops only), Qty 3	+9,573
UMHW	Undermount, Hardwired, Qty 6	+6,114
UMPI	Undermount, Plug In, Qty 6	+4,446

Step 7. Microphone and/or Grommet Accommodations: Optional		
MA _ _	Microphone hole (factory cut)	Qty _ _ x 321 each
GM _ _	2” Grommet Hole (factory cut), liner, lid, in matching metal finish	Qty _ _ x 423 each

Please consult **page 7** for the palette of DatesWeiser finishes. Natural stone, non-standard glass and veneer, and other technology options are available. Please email **customerservice@datesweiser.com** for a custom quote. Consult technical information on **page 294** for construction details and technical information.

Highline Fifty Boat Conference Table

60”x156”/ 10 Person
03B60X156

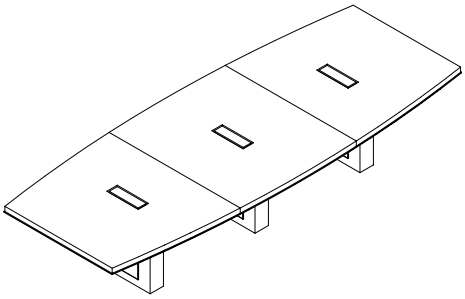

Starting Price: $31,786

60x156 table, slab veneer Tier 1 top, open painted base with no metal trim, powder coat finish

Pattern Number: 03B60X156

Step 1. Top Material

S	Slab (veneer only)
V	Veneer layered
G	Glass layered
C	Corian layered
Q	Caesarstone layered

Step 2. Base Options

ON	Open Base, no metal trim	+ 0
MC _ _	Open Base, MC metal trim	+5,808
PM01	Open Base, PM01 metal trim	+6,053
PM02	Open Base, PM02 metal trim	+6,053
PM03	Open Base, PM03 metal trim	+8,169

Step 3. Metal Edge Finish

MC _ _	Powder Coat	+0
PM01	Polished Chrome	+5,076
PM02	Satin Nickel	+5,559
PM03	Oil Rubbed Bronze	+9,726

Step 4A. Top Finish

T1 _ _	Veneer Tier 1	+0
T2 _ _	Veneer Tier 2	+1,495
GC _ _	Clear Glass, back painted	+9,750
GE _ _	Etched matte Glass, back painted	+11,700
CS01	Corian Glacier White	+15,600
QS _ _	Caesarstone	+30,875

Step 4B. Lower Layer Finish (Layer top only)

SL _ _	Satin Lacquer	+744
T _ _ _	Veneer Tier 1, 2, 3	+990
HG _ _	High Gloss Polyester	+1,089

Step 5. Base Finish

T1 _ _	Veneer Tier 1	+1,125
T2 _ _	Veneer Tier 2	+2,364
SL _ _	Satin Lacquer	+0
HG _ _	High Gloss Polyester	+5,157

Step 6. Power & Connectivity Access: Optional

DRHW	Drawer, Hardwired (layered edge only), Qty 6	+10,242
DRPI	Drawer, Plug In (layered edge only), Qty 6	+8,766
TMHW	Tabletop Metal lid, Hardwired, Qty 3	+14,271
TMPI	Tabletop Metal lid, Plug In, Qty 3	+12,603
TWHW	Tabletop Wood lid, Hardwired (veneer tops only), Qty 3	+11,238
TWPI	Tabletop Wood lid, Plug In (veneer tops only), Qty 3	+9,573
UMHW	Undermount, Hardwired, Qty 6	+6,114
UMPI	Undermount, Plug In, Qty 6	+4,446

Step 7. Microphone and/or Grommet Accommodations: Optional

MA _ _	Microphone hole (factory cut)	Qty _ _ x 321 each
GM _ _	2” Grommet Hole (factory cut), liner, lid, in matching metal finish	Qty _ _ x 423 each

Please consult **page 7** for the palette of DatesWeiser finishes. Natural stone, non-standard glass and veneer, and other technology options are available. Please email **customerservice@datesweiser.com** for a custom quote. Consult technical information on **page 294** for construction details and technical information.

Highline Fifty Boat Conference Table

60”x168”/ 12 Person
03B60X168

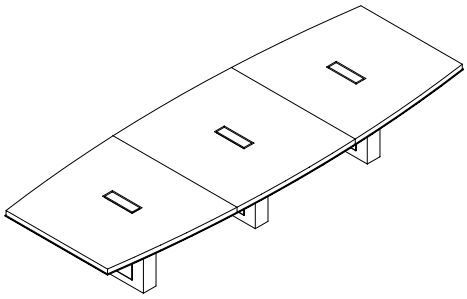

Starting Price: $32,931

60x168 table, slab veneer Tier 1 top, open painted base with no metal trim, powder coat finish

Pattern Number: 03B60X168

Step 1. Top Material

S	Slab (veneer only)
V	Veneer layered
G	Glass layered
C	Corian layered
Q	Caesarstone layered

Step 2. Base Options

ON	Open Base, no metal trim	+ 0
MC _ _	Open Base, MC metal trim	+5,808
PM01	Open Base, PM01 metal trim	+6,053
PM02	Open Base, PM02 metal trim	+6,053
PM03	Open Base, PM03 metal trim	+8,169

Step 3. Metal Edge Finish

MC _ _	Powder Coat	+0
PM01	Polished Chrome	+5,076
PM02	Satin Nickel	+5,559
PM03	Oil Rubbed Bronze	+9,726

Step 4A. Top Finish

T1 _ _	Veneer Tier 1	+0
T2 _ _	Veneer Tier 2	+1,610
GC _ _	Clear Glass, back painted	+10,500
GE _ _	Etched matte Glass, back painted	+12,600
CS01	Corian Glacier White	+16,800
QS _ _	Caesarstone	+33,250

Step 4B. Lower Layer Finish (Layer top only)

SL _ _	Satin Lacquer	+821
T _ _ _	Veneer Tier 1, 2, 3	+1,113
HG _ _	High Gloss Polyester	+1,225

Step 5. Base Finish

T1 _ _	Veneer Tier 1	+1,125
T2 _ _	Veneer Tier 2	+2,364
SL _ _	Satin Lacquer	+0
HG _ _	High Gloss Polyester	+5,157

Step 6. Power & Connectivity Access: Optional

DRHW	Drawer, Hardwired (layered edge only), Qty 6	+10,242
DRPI	Drawer, Plug In (layered edge only), Qty 6	+8,766
TMHW	Tabletop Metal lid, Hardwired, Qty 3	+14,271
TMPI	Tabletop Metal lid, Plug In, Qty 3	+12,603
TWHW	Tabletop Wood lid, Hardwired (veneer tops only), Qty 3	+11,238
TWPI	Tabletop Wood lid, Plug In (veneer tops only), Qty 3	+9,573
UMHW	Undermount, Hardwired, Qty 6	+6,114
UMPI	Undermount, Plug In, Qty 6	+4,446

Step 7. Microphone and/or Grommet Accommodations: Optional

MA _ _	Microphone hole (factory cut)	Qty _ _ x 321 each
GM _ _	2” Grommet Hole (factory cut), liner, lid, in matching metal finish	Qty _ _ x 423 each

Please consult **page 7** for the palette of DatesWeiser finishes. Natural stone, non-standard glass and veneer, and other technology options are available. Please email **customerservice@datesweiser.com** for a custom quote. Consult technical information on **page 294** for construction details and technical information.

Highline Fifty Boat Conference Table

72”x180”/ 16 Person
03B72X180

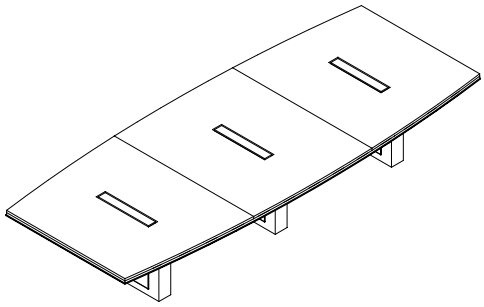

Starting Price: $37,965

72x180 table, slab veneer Tier 1 top, open painted base with no metal trim, powder coat finish

Pattern Number: 03B72X180

Step 1. Top Material

S	Slab (veneer only)
V	Veneer layered
G	Glass layered
C	Corian layered
Q	Caesarstone layered

Step 2. Base Options

ON	Open Base, no metal trim	+ 0
MC _ _	Open Base, MC metal trim	+5,808
PM01	Open Base, PM01 metal trim	+6,053
PM02	Open Base, PM02 metal trim	+6,053
PM03	Open Base, PM03 metal trim	+8,169

Step 3. Metal Edge Finish

MC _ _	Powder Coat	+0
PM01	Polished Chrome	+6,222
PM02	Satin Nickel	+6,681
PM03	Oil Rubbed Bronze	+11,472

Step 4A. Top Finish

T1 _ _	Veneer Tier 1	+0
T2 _ _	Veneer Tier 2	+2,070
GC _ _	Clear Glass, back painted	+13,500
GE _ _	Etched matte Glass, back painted	+16,200
CS01	Corian Glacier White	+21,600
QS _ _	Caesarstone*	+42,750

Step 4B. Lower Layer Finish (Layer top only)

SL _ _	Satin Lacquer	+926
T _ _ _	Veneer Tier 1, 2, 3	+1,290
HG _ _	High Gloss Polyester	+1,418

Step 5. Base Finish

T1 _ _	Veneer Tier 1	+1,257
T2 _ _	Veneer Tier 2	+3,009
SL _ _	Satin Lacquer	+0
HG _ _	High Gloss Polyester	+5,802

Step 6. Power & Connectivity Access: Optional

DRHW	Drawer, Hardwired (layered edge only), Qty 8	+13,656
DRPI	Drawer, Plug In (layered edge only), Qty 8	+11,688
TMHW	Tabletop Metal lid, Hardwired, Qty 3	+14,271
TMPI	Tabletop Metal lid, Plug In, Qty 3	+12,603
TWHW	Tabletop Wood lid, Hardwired (veneer tops only), Qty 3	+8,452
TWPI	Tabletop Wood lid, Plug In (veneer tops only), Qty 3	+7,300
UMHW	Undermount, Hardwired, Qty 8	+8,152
UMPI	Undermount, Plug In, Qty 8	+5,928

Step 7. Microphone and/or Grommet Accommodations: Optional

MA _ _	Microphone hole (factory cut)	Qty _ _ x 321 each
GM _ _	2” Grommet Hole (factory cut), liner, lid, in matching metal finish	Qty _ _ x 423 each

Please consult **page 7** for the palette of DatesWeiser finishes. Natural stone, non-standard glass and veneer, and other technology options are available. Please email **customerservice@datesweiser.com** for a custom quote. Consult technical information on **page 294** for construction details and technical information.

*Tables with a Caesarstone finish require a 4-section top.

Highline Fifty Boat Conference Table

72”x192”/ 16 Person
03B72X192

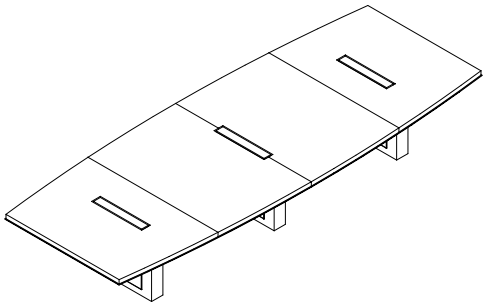

Starting Price: $42,776

72x192 table, slab veneer Tier 1 top, open painted base with no metal trim, powder coat finish

Pattern Number: 03B72X192

Step 1. Top Material

S	Slab (veneer only)
V	Veneer layered
G	Glass layered
C	Corian layered
Q	Caesarstone layered

Step 2. Base Options

ON	Open Base, no metal trim	+ 0
MC _ _	Open Base, MC metal trim	+5,808
PM01	Open Base, PM01 metal trim	+6,053
PM02	Open Base, PM02 metal trim	+6,053
PM03	Open Base, PM03 metal trim	+8,169

Step 3. Metal Edge Finish

MC _ _	Powder Coat	+0
PM01	Polished Chrome	+6,222
PM02	Satin Nickel	+6,681
PM03	Oil Rubbed Bronze	+11,472

Step 4A. Top Finish

T1 _ _	Veneer Tier 1	+0
T2 _ _	Veneer Tier 2	+2,208
GC _ _	Clear Glass, back painted	+14,400
GE _ _	Etched matte Glass, back painted	+17,280
CS01	Corian Glacier White	+23,040
QS _ _	Caesarstone	+45,600

Step 4B. Lower Layer Finish (Layer top only)

SL _ _	Satin Lacquer	+1,003
T _ _ _	Veneer Tier 1, 2, 3	+1,301
HG _ _	High Gloss Polyester	+1,431

Step 5. Base Finish

T1 _ _	Veneer Tier 1	+1,257
T2 _ _	Veneer Tier 2	+3,009
SL _ _	Satin Lacquer	+0
HG _ _	High Gloss Polyester	+5,802

Step 6. Power & Connectivity Access: Optional

DRHW	Drawer, Hardwired (layered edge only), Qty 8	+13,656
DRPI	Drawer, Plug In (layered edge only), Qty 8	+11,688
TMHW	Tabletop Metal lid, Hardwired, Qty 3	+14,271
TMPI	Tabletop Metal lid, Plug In, Qty 3	+12,603
TWHW	Tabletop Wood lid, Hardwired (veneer tops only), Qty 3	+8,452
TWPI	Tabletop Wood lid, Plug In (veneer tops only), Qty 3	+7,300
UMHW	Undermount, Hardwired, Qty 8	+8,152
UMPI	Undermount, Plug In, Qty 8	+5,928

Step 7. Microphone and/or Grommet Accommodations: Optional

MA _ _	Microphone hole (factory cut)	Qty _ _ x 321 each
GM _ _	2” Grommet Hole (factory cut), liner, lid, in matching metal finish	Qty _ _ x 423 each

Please consult **page 7** for the palette of DatesWeiser finishes. Natural stone, non-standard glass and veneer, and other technology options are available. Please email **customerservice@datesweiser.com** for a custom quote. Consult technical information on **page 294** for construction details and technical information.

Highline Fifty Boat Conference Table

72”x204”/ 16 Person
03B72X204

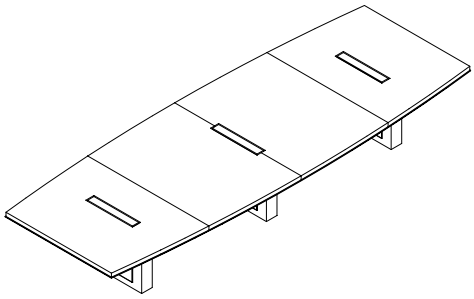

Starting Price: $44,115

72x204 table, slab veneer Tier 1 top, open painted base with no metal trim, powder coat finish

Pattern Number: 03B72X204

Step 1. Top Material

S	Slab (veneer only)
V	Veneer layered
G	Glass layered
C	Corian layered
Q	Caesarstone layered

Step 2. Base Options

ON	Open Base, no metal trim	+ 0
MC _ _	Open Base, MC metal trim	+5,808
PM01	Open Base, PM01 metal trim	+6,053
PM02	Open Base, PM02 metal trim	+6,053
PM03	Open Base, PM03 metal trim	+8,169

Step 3. Metal Edge Finish

MC _ _	Powder Coat	+0
PM01	Polished Chrome	+6,681
PM02	Satin Nickel	+7,140
PM03	Oil Rubbed Bronze	+12,847

Step 4A. Top Finish

T1 _ _	Veneer Tier 1	+0
T2 _ _	Veneer Tier 2	+2,346
GC _ _	Clear Glass, back painted	+15,300
GE _ _	Etched matte Glass, back painted	+18,360
CS01	Corian Glacier White	+24,480
QS _ _	Caesarstone	+48,450

Step 4B. Lower Layer Finish (Layer top only)

SL _ _	Satin Lacquer	+1,097
T _ _ _	Veneer Tier 1, 2, 3	+1,454
HG _ _	High Gloss Polyester	+1,601

Step 5. Base Finish

T1 _ _	Veneer Tier 1	+1,257
T2 _ _	Veneer Tier 2	+3,009
SL _ _	Satin Lacquer	+0
HG _ _	High Gloss Polyester	+5,802

Step 6. Power & Connectivity Access: Optional

DRHW	Drawer, Hardwired (layered edge only), Qty 8	+13,656
DRPI	Drawer, Plug In (layered edge only), Qty 8	+11,688
TMHW	Tabletop Metal lid, Hardwired, Qty 3	+14,271
TMPI	Tabletop Metal lid, Plug In, Qty 3	+12,603
TWHW	Tabletop Wood lid, Hardwired (veneer tops only), Qty 3	+8,452
TWPI	Tabletop Wood lid, Plug In (veneer tops only), Qty 3	+7,300
UMHW	Undermount, Hardwired, Qty 8	+8,152
UMPI	Undermount, Plug In, Qty 8	+5,928

Step 7. Microphone and/or Grommet Accommodations: Optional

MA _ _	Microphone hole (factory cut)	Qty _ _ x 321 each
GM _ _	2” Grommet Hole (factory cut), liner, lid, in matching metal finish	Qty _ _ x 423 each

Please consult **page 7** for the palette of DatesWeiser finishes. Natural stone, non-standard glass and veneer, and other technology options are available. Please email **customerservice@datesweiser.com** for a custom quote. Consult technical information on **page 294** for construction details and technical information.

Highline Fifty Boat Conference Table

72”x216”/ 18 Person
03B72X216

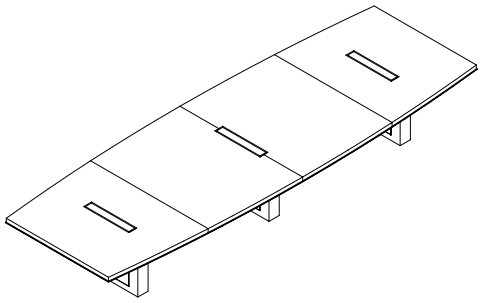

Starting Price: $45,553

72x216 table, slab veneer Tier 1 top, open painted base with no metal trim, powder coat finish

Pattern Number: 03B72X216

Step 1. Top Material

S	Slab (veneer only)
V	Veneer layered
G	Glass layered
C	Corian layered
Q	Caesarstone layered

Step 2. Base Options

ON	Open Base, no metal trim	+ 0
MC _ _	Open Base, MC metal trim	+5,808
PM01	Open Base, PM01 metal trim	+6,053
PM02	Open Base, PM02 metal trim	+6,053
PM03	Open Base, PM03 metal trim	+8,169

Step 3. Metal Edge Finish

MC _ _	Powder Coat	+0
PM01	Polished Chrome	+6,681
PM02	Satin Nickel	+7,140
PM03	Oil Rubbed Bronze	+12,847

Step 4A. Top Finish

T1 _ _	Veneer Tier 1	+0
T2 _ _	Veneer Tier 2	+2,484
GC _ _	Clear Glass, back painted	+16,200
GE _ _	Etched matte Glass, back painted	+19,440
CS01	Corian Glacier White	+25,920
QS _ _	Caesarstone	+51,300

Step 4B. Lower Layer Finish (Layer top only)

SL _ _	Satin Lacquer	+1,146
T _ _ _	Veneer Tier 1, 2, 3	+1,482
HG _ _	High Gloss Polyester	+1,632

Step 5. Base Finish

T1 _ _	Veneer Tier 1	+1,257
T2 _ _	Veneer Tier 2	+3,009
SL _ _	Satin Lacquer	+0
HG _ _	High Gloss Polyester	+5,802

Step 6. Power & Connectivity Access: Optional

DRHW	Drawer, Hardwired (layered edge only), Qty 8	+13,656
DRPI	Drawer, Plug In (layered edge only), Qty 8	+11,688
TMHW	Tabletop Metal lid, Hardwired, Qty 3	+14,271
TMPI	Tabletop Metal lid, Plug In, Qty 3	+12,603
TWHW	Tabletop Wood lid, Hardwired (veneer tops only), Qty 3	+8,452
TWPI	Tabletop Wood lid, Plug In (veneer tops only), Qty 3	+7,300
UMHW	Undermount, Hardwired, Qty 8	+8,152
UMPI	Undermount, Plug In, Qty 8	+5,928

Step 7. Microphone and/or Grommet Accommodations: Optional

MA _ _	Microphone hole (factory cut)	Qty _ _x 321 each
GM _ _	2” Grommet Hole (factory cut), liner, lid, in matching metal finish	Qty _ _ x 423 each

Please consult **page 7** for the palette of DatesWeiser finishes. Natural stone, non-standard glass and veneer, and other technology options are available. Please email **customerservice@datesweiser.com** for a custom quote. Consult technical information on **page 294** for construction details and technical information.

Highline Fifty Boat Conference Table

72”x228”/ 18 Person
03B72X228

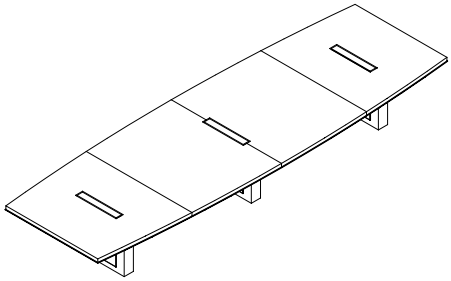

Starting Price: $48,985

72x228 table, slab veneer Tier 1 top, open painted base with no metal trim, powder coat finish

Pattern Number: 03B72X228

Step 1. Top Material

S	Slab (veneer only)
V	Veneer layered
G	Glass layered
C	Corian layered
Q	Caesarstone layered

Step 2. Base Options

ON	Open Base, no metal trim	+ 0
MC _ _	Open Base, MC metal trim	+5,808
PM01	Open Base, PM01 metal trim	+6,053
PM02	Open Base, PM02 metal trim	+6,053
PM03	Open Base, PM03 metal trim	+8,169

Step 3. Metal Edge Finish

MC _ _	Powder Coat	+0
PM01	Polished Chrome	+6,681
PM02	Satin Nickel	+7,140
PM03	Oil Rubbed Bronze	+12,847

Step 4A. Top Finish

T1 _ _	Veneer Tier 1	+0
T2 _ _	Veneer Tier 2	+2,622
GC _ _	Clear Glass, back painted	+17,100
GE _ _	Etched matte Glass, back painted	+20,520
CS01	Corian Glacier White	+27,360
QS _ _	Caesarstone*	+54,150

Step 4B. Lower Layer Finish (Layer top only)

SL _ _	Satin Lacquer	+1,152
T _ _ _	Veneer Tier 1, 2, 3	+1,565
HG _ _	High Gloss Polyester	+1,721

Step 5. Base Finish

T1 _ _	Veneer Tier 1	+1,257
T2 _ _	Veneer Tier 2	+3,009
SL _ _	Satin Lacquer	+0
HG _ _	High Gloss Polyester	+5,802

Step 6. Power & Connectivity Access: Optional

DRHW	Drawer, Hardwired (layered edge only), Qty 8	+13,656
DRPI	Drawer, Plug In (layered edge only), Qty 8	+11,688
TMHW	Tabletop Metal lid, Hardwired, Qty 3	+14,271
TMPI	Tabletop Metal lid, Plug In, Qty 3	+12,603
TWHW	Tabletop Wood lid, Hardwired (veneer tops only), Qty 3	+8,452
TWPI	Tabletop Wood lid, Plug In (veneer tops only), Qty 3	+2,300
UMHW	Undermount, Hardwired, Qty 8	+8,152
UMPI	Undermount, Plug In, Qty 8	+5,928

Step 7. Microphone and/or Grommet Accommodations: Optional

MA _ _	Microphone hole (factory cut)	Qty _ _ x 321 each
GM _ _	2” Grommet Hole (factory cut), liner, lid, in matching metal finish	Qty _ _ x 423 each

Please consult **page 7** for the palette of DatesWeiser finishes. Natural stone, non-standard glass and veneer, and other technology options are available. Please email **customerservice@datesweiser.com** for a custom quote. Consult technical information on **page 294** for construction details and technical information.

*Tables with a Caesarstone finish require a 5-section top.

Highline Fifty Boat Conference Table

72”x240”/ 20 Person
03B72X240

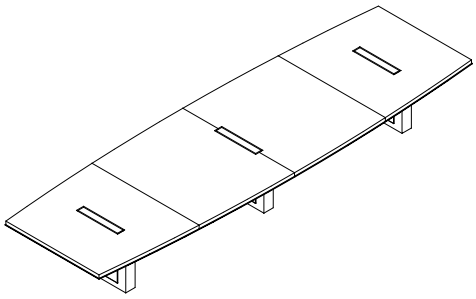

Starting Price: $50,255

72x240 table, slab veneer Tier 1 top, open painted base with no metal trim, powder coat finish

Pattern Number: 03B72X240

Step 1. Top Material

S	Slab (veneer only)
V	Veneer layered
G	Glass layered
C	Corian layered
Q	Caesarstone layered

Step 2. Base Options

ON	Open Base, no metal trim	+ 0
MC _ _	Open Base, MC metal trim	+5,808
PM01	Open Base, PM01 metal trim	+6,053
PM02	Open Base, PM02 metal trim	+6,053
PM03	Open Base, PM03 metal trim	+8,169

Step 3. Metal Edge Finish

MC _ _	Powder Coat	+0
PM01	Polished Chrome	+6,681
PM02	Satin Nickel	+7,140
PM03	Oil Rubbed Bronze	+12,847

Step 4A. Top Finish

T1 _ _	Veneer Tier 1	+0
T2 _ _	Veneer Tier 2	+2,760
GC _ _	Clear Glass, back painted	+18,000
GE _ _	Etched matte Glass, back painted	+21,600
CS01	Corian Glacier White	+28,800
QS _ _	Caesarstone*	+57,000

Step 4B. Lower Layer Finish (Layer top only)

SL _ _	Satin Lacquer	+1,250
T _ _ _	Veneer Tier 1, 2, 3	+1,632
HG _ _	High Gloss Polyester	+1,794

Step 5. Base Finish

T1 _ _	Veneer Tier 1	+1,257
T2 _ _	Veneer Tier 2	+3,009
SL _ _	Satin Lacquer	+0
HG _ _	High Gloss Polyester	+5,802

Step 6. Power & Connectivity Access: Optional

DRHW	Drawer, Hardwired (layered edge only), Qty 10	+17,070
DRPI	Drawer, Plug In (layered edge only), Qty 10	+14,610
TMHW	Tabletop Metal lid, Hardwired, Qty 3	+14,271
TMPI	Tabletop Metal lid, Plug In, Qty 3	+12,603
TWHW	Tabletop Wood lid, Hardwired (veneer tops only), Qty 3	+8,452
TWPI	Tabletop Wood lid, Plug In (veneer tops only), Qty 3	+7,300
UMHW	Undermount, Hardwired, Qty 10	+10,190
UMPI	Undermount, Plug In, Qty 10	+7,410

Step 7. Microphone and/or Grommet Accommodations: Optional

MA _ _	Microphone hole (factory cut)	Qty _ _ x 321 each
GM _ _	2” Grommet Hole (factory cut), liner, lid, in matching metal finish	Qty _ _ x 423 each

Please consult **page 7** for the palette of DatesWeiser finishes. Natural stone, non-standard glass and veneer, and other technology options are available. Please email **customerservice@datesweiser.com** for a custom quote. Consult technical information on **page 294** for construction details and technical information.

*Tables with a Caesarstone finish require a 5-section top.

Highline Fifty Square and Round Meeting Tables Index

48″–72″ width

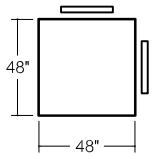

03M48S
4 Person Table

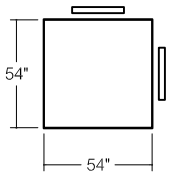

03M54S
4 Person Table

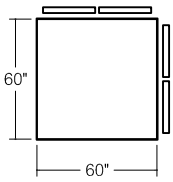

03M60S
8 Person Table

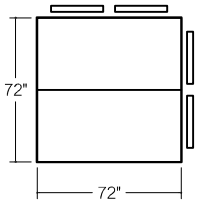

03M72S
8 Person Table

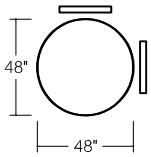

03M48C
4 Person Table

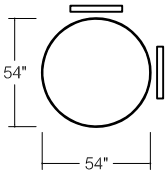

03M54C
4 Person Table

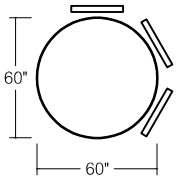

03M60C
6 Person Table

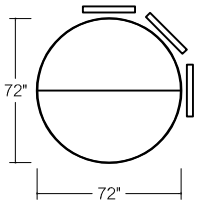

03M72C
8 Person Table

Highline Fifty Square Meeting Table

48”x48”/ 4 Person
03M48S

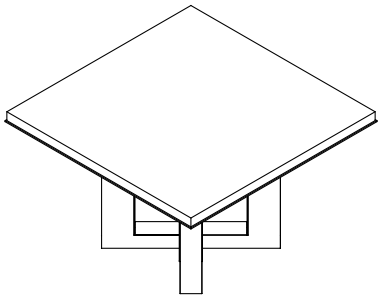

Starting Price: $12,707

48x48 table, slab veneer Tier 1 top, open painted base with no metal trim, powder coat finish

Pattern Number: 03M48S

Step 1. Top Material

S	Slab (veneer only)
V	Veneer layered
G	Glass layered
C	Corian layered
Q	Caesarstone layered

Step 2. Base Options

ON	Open Base, no metal trim	+ 0
MC _ _	Open Base, MC metal trim	+4,285
PM01	Open Base, PM01 metal trim	+4,611
PM02	Open Base, PM02 metal trim	+4,611
PM03	Open Base, PM03 metal trim	+5,738

Step 3. Metal Edge Finish

MC _ _	Powder Coat	+0
PM01	Polished Chrome	+345
PM02	Satin Nickel	+345
PM03	Oil Rubbed Bronze	+419

Step 4A. Top Finish

T1 _ _	Veneer Tier 1	+0
T2 _ _	Veneer Tier 2	+368
GC _ _	Clear Glass, back painted	+1,584
GE _ _	Etched matte Glass, back painted	+1,904
CS01	Corian Glacier White	+2,320
QS _ _	Caesarstone	+6,000

Step 4B. Lower Layer Finish (Layer top only)

SL _ _	Satin Lacquer	+210
T _ _ _	Veneer Tier 1, 2, 3	+318
HG _ _	High Gloss Polyester	+318

Step 5. Base Finish

T1 _ _	Veneer Tier 1	+1,361
T2 _ _	Veneer Tier 2	+2,342
SL _ _	Satin Lacquer	+0
HG _ _	High Gloss Polyester	+4,677

Step 6. Power & Connectivity Access: Optional

DRHW	Drawer, Hardwired (layered edge only), Qty 4	+6,828
DRPI	Drawer, Plug In (layered edge only), Qty 4	+5,844
HMHW	Tabletop Metal lid, Hardwired, Qty 1	+3,147
HMPI	Tabletop Metal lid, Plug In, Qty 1	+2,452
HWHW	Tabletop Wood lid, Hardwired, Qty 1	+3,964
HWPI	Tabletop Wood lid, Plug In, Qty 1	+3,090
UMHW	Undermount, Hardwired, Qty 4	+4,076
UMPI	Undermount, Plug In, Qty 4	+2,964

Step 7. Microphone and/or Grommet Accommodations: Optional

MA _ _	Microphone hole (factory cut)	Qty _ _ x 321 each
GM _ _	2” Grommet hole (factory cut), liner, lid, in matching metal finish	Qty _ _ x 423 each

Please consult **page 7** for the palette of DatesWeiser finishes. Natural stone, non-standard glass and veneer, and other technology options are available. Please email **customerservice@datesweiser.com** for a custom quote. Consult technical information on **page 304** for construction details and technical information.

Highline Fifty Square Meeting Table

54”x54”/ 4 Person
03M54S

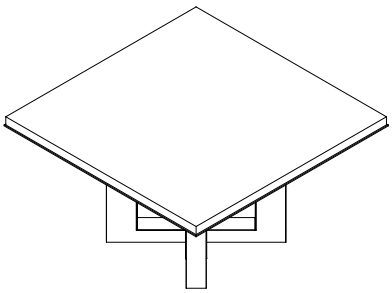

Starting Price: $13,696

54x54 table, slab veneer Tier 1 top, open painted base with no metal trim, powder coat finish

Pattern Number: 03M54S

Step 1. Top Material

S	Slab (veneer only)
V	Veneer layered
G	Glass layered
C	Corian layered
Q	Caesarstone layered

Step 2. Base Options

ON	Open Base, no metal trim	+ 0
MC _ _	Open Base, MC metal trim	+4,285
PM01	Open Base, PM01 metal trim	+4,611
PM02	Open Base, PM02 metal trim	+4,611
PM03	Open Base, PM03 metal trim	+5,738

Step 3. Metal Edge Finish

MC _ _	Powder Coat	+0
PM01	Polished Chrome	+345
PM02	Satin Nickel	+345
PM03	Oil Rubbed Bronze	+419

Step 4A. Top Finish

T1 _ _	Veneer Tier 1	+0
T2 _ _	Veneer Tier 2	+466
GC _ _	Clear Glass, back painted	+2,005
GE _ _	Etched matte Glass, back painted	+2,410
CS01	Corian Glacier White	+2,936
QS _ _	Caesarstone	+7,594

Step 4B. Lower Layer Finish (Layer top only)

SL _ _	Satin Lacquer	+226
T _ _ _	Veneer Tier 1, 2, 3	+369
HG _ _	High Gloss Polyester	+369

Step 5. Base Finish

T1 _ _	Veneer Tier 1	+1,361
T2 _ _	Veneer Tier 2	+2,342
SL _ _	Satin Lacquer	+0
HG _ _	High Gloss Polyester	+4,677

Step 6. Power & Connectivity Access: Optional

DRHW	Drawer, Hardwired (layered edge only), Qty 4	+6,828
DRPI	Drawer, Plug In (layered edge only), Qty 4	+5,844
HMHW	Tabletop Metal lid, Hardwired, Qty 1	+3,147
HMPI	Tabletop Metal lid, Plug In, Qty 1	+2,452
HWHW	Tabletop Wood lid, Hardwired, Qty 1	+3,964
HWPI	Tabletop Wood lid, Plug In, Qty 1	+3,090
UMHW	Undermount, Hardwired, Qty 4	+4,076
UMPI	Undermount, Plug In, Qty 4	+2,964

Step 7. Microphone and/or Grommet Accommodations: Optional

MA _ _	Microphone hole (factory cut)	Qty _ _ x 321 each
GM _ _	2” Grommet hole (factory cut), liner, lid, in matching metal finish	Qty _ _ x 423 each

Please consult **page 7** for the palette of DatesWeiser finishes. Natural stone, non-standard glass and veneer, and other technology options are available. Please email **customerservice@datesweiser.com** for a custom quote. Consult technical information on **page 304** for construction details and technical information.

Highline Fifty Square Meeting Table

60”x60”/ 8 Person
03M60S

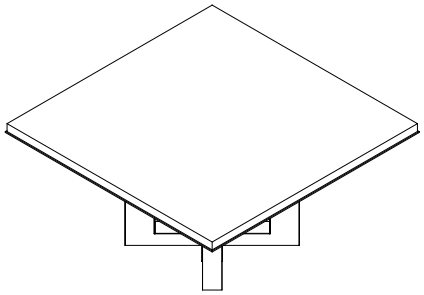

Starting Price: $14,586

60x60 table, slab veneer Tier 1 top, open painted base with no metal trim, powder coat finish

Pattern Number: 03M60S

Step 1. Top Material

S	Slab (veneer only)
V	Veneer layered
G	Glass layered
C	Corian layered
Q	Caesarstone layered

Step 2. Base Options

ON	Open Base, no metal trim	+ 0
MC _ _	Open Base, MC metal trim	+4,285
PM01	Open Base, PM01 metal trim	+4,611
PM02	Open Base, PM02 metal trim	+4,611
PM03	Open Base, PM03 metal trim	+5,738

Step 3. Metal Edge Finish

MC _ _	Powder Coat	+0
PM01	Polished Chrome	+345
PM02	Satin Nickel	+345
PM03	Oil Rubbed Bronze	+419

Step 4A. Top Finish

T1 _ _	Veneer Tier 1	+0
T2 _ _	Veneer Tier 2	+575
GC _ _	Clear Glass, back painted	+2,475
GE _ _	Etched matte Glass, back painted	+2,975
CS01	Corian Glacier White	+3,625
QS _ _	Caesarstone*	+9,375

Step 4B. Lower Layer Finish (Layer top only)

SL _ _	Satin Lacquer	+303
T _ _ _	Veneer Tier 1, 2, 3	+441
HG _ _	High Gloss Polyester	+441

Step 5. Base Finish

T1 _ _	Veneer Tier 1	+1,505
T2 _ _	Veneer Tier 2	+2,601
SL _ _	Satin Lacquer	+0
HG _ _	High Gloss Polyester	+5,178

Step 6. Power & Connectivity Access: Optional

DRHW	Drawer, Hardwired (layered edge only), Qty 4	+6,828
DRPI	Drawer, Plug In (layered edge only), Qty 4	+5,844
HMHW	Tabletop Metal lid, Hardwired, Qty 1	+3,147
HMPI	Tabletop Metal lid, Plug In, Qty 1	+2,452
HWHW	Tabletop Wood lid, Hardwired, Qty 1	+3,964
HWPI	Tabletop Wood lid, Plug In, Qty 1	+3,090
UMHW	Undermount, Hardwired, Qty 4	+4,076
UMPI	Undermount, Plug In, Qty 4	+2,964

Step 7. Microphone and/or Grommet Accommodations: Optional

MA _ _	Microphone hole (factory cut)	Qty _ _ x 321 each
GM _ _	2” Grommet hole (factory cut), liner, lid, in matching metal finish	Qty _ _ x 423 each

Please consult **page 7** for the palette of DatesWeiser finishes. Natural stone, non-standard glass and veneer, and other technology options are available. Please email **customerservice@datesweiser.com** for a custom quote. Consult technical information on **page 304** for construction details and technical information.

*Tables with a Caesarstone finish require a 2-section top.

Highline Fifty Square Meeting Table

72”x72”/ 8 Person
03M72S

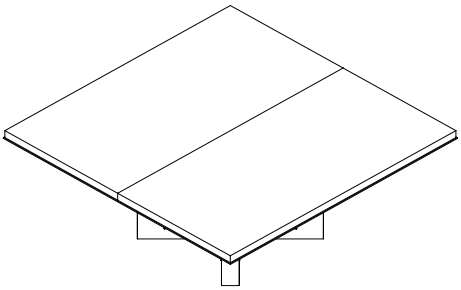

Starting Price: $17,466

72x72 table, slab veneer Tier 1 top, open painted base with no metal trim, powder coat finish

Pattern Number: 03M72S

Step 1. Top Material

S	Slab (veneer only)
V	Veneer layered
G	Glass layered
C	Corian layered
Q	Caesarstone layered

Step 2. Base Options

ON	Open Base, no metal trim	+ 0
MC _ _	Open Base, MC metal trim	+4,285
PM01	Open Base, PM01 metal trim	+4,611
PM02	Open Base, PM02 metal trim	+4,611
PM03	Open Base, PM03 metal trim	+5,738

Step 3. Metal Edge Finish

MC _ _	Powder Coat	+0
PM01	Polished Chrome	+345
PM02	Satin Nickel	+345
PM03	Oil Rubbed Bronze	+419

Step 4A. Top Finish

T1 _ _	Veneer Tier 1	+0
T2 _ _	Veneer Tier 2	+828
GC _ _	Clear Glass, back painted	+3,564
GE _ _	Etched matte Glass, back painted	+4,284
CS01	Corian Glacier White	+5,220
QS _ _	Caesarstone	+13,500

Step 4B. Lower Layer Finish (Layer top only)

SL _ _	Satin Lacquer	+391
T _ _ _	Veneer Tier 1, 2, 3	+556
HG _ _	High Gloss Polyester	+556

Step 5. Base Finish

T1 _ _	Veneer Tier 1	+1,505
T2 _ _	Veneer Tier 2	+2,601
SL _ _	Satin Lacquer	+0
HG _ _	High Gloss Polyester	+5,178

Step 6. Power & Connectivity Access: Optional

DRHW	Drawer, Hardwired (layered edge only), Qty 4	+6,828
DRPI	Drawer, Plug In (layered edge only), Qty 4	+5,844
HMHW	Tabletop Metal lid, Hardwired, Qty 1	+3,147
HMPI	Tabletop Metal lid, Plug In, Qty 1	+2,452
HWHW	Tabletop Wood lid, Hardwired, Qty 1	+3,964
HWPI	Tabletop Wood lid, Plug In, Qty 1	+3,090
UMHW	Undermount, Hardwired, Qty 4	+4,076
UMPI	Undermount, Plug In, Qty 4	+2,964

Step 7. Microphone and/or Grommet Accommodations: Optional

MA _ _	Microphone hole (factory cut)	Qty _ _ x 321 each
GM _ _	2” Grommet hole (factory cut), liner, lid, in matching metal finish	Qty _ _ x 423 each

Please consult **page 7** for the palette of DatesWeiser finishes. Natural stone, non-standard glass and veneer, and other technology options are available. Please email **customerservice@datesweiser.com** for a custom quote. Consult technical information on **page 304** for construction details and technical information.

Highline Fifty Round Meeting Table

48”/ 4 Person
03M48C

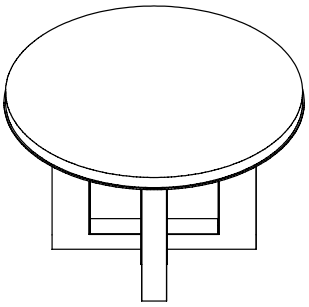

Starting Price: $14,984

48” table, slab veneer Tier 1 top, open painted base with no metal trim, powder coat finish

Pattern Number: 03M48C

Step 1. Top Material		
S	Slab (veneer only)	
V	Veneer layered	
G	Glass layered	
C	Corian layered	
Q	Caesarstone layered	

Step 2. Base Options		
ON	Open Base, no metal trim	+ 0
MC _ _	Open Base, MC metal trim	+4,285
PM01	Open Base, PM01 metal trim	+4,611
PM02	Open Base, PM02 metal trim	+4,611
PM03	Open Base, PM03 metal trim	+5,738

Step 3. Metal Edge Finish		
MC _ _	Powder Coat	+0
PM01	Polished Chrome	+306
PM02	Satin Nickel	+306
PM03	Oil Rubbed Bronze	+1,874

Step 4A. Top Finish		
T1 _ _	Veneer Tier 1	+0
T2 _ _	Veneer Tier 2	+368
GC _ _	Clear Glass, back painted	+2,400
GE _ _	Etched matte Glass, back painted	+2,880
CS01	Corian Glacier White	+3,840
QS _ _	Caesarstone	+7,600

Step 4B. Lower Layer Finish (Layer top only)		
SL _ _	Satin Lacquer	+204
T _ _ _	Veneer Tier 1, 2, 3	+314
HG _ _	High Gloss Polyester	+314

Step 5. Base Finish		
T1 _ _	Veneer Tier 1	+1,361
T2 _ _	Veneer Tier 2	+2,342
SL _ _	Satin Lacquer	+0
HG _ _	High Gloss Polyester	+4,677

Step 6. Power & Connectivity Access: Optional		
DRHW	Drawer, Hardwired (layered edge only), Qty 4	+6,828
DRPI	Drawer, Plug In (layered edge only), Qty 4	+5,844
HMHW	Tabletop, Metal lid, Hardwired, Qty 1	+3,147
HMPI	Tabletop, Metal lid, Plug In, Qty 1	+2,452
HWHW	Tabletop, Wood lid, Hardwired, Qty 1	+3,964
HWPI	Tabletop, Wood lid, Plug In, Qty 1	+3,090
UMHW	Undermount, Hardwired, Qty 4	+4,076
UMPI	Undermount, Plug In, Qty 4	+2,964

Step 5. Microphone and/or Grommet Accommodations: Optional		
MA _ _	Microphone hole (factory cut)	Qty _ _ x 321 each
GM _ _	2” Grommet hole (factory cut), liner, lid, in matching metal finish	Qty _ _ x 423 each

Please consult **page 7** for the palette of DatesWeiser finishes. Natural stone, non-standard glass and veneer, and other technology options are available. Please email **customerservice@datesweiser.com** for a custom quote. Consult technical information on **page 304** for construction details and technical information.

Highline Fifty Round Meeting Table

54”/ 4 Person
03M54C

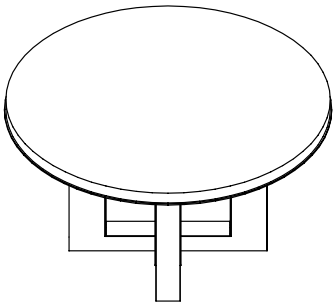

Starting Price: $16,610

54” table, slab veneer Tier 1 top, open painted base with no metal trim, powder coat finish

Pattern Number: 03M54C

Step 1. Top Material

S	Slab (veneer only)
V	Veneer layered
G	Glass layered
C	Corian layered
Q	Caesarstone layered

Step 2. Base Options

ON	Open Base, no metal trim	+ 0
MC _ _	Open Base, MC metal trim	+4,285
PM01	Open Base, PM01 metal trim	+4,611
PM02	Open Base, PM02 metal trim	+4,611
PM03	Open Base, PM03 metal trim	+5,738

Step 3. Metal Edge Finish

MC _ _	Powder Coat	+0
PM01	Polished Chrome	+306
PM02	Satin Nickel	+306
PM03	Oil Rubbed Bronze	+1,874

Step 4A. Top Finish

T1 _ _	Veneer Tier 1	+0
T2 _ _	Veneer Tier 2	+466
GC _ _	Clear Glass, back painted	+3,037
GE _ _	Etched matte Glass, back painted	+3,645
CS01	Corian Glacier White	+4,860
QS _ _	Caesarstone	+9,619

Step 4B. Lower Layer Finish (Layer top only)

SL _ _	Satin Lacquer	+253
T _ _ _	Veneer Tier 1, 2, 3	+397
HG _ _	High Gloss Polyester	+397

Step 5. Base Finish

T1 _ _	Veneer Tier 1	+1,361
T2 _ _	Veneer Tier 2	+2,342
SL _ _	Satin Lacquer	+0
HG _ _	High Gloss Polyester	+4,677

Step 6. Power & Connectivity Access: Optional

DRHW	Drawer, Hardwired (layered edge only), Qty 4	+6,828
DRPI	Drawer, Plug In (layered edge only), Qty 4	+5,844
HMHW	Tabletop, Metal lid, Hardwired, Qty 1	+3,147
HMPI	Tabletop, Metal lid, Plug In, Qty 1	+2,452
HWHW	Tabletop, Wood lid, Hardwired, Qty 1	+3,964
HWPI	Tabletop, Wood lid, Plug In, Qty 1	+3,090
UMHW	Undermount, Hardwired, Qty 4	+4,076
UMPI	Undermount, Plug In, Qty 4	+2,964

Step 5. Microphone and/or Grommet Accommodations: Optional

MA _ _	Microphone hole (factory cut)	Qty _ _ x 321 each
GM _ _	2” Grommet hole (factory cut), liner, lid, in matching metal finish	Qty _ _ x 423 each

Please consult **page 7** for the palette of DatesWeiser finishes. Natural stone, non-standard glass and veneer, and other technology options are available. Please email **customerservice@datesweiser.com** for a custom quote. Consult technical information on **page 304** for construction details and technical information.

Highline Fifty Round Meeting Table

60”/ 6 Person
03M60C

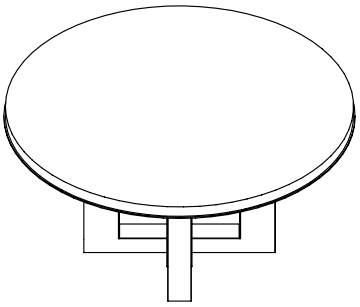

Starting Price: $17,443

60” table, slab veneer Tier 1 top, open painted base with no metal trim, powder coat finish

Pattern Number: 03M60C

Step 1. Top Material		
S	Slab (veneer only)	
V	Veneer layered	
G	Glass layered	
C	Corian layered	
Q	Caesarstone layered	

Step 2. Base Options		
ON	Open Base, no metal trim	+ 0
MC _ _	Open Base, MC metal trim	+4,285
PM01	Open Base, PM01 metal trim	+4,611
PM02	Open Base, PM02 metal trim	+4,611
PM03	Open Base, PM03 metal trim	+5,738

Step 3. Metal Edge Finish		
MC _ _	Powder Coat	+0
PM01	Polished Chrome	+428
PM02	Satin Nickel	+428
PM03	Oil Rubbed Bronze	+1,874

Step 4A. Top Finish		
T1 _ _	Veneer Tier 1	+0
T2 _ _	Veneer Tier 2	+575
GC _ _	Clear Glass, back painted	+3,750
GE _ _	Etched matte Glass, back painted	+4,500
CS01	Corian Glacier White	+6,000
QS _ _	Caesarstone*	+11,875

Step 4B. Lower Layer Finish (Layer top only)		
SL _ _	Satin Lacquer	+293
T _ _ _	Veneer Tier 1, 2, 3	+452
HG _ _	High Gloss Polyester	+452

Step 5. Base Finish		
T1 _ _	Veneer Tier 1	+1,505
T2 _ _	Veneer Tier 2	+2,601
SL _ _	Satin Lacquer	+0
HG _ _	High Gloss Polyester	+5,178

Step 6. Power & Connectivity Access: Optional		
DRHW	Drawer, Hardwired (layered edge only), Qty 4	+6,828
DRPI	Drawer, Plug In (layered edge only), Qty 4	+5,844
HMHW	Tabletop, Metal lid, Hardwired, Qty 1	+3,147
HMPI	Tabletop, Metal lid, Plug In, Qty 1	+2,452
HWHW	Tabletop, Wood lid, Hardwired, Qty 1	+3,964
HWPI	Tabletop, Wood lid, Plug In, Qty 1	+3,090
UMHW	Undermount, Hardwired, Qty 4	+5,095
UMPI	Undermount, Plug In, Qty 4	+3,705

Step 5. Microphone and/or Grommet Accommodations: Optional		
MA _ _	Microphone hole (factory cut)	Qty _ _ x 321 each
GM _ _	2” Grommet hole (factory cut), liner, lid, in matching metal finish	Qty _ _ x 423 each

Please consult **page 7** for the palette of DatesWeiser finishes. Natural stone, non-standard glass and veneer, and other technology options are available. Please email **customerservice@datesweiser.com** for a custom quote. Consult technical information on **page 304** for construction details and technical information.

*Tables with a Caesarstone finish require a 2-section top.

Highline Fifty Round Meeting Table

72”/ 8 Person
03M72C

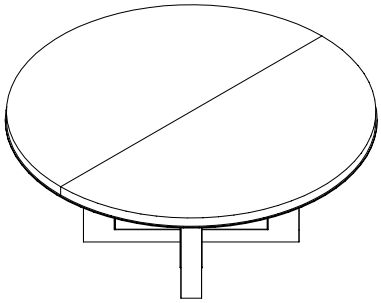

Starting Price: $20,436

72” table, slab veneer Tier 1 top, open painted base with no metal trim, powder coat finish

Pattern Number: 03M72C

Step 1. Top Material

S	Slab (veneer only)
V	Veneer layered
G	Glass layered
C	Corian layered
Q	Caesarstone layered

Step 2. Base Options

ON	Open Base, no metal trim	+ 0
MC _ _	Open Base, MC metal trim	+4,285
PM01	Open Base, PM01 metal trim	+4,611
PM02	Open Base, PM02 metal trim	+4,611
PM03	Open Base, PM03 metal trim	+5,738

Step 3. Metal Edge Finish

MC _ _	Powder Coat	+0
PM01	Polished Chrome	+428
PM02	Satin Nickel	+428
PM03	Oil Rubbed Bronze	+1,874

Step 4A. Top Finish

T1 _ _	Veneer Tier 1	+0
T2 _ _	Veneer Tier 2	+828
GC _ _	Clear Glass, back painted	+5,400
GE _ _	Etched matte Glass, back painted	+6,480
CS01	Corian Glacier White	+8,640
QS _ _	Caesarstone	+17,100

Step 4B. Lower Layer Finish (Layer top only)

SL _ _	Satin Lacquer	+358
T _ _ _	Veneer Tier 1, 2, 3	+540
HG _ _	High Gloss Polyester	+540

Step 5. Base Finish

T1 _ _	Veneer Tier 1	+1,505
T2 _ _	Veneer Tier 2	+2,601
SL _ _	Satin Lacquer	+0
HG _ _	High Gloss Polyester	+5,178

Step 6. Power & Connectivity Access: Optional

DRHW	Drawer, Hardwired (layered edge only), Qty 4	+6,828
DRPI	Drawer, Plug In (layered edge only), Qty 4	+5,844
HMHW	Tabletop, Metal lid, Hardwired, Qty 1	+3,147
HMPI	Tabletop, Metal lid, Plug In, Qty 1	+2,452
HWHW	Tabletop, Wood lid, Hardwired, Qty 1	+3,964
HWPI	Tabletop, Wood lid, Plug In, Qty 2	+3,090
UMHW	Undermount, Hardwired, Qty 4	+6,114
UMPI	Undermount, Plug In, Qty 4	+4,446

Step 5. Microphone and/or Grommet Accommodations: Optional

MA _ _	Microphone hole (factory cut)	Qty _ _ x 321 each
GM _ _	2” Grommet hole (factory cut), liner, lid, in matching metal finish	Qty _ _ x 423 each

Please consult **page 7** for the palette of DatesWeiser finishes. Natural stone, non-standard glass and veneer, and other technology options are available. Please email **customerservice@datesweiser.com** for a custom quote. Consult technical information on **page 304** for construction details and technical information.

Highline Fifty Credenzas Index

66″–114″ width

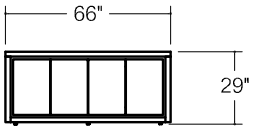

03C66C

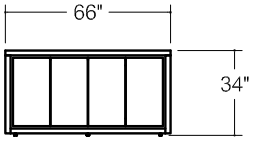

03C66B

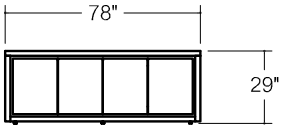

03C78C

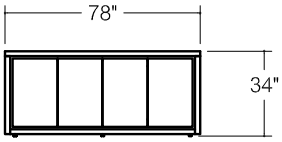

03C78B

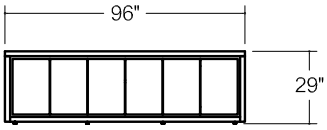

03C96C

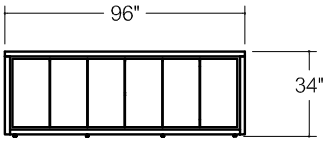

03C96B

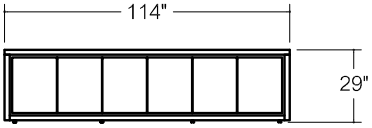

03C114C

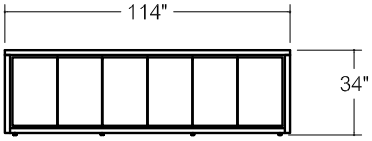

03C114B

Highline Fifty Credenza

66” Long, 34” Buffet Height
03C66B

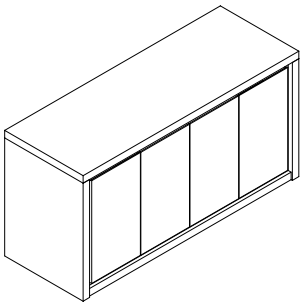

Starting Price: $11,853

66” credenza, 34” high, no top, all doors, satin lacquer case and doors, matching interior finish reveal

Pattern Number: 03C66B

Step 1. Top

NT	No top
FT	Full Top

Step 2. Top Finish (not applicable in ‘no top’ configuration)

GC00	Clear Glass	+2,068
GC _ _	Clear Glass, back painted	+2,419
GE _ _	Etched matte Glass, back painted	+2,617
CS01	Corian Glacier White	+2,727
QS _ _	Caesarstone	+3,819

Step 3. Shell Finish

SL _ _	Satin Lacquer	+0
T1	Veneer Tier 1	+1,796
T2	Veneer Tier 2	+3,108
HG _ _	High Gloss Polyester	+6,012

Step 4. Reveal Finish

MI _ _	Match Interior	+0
MC _ _	Powder Coat	+580
PM01	Polished Chrome	+580
PM02	Satin Nickel	+580
PM03	Oil Rubbed Bronze	+580

Step 5. Interior Finish

SL _ _	Satin Lacquer	+0
T1 _ _	Veneer Tier 1	+1,091
T2 _ _	Veneer Tier 2	+1,311
HG _ _	High Gloss Polyester	+4,460

Step 6. Door/Drawer Face Finish

SL _ _	Satin Lacquer	+0
T1 _ _	Veneer Tier 1	+535
T2 _ _	Veneer Tier 2	+1,041
HG _ _	High Gloss Polyester	+2,260

Step 7. Configuration

Specify Left to Right: Select single or double space components for 4 available positions. When any double space component is selected, insert code in desired starting position and XXXX in subsequent position.

03 _ _ _ _ B	Position 1
03 _ _ _ _ B	Position 2
03 _ _ _ _ B	Position 3
03 _ _ _ _ B	Position 4

DOUBLE SPACE COMPONENTS

03DR30B	Doors w/adjustable shelf	0
03FF30B	Lateral File over Lateral File	342
03OF30B	Open over Lateral File	319
03DD30B	Drawer over Doors	419
03TP30B	Trash Pullout	1,080
03AV30B	2 Door AV	386

SINGLE SPACE COMPONENTS

03DR15B	Door w/adjustable shelf	0
03FF15B	File over File	171
03OF15B	Open over File	160
03DD15B	Drawer over Door	209
03TP15B	Trash Pullout	540

Please consult **page 7** for the palette of DatesWeiser finishes. Natural stone, non-standard glass and veneer, and other technology options are available. Please email **customerservice@datesweiser.com** for a custom quote. Consult technical information on **page 313** for construction details and technical information.

Highline Fifty Credenza

78” Long, 34” Buffet Height
03C78B

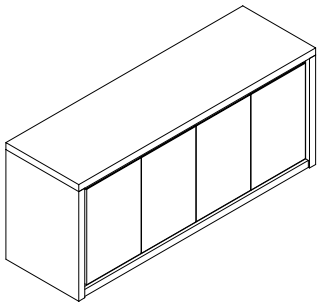

Starting Price: $12,803

78” credenza, 34” high, no top, all doors, satin lacquer case and doors, matching interior finish reveal

Pattern Number: 03C78B

Step 1. Top

NT	No top
FT	Full Top

Step 2. Top Finish (not applicable in ‘no top’ configuration)

GC00	Clear Glass	+2,073
GC _ _	Clear Glass, back painted	+2,425
GE _ _	Etched matte Glass, back painted	+2,623
CS01	Corian Glacier White	+2,734
QS _ _	Caesarstone	+3,826

Step 3. Shell Finish

SL _ _	Satin Lacquer	+0
T1	Veneer Tier 1	+1,901
T2	Veneer Tier 2	+3,339
HG _ _	High Gloss Polyester	+6,585

Step 4. Reveal Finish

MI _ _	Match Interior	+0
MC _ _	Powder Coat	+580
PM01	Polished Chrome	+580
PM02	Satin Nickel	+580
PM03	Oil Rubbed Bronze	+580

Step 5. Interior Finish

SL _ _	Satin Lacquer	+0
T1 _ _	Veneer Tier 1	+1,224
T2 _ _	Veneer Tier 2	+2,408
HG _ _	High Gloss Polyester	+5,106

Step 6. Door/Drawer Face Finish

SL _ _	Satin Lacquer	+0
T1 _ _	Veneer Tier 1	+535
T2 _ _	Veneer Tier 2	+1,041
HG _ _	High Gloss Polyester	+2,260

Step 7. Configuration

Specify Left to Right: Select single or double space components for 4 available positions. When any double space component is selected, insert code in desired starting position and XXXX in subsequent position.

03 _ _ _ _ B	Position 1
03 _ _ _ _ B	Position 2
03 _ _ _ _ B	Position 3
03 _ _ _ _ B	Position 4

DOUBLE SPACE COMPONENTS

03DR36B	Doors w/adjustable shelf	0
03FF36B	Lateral File over Lateral File	352
03OF36B	Open over Lateral File	331
03DD36B	Drawer over Doors	430
03TP36B	Trash Pullout	1,091
03AV36B	2 Door AV	462

SINGLE SPACE COMPONENTS

03DR18B	Door w/adjustable shelf	0
03FF18B	File over File	176
03OF85B	Open over File	166
03DD18B	Drawer over Door	215
03TP18B	Trash Pullout	546

Please consult **page 7** for the palette of DatesWeiser finishes. Natural stone, non-standard glass and veneer, and other technology options are available. Please email **customerservice@datesweiser.com** for a custom quote. Consult technical information on **page 313** for construction details and technical information.

Highline Fifty Credenza

96” Long, 34” Buffet Height
03C96B

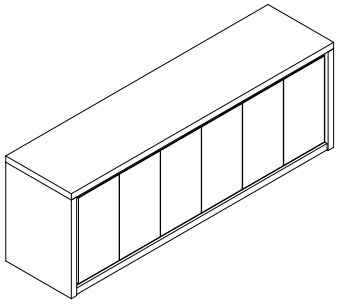

Starting Price: $15,359

96” credenza, 34” high, no top, all doors, satin lacquer case and doors, matching interior finish reveal

Pattern Number: 03C96B

Step 1. Top

NT	No top
FT	Full Top

Step 2. Top Finish (not applicable in ‘no top’ configuration)

GC00	Clear Glass	+2,575
GC _ _	Clear Glass, back painted	+2,992
GE _ _	Etched matte Glass, back painted	+3,246
CS01	Corian Glacier White	+3,438
QS _ _	Caesarstone	+4,814

Step 3. Shell Finish

SL _ _	Satin Lacquer	+0
T1	Veneer Tier 1	+2,094
T2	Veneer Tier 2	+3,726
HG _ _	High Gloss Polyester	+7,466

Step 4. Reveal Finish

MI _ _	Match Interior	+0
MC _ _	Powder Coat	+580
PM01	Polished Chrome	+580
PM02	Satin Nickel	+580
PM03	Oil Rubbed Bronze	+580

Step 5. Interior Finish

SL _ _	Satin Lacquer	+0
T1 _ _	Veneer Tier 1	+1,565
T2 _ _	Veneer Tier 2	+3,053
HG _ _	High Gloss Polyester	+6,457

Step 6. Door/Drawer Face Finish

SL _ _	Satin Lacquer	+0
T1 _ _	Veneer Tier 1	+771
T2 _ _	Veneer Tier 2	+1,505
HG _ _	High Gloss Polyester	+3,675

Step 7. Configuration

Specify Left to Right: Select single or double space components for 6 available positions. When any double space component is selected, insert code in desired starting position and XXXX in subsequent position.

03 _ _ _ _ B	Position 1
03 _ _ _ _ B	Position 2
03 _ _ _ _ B	Position 3
03 _ _ _ _ B	Position 4
03 _ _ _ _ B	Position 5
03 _ _ _ _ B	Position 6

DOUBLE SPACE COMPONENTS

03DR30B	Doors w/adjustable shelf	0
03FF30B	Lateral File over Lateral File	342
03OF30B	Open over Lateral File	319
03DD30B	Drawer over Doors	419
03TP30B	Trash Pullout	1,080
03AV30B	2 Door AV	386

SINGLE SPACE COMPONENTS

03DR15B	Door w/adjustable shelf	0
03FF15B	File over File	171
03OF15B	Open over File	160
03DD15B	Drawer over Door	209
03TP15B	Trash Pullout	540

Please consult **page 7** for the palette of DatesWeiser finishes. Natural stone, non-standard glass and veneer, and other technology options are available. Please email **customerservice@datesweiser.com** for a custom quote. Consult technical information on **page 313** for construction details and technical information.

Highline Fifty Credenza

114” Long, 34” Buffet Height
03C114B

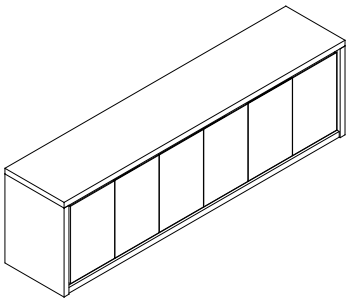

Starting Price: $16,746

114” credenza, 34” high, no top, all doors, satin lacquer case and doors, matching interior finish reveal

Pattern Number: 03C114B

Step 1. Top

NT	No top
FT	Full Top

Step 2. Top Finish (not applicable in ‘no top’ configuration)

GC00	Clear Glass	+3,953
GC_ _	Clear Glass, back painted	+4,535
GE _ _	Etched matte Glass, back painted	+4,861
CS01	Corian Glacier White	+5,048
QS_ _	Caesarstone	+7,067

Step 3. Shell Finish

SL _ _	Satin Lacquer	+0
T1	Veneer Tier 1	+2,248
T2	Veneer Tier 2	+4,061
HG_ _	High Gloss Polyester	+8,354

Step 4. Reveal Finish

MI_ _	Match Interior	+0
MC __	Powder Coat	+667
PM01	Polished Chrome	+667
PM02	Satin Nickel	+667
PM03	Oil Rubbed Bronze	+667

Step 5. Interior Finish

SL _ _	Satin Lacquer	+0
T1 _ _	Veneer Tier 1	+1,670
T2 _ _	Veneer Tier 2	+3,405
HG _ _	High Gloss Polyester	+7,334

Step 6. Door/Drawer Face Finish

SL _ _	Satin Lacquer	+0
T1 _ _	Veneer Tier 1	+821
T2 _ _	Veneer Tier 2	+1,681
HG _ _	High Gloss Polyester	+3,946

Step 7. Configuration

Specify Left to Right: Select single or double space components for 6 available positions. When any double space component is selected, insert code in desired starting position and XXXX in subsequent position.

03 _ _ _ _ B	Position 1
03 _ _ _ _ B	Position 2
03 _ _ _ _ B	Position 3
03 _ _ _ _ B	Position 4
03 _ _ _ _ B	Position 5
03 _ _ _ _ B	Position 6

DOUBLE SPACE COMPONENTS

03DR36B	Doors w/adjustable shelf	0
03FF36B	Lateral File over Lateral File	352
03OF36B	Open over Lateral File	331
03DD36B	Drawer over Doors	430
03TP36B	Trash Pullout	1,091
03AV36B	2 Door AV	462

SINGLE SPACE COMPONENTS

03DR18B	Door w/adjustable shelf	0
03FF18B	File over File	176
03OF85B	Open over File	166
03DD18B	Drawer over Door	215
03TP18B	Trash Pullout	546

Please consult **page 7** for the palette of DatesWeiser finishes. Natural stone, non-standard glass and veneer, and other technology options are available. Please email **customerservice@datesweiser.com** for a custom quote. Consult technical information on **page 313** for construction details and technical information.

Highline Fifty Credenza

66” Long, 29” Conference Height
03C66C

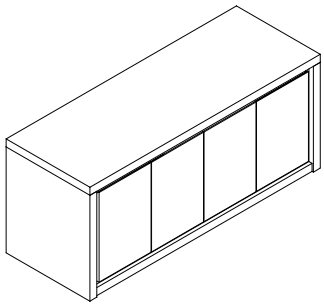

Starting Price: $11,853

66” credenza, 29” high, no top, all doors, satin lacquer case and doors, matching interior finish reveal

Pattern Number: 03C66C

Step 1. Top

NT	No top
FT	Full Top

Step 2. Top Finish (not applicable in ‘no top’ configuration)

GC00	Clear Glass	+2,068
GC _ _	Clear Glass, back painted	+2,419
GE _ _	Etched matte Glass, back painted	+2,617
CS01	Corian Glacier White	+2,727
QS _ _	Caesarstone	+3,819

Step 3. Shell Finish

SL _ _	Satin Lacquer	+0
T1	Veneer Tier 1	+1,796
T2	Veneer Tier 2	+3,108
HG _ _	High Gloss Polyester	+6,012

Step 4. Reveal Finish

MI _ _	Match Interior	+0
MC _ _	Powder Coat	+580
PM01	Polished Chrome	+580
PM02	Satin Nickel	+580
PM03	Oil Rubbed Bronze	+580

Step 5. Interior Finish

SL _ _	Satin Lacquer	+0
T1 _ _	Veneer Tier 1	+1,091
T2 _ _	Veneer Tier 2	+1,311
HG _ _	High Gloss Polyester	+4,460

Step 6. Door/Drawer Face Finish

SL _ _	Satin Lacquer	+0
T1 _ _	Veneer Tier 1	+535
T2 _ _	Veneer Tier 2	+1,041
HG _ _	High Gloss Polyester	+2,260

Step 7. Configuration

Specify Left to Right: Select single or double space components for 4 available positions. When any double space component is selected, insert code in desired starting position and XXXX in subsequent position.

03 _ _ _ _ C	Position 1
03 _ _ _ _ C	Position 2
03 _ _ _ _ C	Position 3
03 _ _ _ _ C	Position 4

DOUBLE SPACE COMPONENTS

03DR30C	Doors w/adjustable shelf	0
03DF30C	Drawer over Lateral File	342
03OF30C	Open over Lateral File	319
03DD30C	Drawer over Doors	419
03TP30C	Trash Pullout	1,080
03AV30C	2 Door AV	386

SINGLE SPACE COMPONENTS

03DR15C	Door w/adjustable shelf	0
03DF15C	Drawer over File	171
03OF15C	Open over File	160
03DD15C	Drawer over Door	209
03TP15C	Trash Pullout	540

Please consult **page 7** for the palette of DatesWeiser finishes. Natural stone, non-standard glass and veneer, and other technology options are available. Please email **customerservice@datesweiser.com** for a custom quote. Consult technical information on **page 313** for construction details and technical information.

Highline Fifty Credenza

78” Long, 29” Conference Height
03C78C

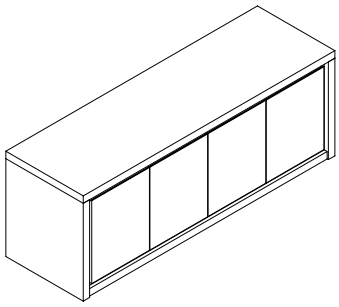

Starting Price: $12,803

78” credenza, 29” high, no top, all doors, satin lacquer case and doors, matching interior finish reveal

Pattern Number: 03C78C

Step 1. Top

NT	No top
FT	Full Top

Step 2. Top Finish (not applicable in ‘no top’ configuration)

GC00	Clear Glass	+2,073
GC _ _	Clear Glass, back painted	+2,425
GE _ _	Etched matte Glass, back painted	+2,623
CS01	Corian Glacier White	+2,734
QS _ _	Caesarstone	+3,826

Step 3. Shell Finish

SL _ _	Satin Lacquer	+0
T1	Veneer Tier 1	+1,901
T2	Veneer Tier 2	+3,339
HG _ _	High Gloss Polyester	+6,585

Step 4. Reveal Finish

MI _ _	Match Interior	+0
MC _ _	Powder Coat	+580
PM01	Polished Chrome	+580
PM02	Satin Nickel	+580
PM03	Oil Rubbed Bronze	+580

Step 5. Interior Finish

SL _ _	Satin Lacquer	+0
T1 _ _	Veneer Tier 1	+1,224
T2 _ _	Veneer Tier 2	+2,408
HG _ _	High Gloss Polyester	+5,106

Step 6. Door/Drawer Face Finish

SL _ _	Satin Lacquer	+0
T1 _ _	Veneer Tier 1	+535
T2 _ _	Veneer Tier 2	+1,041
HG _ _	High Gloss Polyester	+2,260

Step 7. Configuration

Specify Left to Right: Select single or double space components for 4 available positions. When any double space component is selected, insert code in desired starting position and XXXX in subsequent position.

03 _ _ _ _ C	Position 1
03 _ _ _ _ C	Position 2
03 _ _ _ _ C	Position 3
03 _ _ _ _ C	Position 4

DOUBLE SPACE COMPONENTS

03DR36C	Doors w/adjustable shelf	0
03FF36C	Drawer over Lateral File	352
03OF36C	Open over Lateral File	331
03DD36C	Drawer over Doors	430
03TP36C	Trash Pullout	1,091
03AV36C	2 Door AV	462

SINGLE SPACE COMPONENTS

03DR18C	Door w/adjustable shelf	0
03FF18C	Drawer over File	176
03OF85C	Open over File	166
03DD18C	Drawer over Door	215
03TP18C	Trash Pullout	546

Please consult **page 7** for the palette of DatesWeiser finishes. Natural stone, non-standard glass and veneer, and other technology options are available. Please email **customerservice@datesweiser.com** for a custom quote. Consult technical information on **page 313** for construction details and technical information.

Highline Fifty Credenza

96” Long, 29” Conference Height
03C96C

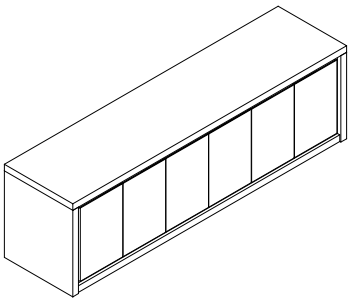

Starting Price: $15,359

96” credenza, 29” high, no top, all doors, satin lacquer case and doors, matching interior finish reveal

Pattern Number: 03C96C

Step 1. Top

NT	No top
FT	Full Top

Step 2. Top Finish (not applicable in ‘no top’ configuration)

GC00	Clear Glass	+2,575
GC _ _	Clear Glass, back painted	+2,992
GE _ _	Etched matte Glass, back painted	+3,246
CS01	Corian Glacier White	+3,438
QS _ _	Caesarstone	+4,814

Step 3. Shell Finish

SL _ _	Satin Lacquer	+0
T1	Veneer Tier 1	+2,094
T2	Veneer Tier 2	+3,726
HG _ _	High Gloss Polyester	+7,466

Step 4. Reveal Finish

MI _ _	Match Interior	+0
MC _ _	Powder Coat	+580
PM01	Polished Chrome	+580
PM02	Satin Nickel	+580
PM03	Oil Rubbed Bronze	+580

Step 5. Interior Finish

SL _ _	Satin Lacquer	+0
T1 _ _	Veneer Tier 1	+1,565
T2 _ _	Veneer Tier 2	+3,053
HG _ _	High Gloss Polyester	+6,457

Step 6. Door/Drawer Face Finish

SL _ _	Satin Lacquer	+0
T1 _ _	Veneer Tier 1	+771
T2 _ _	Veneer Tier 2	+1,505
HG _ _	High Gloss Polyester	+3,675

Step 7. Configuration

Specify Left to Right: Select single or double space components for 6 available positions. When any double space component is selected, insert code in desired starting position and XXXX in subsequent position.

03 _ _ _ _ C	Position 1
03 _ _ _ _ C	Position 2
03 _ _ _ _ C	Position 3
03 _ _ _ _ C	Position 4
03 _ _ _ _ C	Position 5
03 _ _ _ _ C	Position 6

DOUBLE SPACE COMPONENTS

03DR30C	Doors w/adjustable shelf	0
03DF30C	Drawer over Lateral File	342
03OF30C	Open over Lateral File	319
03DD30C	Drawer over Doors	419
03TP30C	Trash Pullout	1,080
03AV30C	2 Door AV	386

SINGLE SPACE COMPONENTS

03DR15C	Door w/adjustable shelf	0
03DF15C	Drawer over File	171
03OF15C	Open over File	160
03DD15C	Drawer over Door	209
03TP15C	Trash Pullout	540

Please consult **page 7** for the palette of DatesWeiser finishes. Natural stone, non-standard glass and veneer, and other technology options are available. Please email **customerservice@datesweiser.com** for a custom quote. Consult technical information on **page 313** for construction details and technical information.

Highline Fifty Credenza

114” Long, 29” Conference Height
03C114C

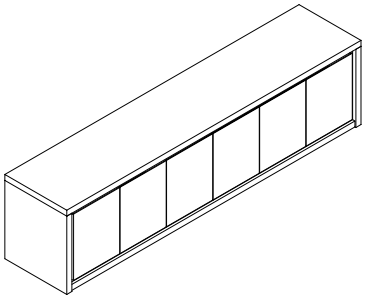

Starting Price: $16,746

114” credenza, 29” high, no top, all doors, satin lacquer case and doors, matching interior finish reveal

Pattern Number: 03C114C

Step 1. Top

NT	No top
FT	Full Top

Step 2. Top Finish (not applicable in ‘no top’ configuration)

GC00	Clear Glass	+3,953
GC _ _	Clear Glass, back painted	+4,535
GE _ _	Etched matte Glass, back painted	+4,861
CS01	Corian Glacier White	+5,048
QS _ _	Caesarstone	+7,067

Step 3. Shell Finish

SL _ _	Satin Lacquer	+0
T1	Veneer Tier 1	+2,248
T2	Veneer Tier 2	+4,061
HG _ _	High Gloss Polyester	+8,354

Step 4. Reveal Finish

MI _ _	Match Interior	+0
MC _ _	Powder Coat	+667
PM01	Polished Chrome	+667
PM02	Satin Nickel	+667
PM03	Oil Rubbed Bronze	+667

Step 5. Interior Finish

SL _ _	Satin Lacquer	+0
T1 _ _	Veneer Tier 1	+1,670
T2 _ _	Veneer Tier 2	+3,405
HG _ _	High Gloss Polyester	+7,334

Step 6. Door/Drawer Face Finish

SL _ _	Satin Lacquer	+0
T1 _ _	Veneer Tier 1	+821
T2 _ _	Veneer Tier 2	+1,681
HG _ _	High Gloss Polyester	+3,946

Step 7. Configuration

Specify Left to Right: Select single or double space components for 6 available positions. When any double space component is selected, insert code in desired starting position and XXXX in subsequent position.

03 _ _ _ _ C	Position 1
03 _ _ _ _ C	Position 2
03 _ _ _ _ C	Position 3
03 _ _ _ _ C	Position 4
03 _ _ _ _ C	Position 5
03 _ _ _ _ C	Position 6

DOUBLE SPACE COMPONENTS

03DR36C	Doors w/adjustable shelf	0
03FF36C	Drawer over Lateral File	352
03OF36C	Open over Lateral File	331
03DD36C	Drawer over Doors	430
03TP36C	Trash Pullout	1,091
03AV36C	2 Door AV	462

SINGLE SPACE COMPONENTS

03DR18C	Door w/adjustable shelf	0
03FF18C	Drawer over File	176
03OF85C	Open over File	166
03DD18C	Drawer over Door	215
03TP18C	Trash Pullout	546

Please consult **page 7** for the palette of DatesWeiser finishes. Natural stone, non-standard glass and veneer, and other technology options are available. Please email **customerservice@datesweiser.com** for a custom quote. Consult technical information on **page 313** for construction details and technical information.

Highline Twenty-Five Collection

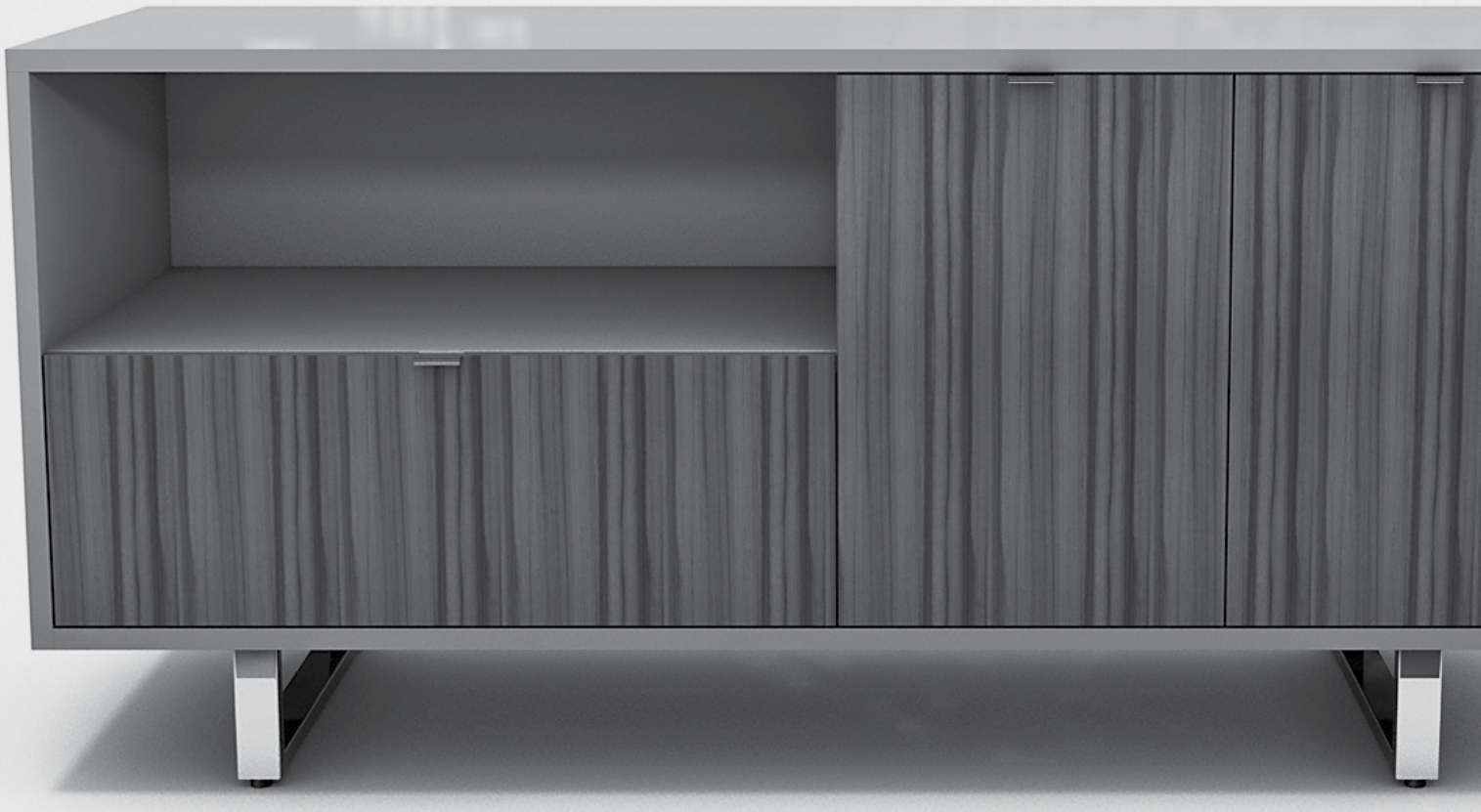

DATESWEISER

Highline Twenty-Five Credenzas Index

60″–108″ width

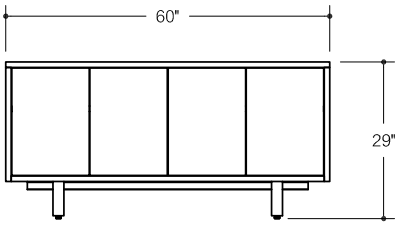

04C60C

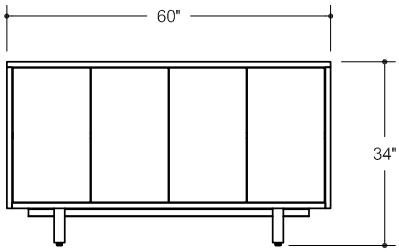

04C60B

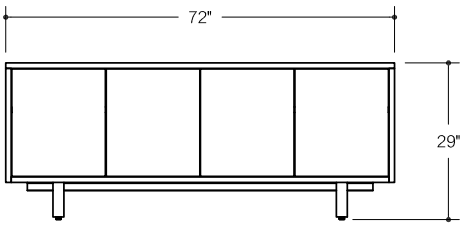

04C72C

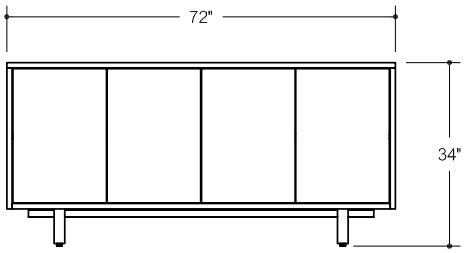

04C72B

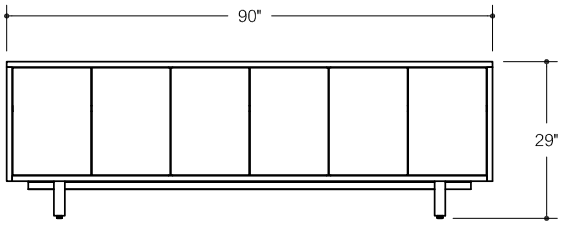

04C90C

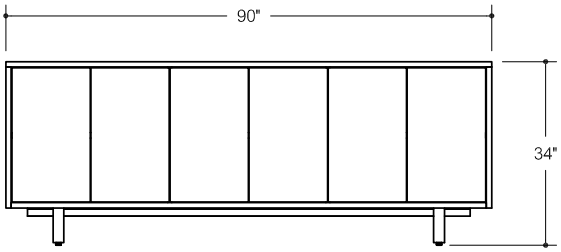

04C90B

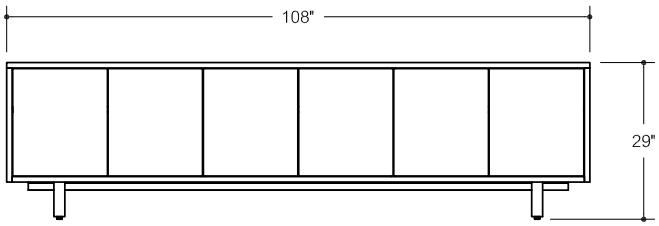

04C108C

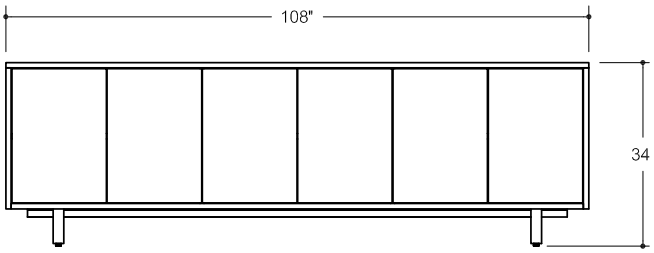

04C108B

Highline Twenty-Five Credenza

60” Long, 34” Buffet Height
04C60B

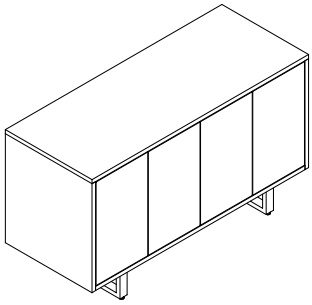

Starting Price: $8,200

60” credenza, 34” high, no top, all doors, satin lacquer case and doors, powder coat legs

Pattern Number: 04C60B

Step 1. Top

NT	No top
FT	Full Top

Step 2. Top Finish (not applicable in ‘no top’ configuration)

GC00	Clear Glass	+1,922
GC _ _	Clear Glass, back painted	+2,242
GE _ _	Etched matte Glass, back painted	+2,413
CS01	Corian Glacier White	+2,520
QS _ _	Caesarstone	+3,528

Step 3. Case Finish

SL _ _	Satin Lacquer	+0
T1	Veneer Tier 1	+1,723
T2	Veneer Tier 2	+3,724
HG _ _	High Gloss Polyester	+8,218

Step 4. Leg Finish

MC _ _	Powder Coat	+0
PM01	Polished Chrome	+342
PM02	Satin Nickel	+342
PM03	Oil Rubbed Bronze	+638

Step 5. Door/Drawer Face Finish

SL _ _	Satin Lacquer	+0
T1 _ _	Veneer Tier 1	+428
T2 _ _	Veneer Tier 2	+931
HG _ _	High Gloss Polyester	+2054

Step 6. Configuration

Specify Left to Right: Select single or double space components for 4 available positions.
When any double space component is selected, insert code in desired starting position and XXXX in subsequent position.

04 _ _ _ _ B	Position 1
04 _ _ _ _ B	Position 2
04 _ _ _ _ B	Position 3
04 _ _ _ _ B	Position 4

DOUBLE SPACE COMPONENTS

04DR30B	Doors w/adjustable shelf	0
04FF30B	Lateral File over Lateral File	+380
04OF30B	Open over Lateral File	+321
04DD30B	Drawer over Doors	+631
04TP30B	Trash Pullout	+1,107
04AV30B	2 Door AV	+375

SINGLE SPACE COMPONENTS

04DR15B	Door w/adjustable shelf	0
04FF15B	File over File	+190
04OF15B	Open over File	+161
04DD15B	Drawer over Door	+316
04TP15B	Trash Pullout	+554

Please consult **page 7** for the palette of DatesWeiser finishes. Natural stone, non-standard glass and veneer, and other technology options are available. Please email **customerservice@datesweiser.com** for a custom quote. Consult technical information on **page 319** for construction details and technical information.

Highline Twenty-Five Credenza

72” Long, 34” Buffet Height
04C72B

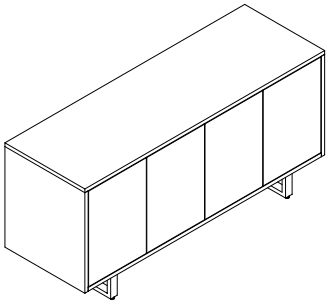

Starting Price: $8,639

72” credenza, 34” high, no top, all doors, satin lacquer case and doors, powder coat legs

Pattern Number: 04C72B

Step 1. Top

NT	No top
FT	Full Top

Step 2. Top Finish (not applicable in ‘no top’ configuration)

GC00	Clear Glass	+2,018
GC _ _	Clear Glass, back painted	+2,456
GE _ _	Etched matte Glass, back painted	+2,659
CS01	Corian Glacier White	+2,793
QS _ _	Caesarstone	+3,910

Step 3. Case Finish

SL _ _	Satin Lacquer	+0
T1	Veneer Tier 1	+1,889
T2	Veneer Tier 2	+4,077
HG _ _	High Gloss Polyester	+9,432

Step 4. Leg Finish

MC _ _	Powder Coat	+0
PM01	Polished Chrome	+342
PM02	Satin Nickel	+342
PM03	Oil Rubbed Bronze	+638

Step 5. Door/Drawer Face Finish

SL _ _	Satin Lacquer	+0
T1 _ _	Veneer Tier 1	+471
T2 _ _	Veneer Tier 2	+1,022
HG _ _	High Gloss Polyester	+2,359

Step 6. Configuration

Specify Left to Right: Select single or double space components for 4 available positions. When any double space component is selected, insert code in desired starting position and XXXX in subsequent position.

04 _ _ _ _ B	Position 1
04 _ _ _ _ B	Position 2
04 _ _ _ _ B	Position 3
04 _ _ _ _ B	Position 4

DOUBLE SPACE COMPONENTS

04DR36B	Doors w/adjustable shelf	0
04FF36B	Lateral File over Lateral File	+423
04OF36B	Open over Lateral File	+375
04DD36B	Drawer over Doors	+679
04TP36B	Trash Pullout	+1,172
04AV36B	2 Door AV	+449

SINGLE SPACE COMPONENTS

04DR18B	Door w/adjustable shelf	0
04FF18B	File over File	+212
04OF85B	Open over File	+187
04DD18B	Drawer over Door	+340
04TP18B	Trash Pullout	+586

Please consult **page 7** for the palette of DatesWeiser finishes. Natural stone, non-standard glass and veneer, and other technology options are available. Please email **customerservice@datesweiser.com** for a custom quote. Consult technical information on **page 319** for construction details and technical information.

Highline Twenty-Five Credenza

90” Long, 34” Buffet Height
04C90B

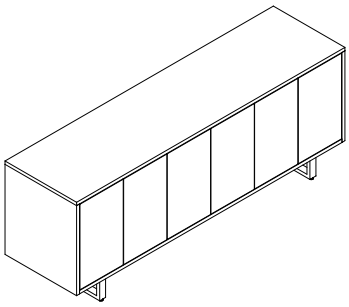

Starting Price: $10,522

90” credenza, 34” high, no top, all doors, satin lacquer case and doors, powder coat legs

Pattern Number: 04C90B

Step 1. Top

NT	No top
FT	Full Top

Step 2. Top Finish (not applicable in ‘no top’ configuration)

GC00	Clear Glass	+2,211
GC _ _	Clear Glass, back painted	+2,787
GE _ _	Etched matte Glass, back painted	+3,033
CS01	Corian Glacier White	+3,199
QS _ _	Caesarstone	+4,479

Step 3. Case Finish

SL _ _	Satin Lacquer	+0
T1	Veneer Tier 1	+2,370
T2	Veneer Tier 2	+5,168
HG _ _	High Gloss Polyester	+11,133

Step 4. Leg Finish

MC _ _	Powder Coat	+0
PM01	Polished Chrome	+342
PM02	Satin Nickel	+342
PM03	Oil Rubbed Bronze	+638

Step 5. Door/Drawer Face Finish

SL _ _	Satin Lacquer	+0
T1 _ _	Veneer Tier 1	+594
T2 _ _	Veneer Tier 2	+1,295
HG _ _	High Gloss Polyester	+2,782

Step 6. Configuration

Specify Left to Right: Select single or double space components for 6 available positions. When any double space component is selected, insert code in desired starting position and XXXX in subsequent position.

04 _ _ _ _ B	Position 1
04 _ _ _ _ B	Position 2
04 _ _ _ _ B	Position 3
04 _ _ _ _ B	Position 4
04 _ _ _ _ B	Position 5
04 _ _ _ _ B	Position 6

DOUBLE SPACE COMPONENTS

04DR30B	Doors w/adjustable shelf	0
04FF30B	Lateral File over Lateral File	+380
04OF30B	Open over Lateral File	+321
04DD30B	Drawer over Doors	+631
04TP30B	Trash Pullout	+1,107
04AV30B	2 Door AV	+375

SINGLE SPACE COMPONENTS

04DR15B	Door w/adjustable shelf	0
04FF15B	File over File	+190
04OF15B	Open over File	+161
04DD15B	Drawer over Door	+316
04TP15B	Trash Pullout	+554

Please consult **page 7** for the palette of DatesWeiser finishes. Natural stone, non-standard glass and veneer, and other technology options are available. Please email **customerservice@datesweiser.com** for a custom quote. Consult technical information on **page 319** for construction details and technical information.

Highline Twenty-Five Credenza

108” Long, 34” Buffet Height
04C108B

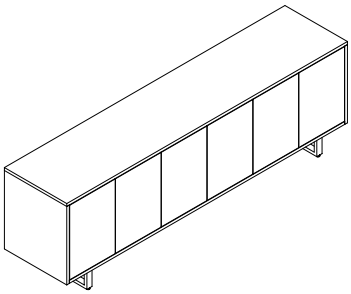

Starting Price: $11,201

108” credenza, 34” high, no top, all doors, satin lacquer case and doors, powder coat legs

Pattern Number: 04C108B

Step 1. Top

NT	No top
FT	Full Top

Step 2. Top Finish (not applicable in ‘no top’ configuration)

GC00	Clear Glass	+2,788
GC _ _	Clear Glass, back painted	+3,991
GE _ _	Etched matte Glass, back painted	+4,285
CS01	Corian Glacier White	+4,494
QS _ _	Caesarstone	+6,292

Step 3. Case Finish

SL _ _	Satin Lacquer	+0
T1	Veneer Tier 1	+2,605
T2	Veneer Tier 2	+5,832
HG _ _	High Gloss Polyester	+12,952

Step 4. Leg Finish

MC _ _	Powder Coat	+0
PM01	Polished Chrome	+342
PM02	Satin Nickel	+342
PM03	Oil Rubbed Bronze	+638

Step 5. Door/Drawer Face Finish

SL _ _	Satin Lacquer	+0
T1 _ _	Veneer Tier 1	+653
T2 _ _	Veneer Tier 2	+1,461
HG _ _	High Gloss Polyester	+3,237

Step 6. Configuration

Specify Left to Right: Select single or double space components for 6 available positions. When any double space component is selected, insert code in desired starting position and XXXX in subsequent position.

04 _ _ _ _ B	Position 1
04 _ _ _ _ B	Position 2
04 _ _ _ _ B	Position 3
04 _ _ _ _ B	Position 4
04 _ _ _ _ B	Position 5
04 _ _ _ _ B	Position 6

DOUBLE SPACE COMPONENTS

04DR36B	Doors w/adjustable shelf	0
04FF36B	Lateral File over Lateral File	+423
04OF36B	Open over Lateral File	+375
04DD36B	Drawer over Doors	+679
04TP36B	Trash Pullout	+1,172
04AV36B	2 Door AV	+449

SINGLE SPACE COMPONENTS

04DR18B	Door w/adjustable shelf	0
04FF18B	File over File	+212
04OF85B	Open over File	+187
04DD18B	Drawer over Door	+340
04TP18B	Trash Pullout	+586

Please consult **page 7** for the palette of DatesWeiser finishes. Natural stone, non-standard glass and veneer, and other technology options are available. Please email **customerservice@datesweiser.com** for a custom quote. Consult technical information on **page 319** for construction details and technical information.

Highline Twenty-Five Credenza

60” Long, 29” Conference Height
04C60C

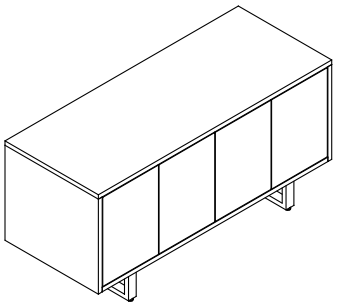

Starting Price: $8,200

60” credenza, 29” high, no top, all doors, satin lacquer case and doors, powder coat legs

Pattern Number: 04C60C

Step 1. Top

NT	No top
FT	Full Top

Step 2. Top Finish (not applicable in ‘no top’ configuration)

GC00	Clear Glass	+1,922
GC _ _	Clear Glass, back painted	+2,242
GE _ _	Etched matte Glass, back painted	+2,413
CS01	Corian Glacier White	+2,520
QS _ _	Caesarstone	+4,875

Step 3. Case Finish

SL _ _	Satin Lacquer	+0
T1	Veneer Tier 1	+1,723
T2	Veneer Tier 2	+3,724
HG _ _	High Gloss Polyester	+8,218

Step 4. Leg Finish

MC _ _	Powder Coat	+0
PM01	Polished Chrome	+342
PM02	Satin Nickel	+342
PM03	Oil Rubbed Bronze	+638

Step 5. Door/Drawer Face Finish

SL _ _	Satin Lacquer	+0
T1 _ _	Veneer Tier 1	+428
T2 _ _	Veneer Tier 2	+931
HG _ _	High Gloss Polyester	+2,054

Step 6. Configuration

Specify Left to Right: Select single or double space components for 4 available positions. When any double space component is selected, insert code in desired starting position and XXXX in subsequent position.

04 _ _ _ _ C	Position 1
04 _ _ _ _ C	Position 2
04 _ _ _ _ C	Position 3
04 _ _ _ _ C	Position 4

DOUBLE SPACE COMPONENTS

04DR30C	Doors w/adjustable shelf	0
04DF30C	Drawer over Lateral File	+380
04OF30C	Open over Lateral File	+321
04DD30C	Drawer over Doors	+631
04TP30C	Trash Pullout	+1,107
04AV30C	2 Door AV	+375

SINGLE SPACE COMPONENTS

04DR15C	Door w/adjustable shelf	0
04DF15C	Drawer over File	+190
04OF15C	Open over File	+161
04DD15C	Drawer over Door	+316
04TP15C	Trash Pullout	+554

Please consult **page 7** for the palette of DatesWeiser finishes. Natural stone, non-standard glass and veneer, and other technology options are available. Please email **customerservice@datesweiser.com** for a custom quote. Consult technical information on **page 319** for construction details and technical information.

Highline Twenty-Five Credenza

72” Long, 29” Conference Height
04C72C

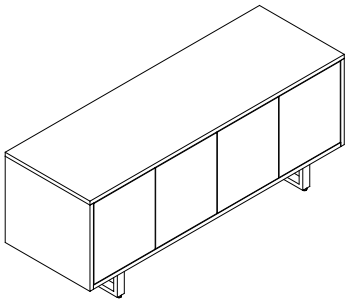

Starting Price: $8,639

72” credenza, 29” high, no top, all doors, satin lacquer case and doors, powder coat legs

Pattern Number: 04C72C

Step 1. Top

NT	No top
FT	Full Top

Step 2. Top Finish (not applicable in ‘no top’ configuration)

GC00	Clear Glass	+2,018
GC _ _	Clear Glass, back painted	+2,456
GE _ _	Etched matte Glass, back painted	+2,659
CS01	Corian Glacier White	+2,925
QS _ _	Caesarstone	+5,850

Step 3. Case Finish

SL _ _	Satin Lacquer	+0
T1	Veneer Tier 1	+1,889
T2	Veneer Tier 2	+4,077
HG _ _	High Gloss Polyester	+9,432

Step 4. Leg Finish

MC _ _	Powder Coat	+0
PM01	Polished Chrome	+342
PM02	Satin Nickel	+342
PM03	Oil Rubbed Bronze	+638

Step 5. Door/Drawer Face Finish

SL _ _	Satin Lacquer	+0
T1 _ _	Veneer Tier 1	+471
T2 _ _	Veneer Tier 2	+1,022
HG _ _	High Gloss Polyester	+2,359

Step 6. Configuration

Specify Left to Right: Select single or double space components for 4 available positions. When any double space component is selected, insert code in desired starting position and XXXX in subsequent position.

04 _ _ _ _ C	Position 1
04 _ _ _ _ C	Position 2
04 _ _ _ _ C	Position 3
04 _ _ _ _ C	Position 4

DOUBLE SPACE COMPONENTS

04DR36C	Doors w/adjustable shelf	0
04FF36C	Drawer over Lateral File	+423
04OF36C	Open over Lateral File	+375
04DD36C	Drawer over Doors	+679
04TP36C	Trash Pullout	+1,172
04AV36C	2 Door AV	+449

SINGLE SPACE COMPONENTS

04DR18C	Door w/adjustable shelf	0
04FF18C	Drawer over File	+212
04OF85C	Open over File	+187
04DD18C	Drawer over Door	+340
04TP18C	Trash Pullout	+586

Please consult **page 7** for the palette of DatesWeiser finishes. Natural stone, non-standard glass and veneer, and other technology options are available. Please email **customerservice@datesweiser.com** for a custom quote. Consult technical information on **page 319** for construction details and technical information.

Highline Twenty-Five Credenza

90” Long, 29” Conference Height
04C90C

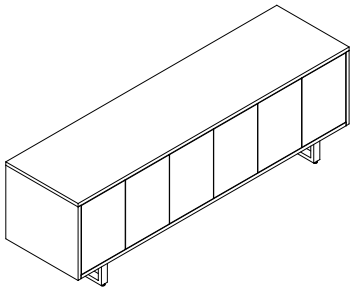

Starting Price: $10,522

90” credenza, 29” high, no top, all doors, satin lacquer case and doors, powder coat legs

Pattern Number: 04C90C

Step 1. Top

NT	No top
FT	Full Top

Step 2. Top Finish (not applicable in ‘no top’ configuration)

GC00	Clear Glass	+2,211
GC _ _	Clear Glass, back painted	+2,787
GE _ _	Etched matte Glass, back painted	+3,033
CS01	Corian Glacier White	+3,656
QS _ _	Caesarstone	+7,312

Step 3. Case Finish

SL _ _	Satin Lacquer	+0
T1	Veneer Tier 1	+2,370
T2	Veneer Tier 2	+5,168
HG _ _	High Gloss Polyester	+11,133

Step 4. Leg Finish

MC _ _	Powder Coat	+0
PM01	Polished Chrome	+342
PM02	Satin Nickel	+342
PM03	Oil Rubbed Bronze	+638

Step 5. Door/Drawer Face Finish

SL _ _	Satin Lacquer	+0
T1 _ _	Veneer Tier 1	+594
T2 _ _	Veneer Tier 2	+1,295
HG _ _	High Gloss Polyester	+2,782

Step 6. Configuration

Specify Left to Right: Select single or double space components for 6 available positions. When any double space component is selected, insert code in desired starting position and XXXX in subsequent position.

04 _ _ _ _ **C**	Position 1	+ _ _ _ _
04 _ _ _ _ **C**	Position 2	+ _ _ _ _
04 _ _ _ _ **C**	Position 3	+ _ _ _ _
04 _ _ _ _ **C**	Position 4	+ _ _ _ _
04 _ _ _ _ **C**	Position 5	+ _ _ _ _
04 _ _ _ _ **C**	Position 6	+ _ _ _ _

DOUBLE SPACE COMPONENTS

04DR30C	Doors w/adjustable shelf	0
04DF30C	Drawer over Lateral File	+380
04OF30C	Open over Lateral File	+321
04DD30C	Drawer over Doors	+631
04TP30C	Trash Pullout	+1,107
04AV30C	2 Door AV	+375

SINGLE SPACE COMPONENTS

04DR15C	Door w/adjustable shelf	0
04DF15C	Drawer over File	+190
04OF15C	Open over File	+161
04DD15C	Drawer over Door	+316
04TP15C	Trash Pullout	+554

Please consult **page 7** for the palette of DatesWeiser finishes. Natural stone, non-standard glass and veneer, and other technology options are available. Please email **customerservice@datesweiser.com** for a custom quote. Consult technical information on **page 319** for construction details and technical information.

Highline Twenty-Five Credenza

108” Long, 29” Conference Height
04C108C

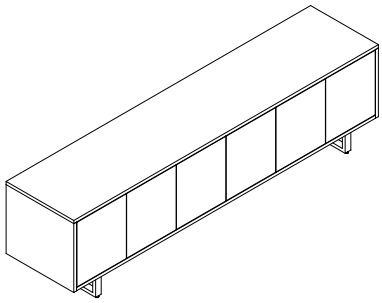

Starting Price: $11,201

108” credenza, 29” high, no top, all doors, satin lacquer case and doors, powder coat legs

Pattern Number: 04C108C

Step 1. Top

NT	No top
FT	Full Top

Step 2. Top Finish (not applicable in ‘no top’ configuration)

GC00	Clear Glass	+2,788
GC _ _	Clear Glass, back painted	+3,991
GE _ _	Etched matte Glass, back painted	+4,285
CS01	Corian Glacier White	+4,387
QS _ _	Caesarstone	+8,775

Step 3. Case Finish

SL _ _	Satin Lacquer	+0
T1	Veneer Tier 1	+2,605
T2	Veneer Tier 2	+5,832
HG _ _	High Gloss Polyester	+12,952

Step 4. Leg Finish

MC _ _	Powder Coat	+0
PM01	Polished Chrome	+342
PM02	Satin Nickel	+342
PM03	Oil Rubbed Bronze	+638

Step 5. Door/Drawer Face Finish

SL _ _	Satin Lacquer	+0
T1 _ _	Veneer Tier 1	+653
T2 _ _	Veneer Tier 2	+1,461
HG _ _	High Gloss Polyester	+3,237

Step 6. Configuration

Specify Left to Right: Select single or double space components for 6 available positions. When any double space component is selected, insert code in desired starting position and XXXX in subsequent position.

04 _ _ _ _ **C**	Position 1	+ _ _ _ _
04 _ _ _ _ **C**	Position 2	+ _ _ _ _
04 _ _ _ _ **C**	Position 3	+ _ _ _ _
04 _ _ _ _ **C**	Position 4	+ _ _ _ _
04 _ _ _ _ **C**	Position 5	+ _ _ _ _
04 _ _ _ _ **C**	Position 6	+ _ _ _ _

DOUBLE SPACE COMPONENTS

04DR36C	Doors w/adjustable shelf	0
04FF36C	Drawer over Lateral File	+423
04OF36C	Open over Lateral File	+375
04DD36C	Drawer over Doors	+679
04TP36C	Trash Pullout	+1,172
04AV36C	2 Door AV	+449

SINGLE SPACE COMPONENTS

04DR18C	Door w/adjustable shelf	0
04FF18C	Drawer over File	+212
04OF85C	Open over File	+187
04DD18C	Drawer over Door	+340
04TP18C	Trash Pullout	+586

Please consult **page 7** for the palette of DatesWeiser finishes. Natural stone, non-standard glass and veneer, and other technology options are available. Please email **customerservice@datesweiser.com** for a custom quote. Consult technical information on **page 319** for construction details and technical information.

Accessories

Power & Connectivity
Slide Out Power Box

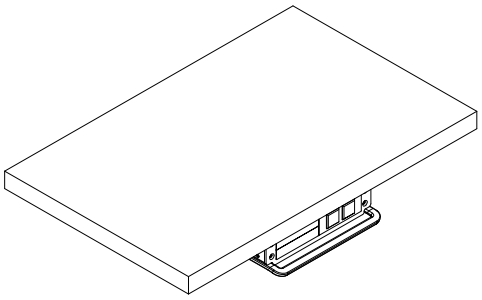

Hardwired Starting Price:	$1,776	Plug In Starting Price:	$1,507

Pattern Number: 00UMSOHW

Includes : (1) AC Power Module - Hardwired (HW)
(2) Single Space Blank Plates

Finish : Black Powder Coat

Pattern Number: 00UMSOPI

Includes : (1) AC Power Module - Hardwired (HW)
(2) Single Space Blank Plates

Finish: Black Power Coat

The Slide-Out Power Box is designed to be mounted on the under-side of a tabletop to provide easy access to power, data and communication feeds by the End User with an option to slide it back out of the way if not needed or if more seating space is required.

The unit is provided with 1 AC Power Module in both hardwire and plug-in options.

Its design also allows the use of standard Extron Single or Double AAP modules, ordered separately by the End User from Extron. See Extron's website at **https://www.extron.com/product/aap selectorpopup.aspx** to see what's available.

The Slide-Out Power Box mounts to the under-side of a wood tabletop using wood screws and comes with all the hardware required to attach it to any Highline Table.

It can be mounted in any desired location, but it's recommended to be mounted in-between users in such a way that when the box is extended, it is flush with the edge of the tabletop with only the handle protruding past.

Accessories

Power & Connectivity
Slide Out Power Box

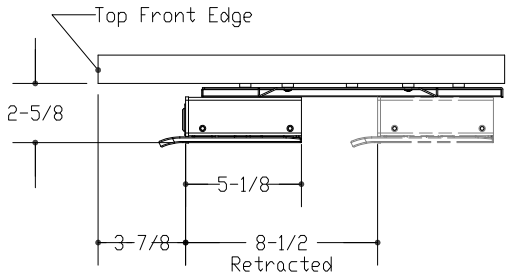

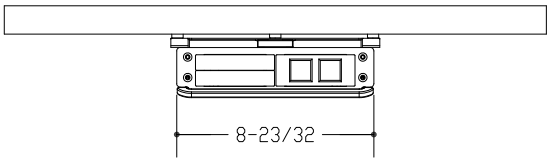

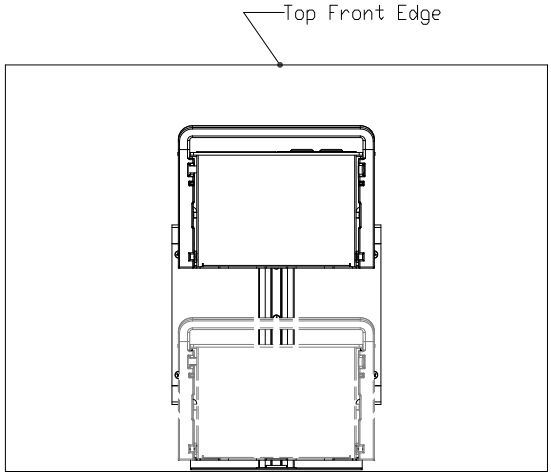

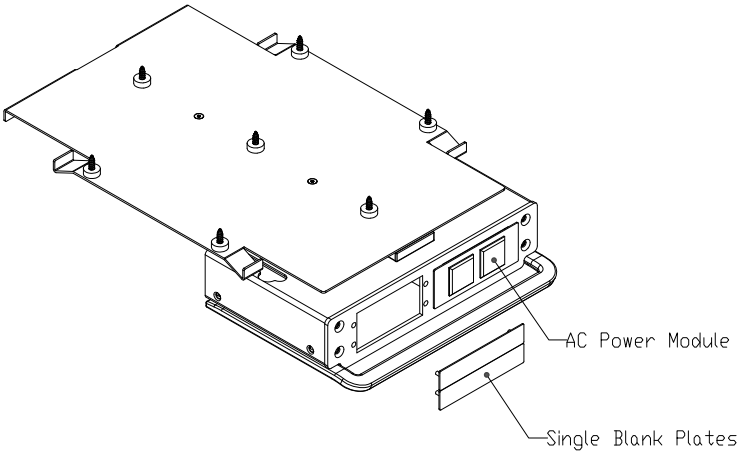

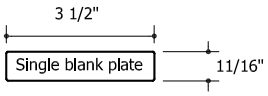

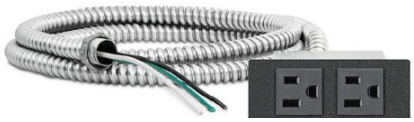

AC Module Hardwired (HW)
- 3/8” diameter x 6’ long metal-clad cable with 6” pigtail
- Additional knockouts for series wiring
- 12A max per module

AC
Module Plug İn (PI)
- 7.5’ detachable soft cord
- 6A max per module

Technical Information

DATESWEISER

Highline Collection

Conference Tables
Overall Elevations and Clearance

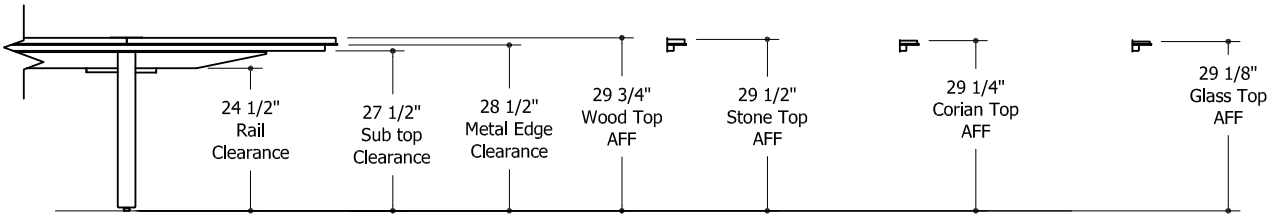

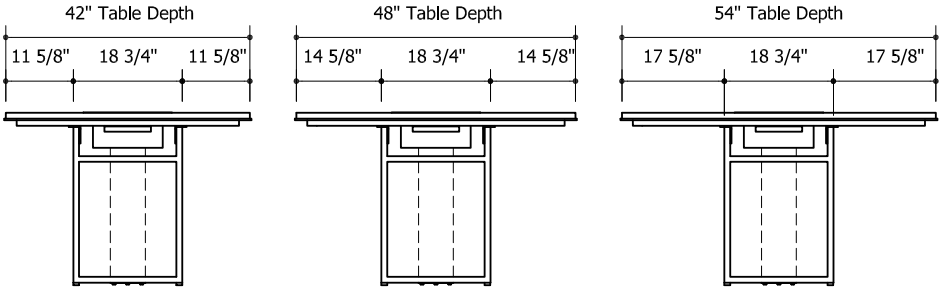

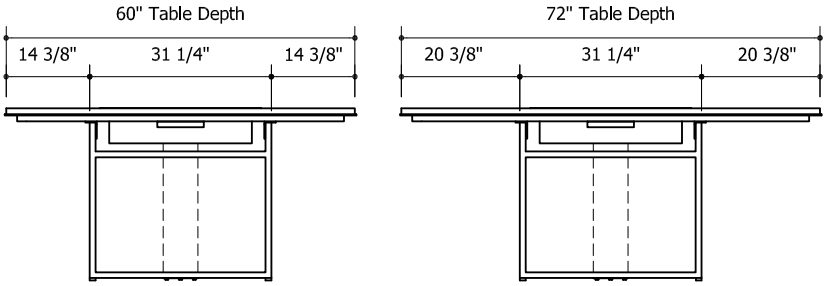

Highline Collection

Conference Tables
Top Construction

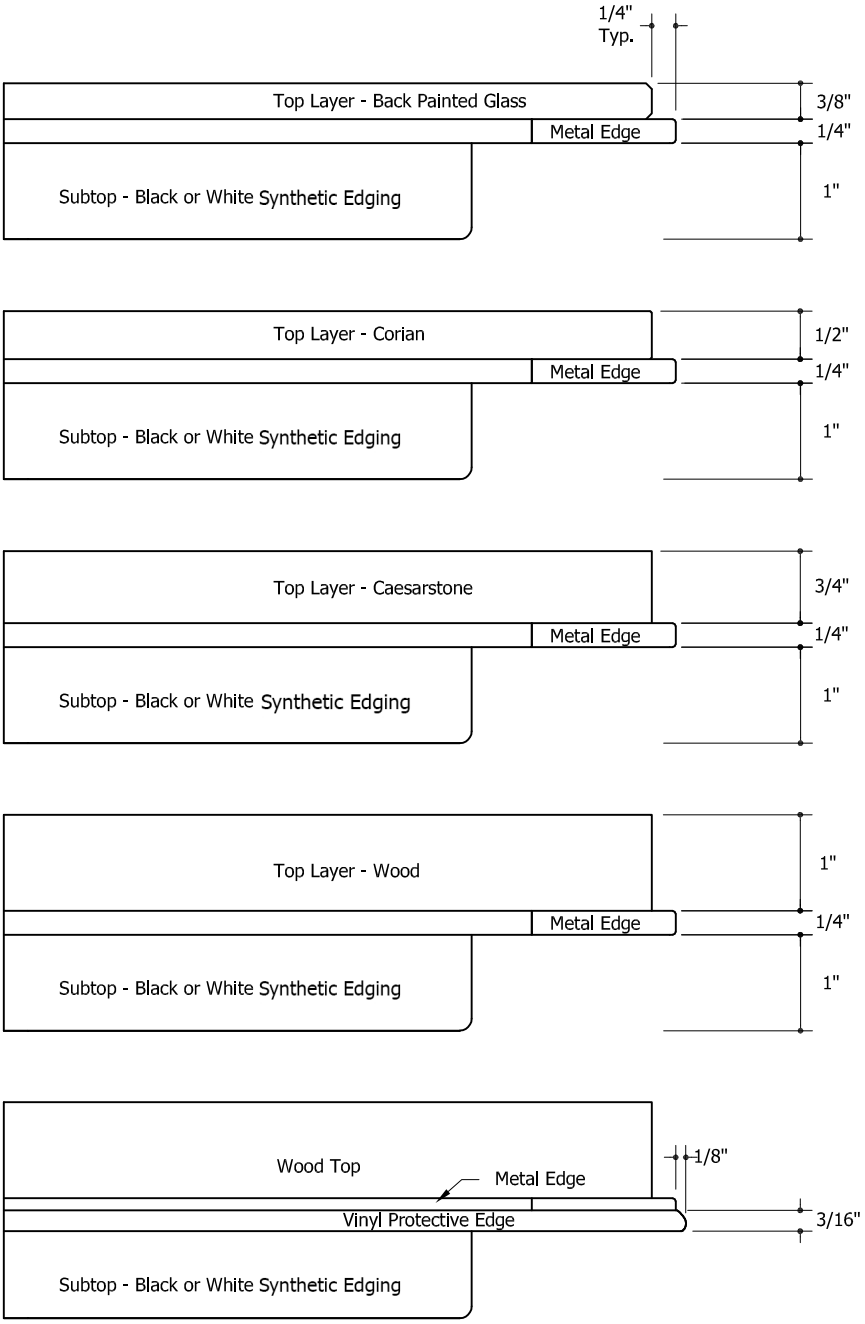

Highline Collection

Conference Tables
Base Construction / Wire Management Column

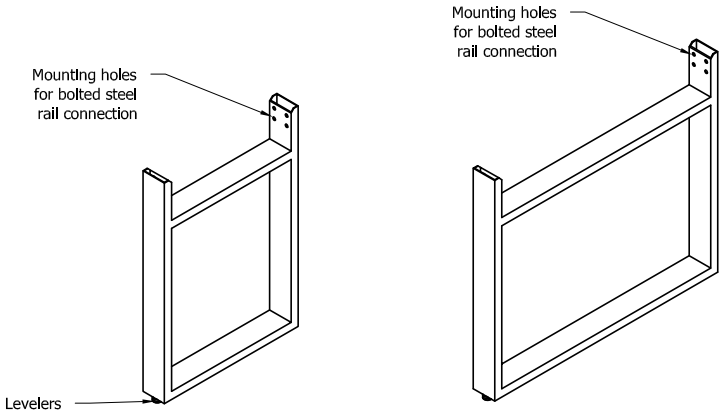

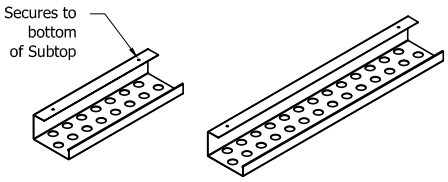

Highline Small Base
- Used on 42” / 48” / 54” widths
- Also used in combination with large bases for some elliptical and trapezoid configurations
- Construction: 1” x 3” tubular steel

Highline Large Base
- Used on 60” / 72” widths
- Also used in combination with small bases for some elliptical and trapezoid configurations
- Construction: 1” x 3” tubular steel

Wire Manager
- Length varies by table 16” or 28” x 5” deep x 3” high
- Construction: Steel with black powder coat metallic finish (MC12)

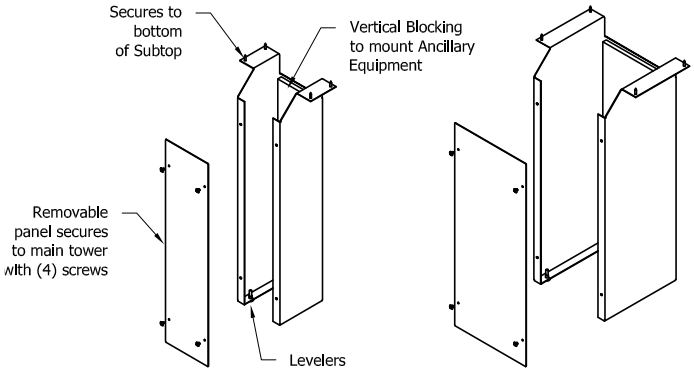

02WMC6X6 02WMC10X10

Wire Management Column
- Ordered separately but required with all power options
- Location is flexible but placement on table centerline is recommended

02WMC6X6	6″ x 6″ with clear inside of 4″ x 5″
02WMC10X10	10″ x 10″ with clear inside of 8″ x 9″

Highline Collection

Conference Tables
Power & Connectivity
Table Top: Small and Large

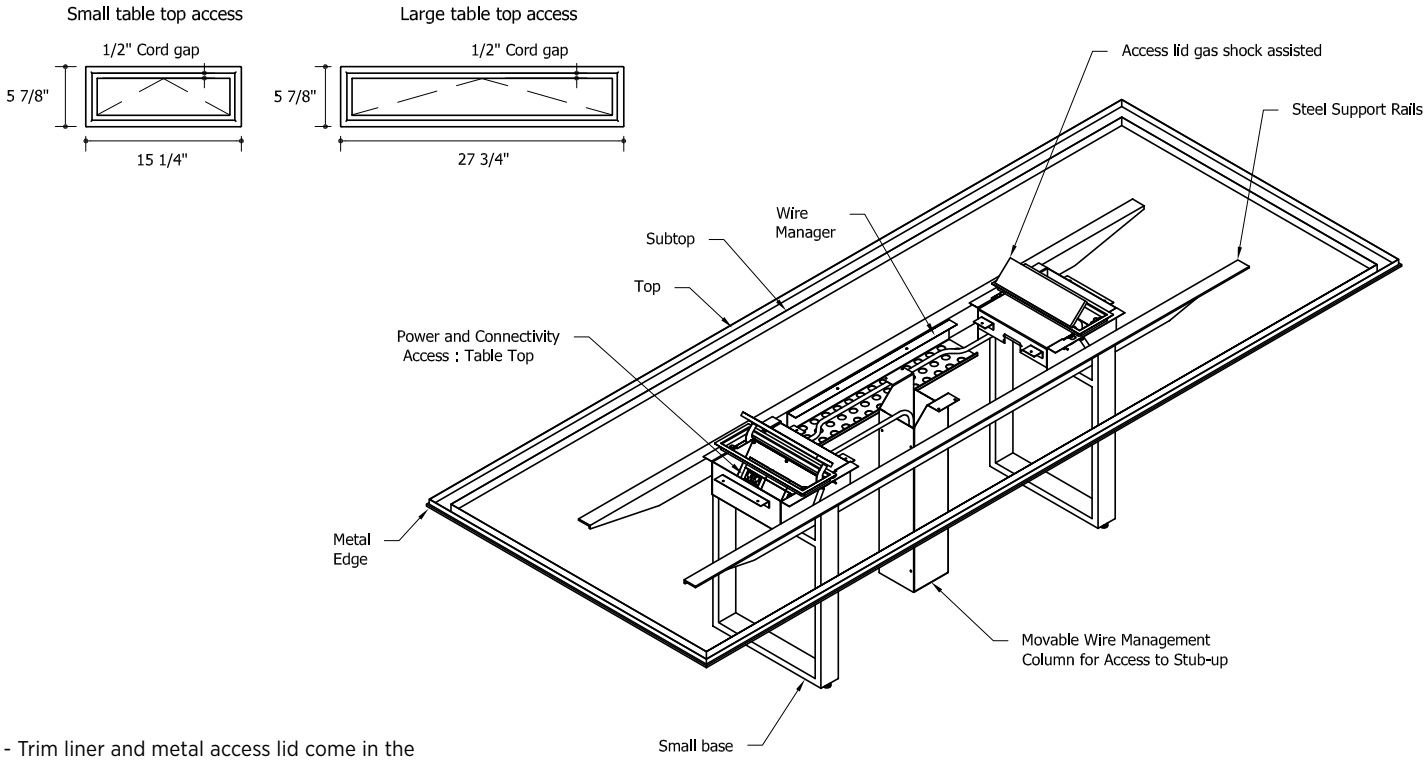

- Trim liner and metal access lid come in the specified metal finish
- Small access lid used on 42” / 48″ / 54” tables
- Large access lid used on 60” / 72″ tables

Small Table Top access (shown populated)

Small Table Top access (shown with optional faceplate)

- Provided with 2 AC power modules - specify hardwired (HW) or plug in (PI), 3 double space and 2 single space blank plates
- For additional connectivity, replace blank plates with Extron single or double space AAP plates as desired. For more information see **extron.com**

Highline Collection

Conference Tables
Power & Connectivity
Table Top: Small

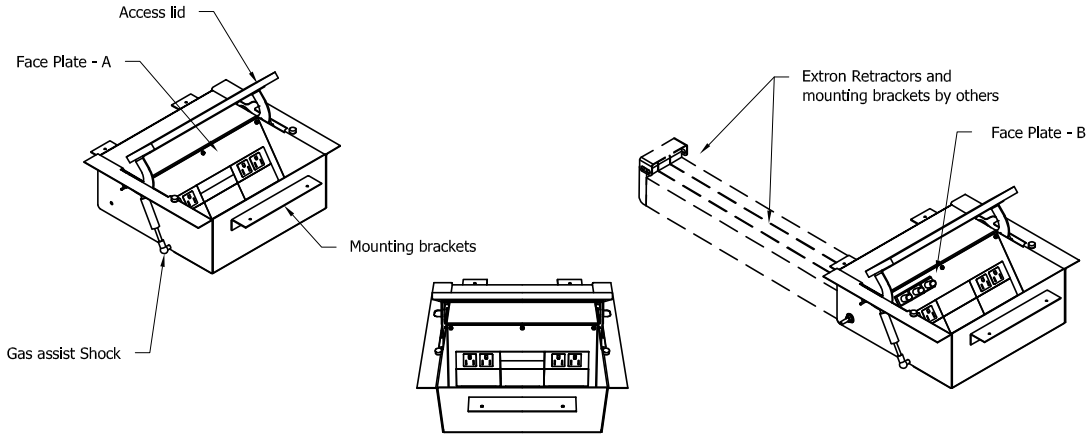

- Interior: Black powder coat metallic finish (MC12)
- Used on 42” / 48” / 54” width conference tables
- Also used in combination with large boxes for some elliptical and trapezoid configurations
- Connectivity: Face Plate "A" Qty 1 is standard
- Connectivity: Face Plate "B" is used with Extron retractors
- Face Plates are removable to allow for easy population by AV installer
- Provided with 2 AC power modules - specify hardwired (HW) or plug in (PI), 3 double space and 2 single space blank plates
- For additional connectivity, replace blank plates with Extron single or double space AAP plates as desired. For more information see **extron.com**

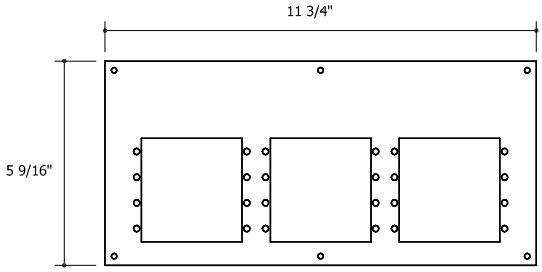

Connectivity Face Plate "A"

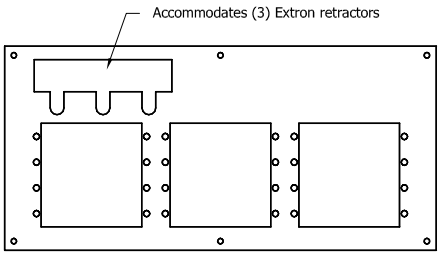

Optional Connectivity Face Plate "B"

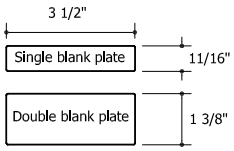

AC Module Hardwired (HW)
- 3/8” diameter x 6’ long metal-clad cable with 6” pigtail
- Additional knockouts for series wiring
- 12A max per module

AC Module Plug In (PI)
- 7.5’ detachable soft cord
- 6A max per module

Highline Collection

Conference Tables
Power & Connectivity
Table Top: Large

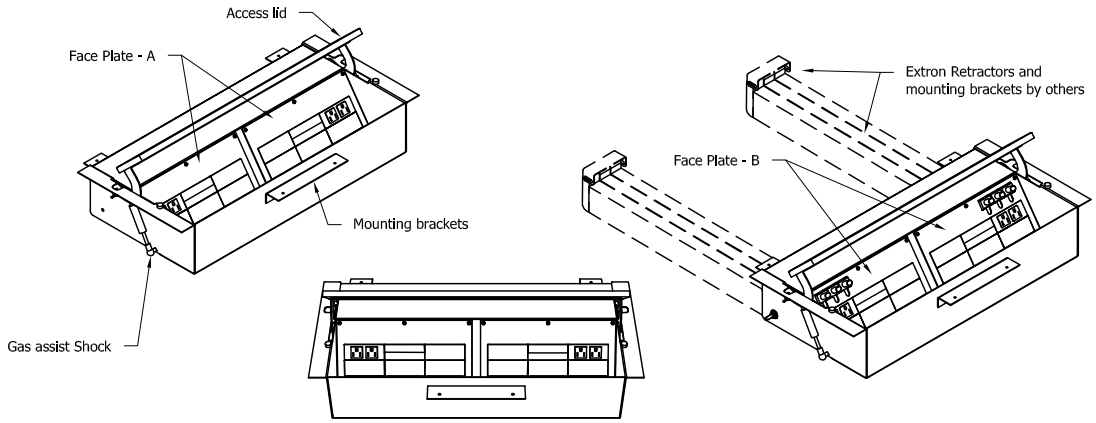

- Interior: Black powder coat metallic finish (MC12)
- Used on 60” / 72” width tables
- Also used in combination with Highline Small boxes for some elliptical and trapezoid configurations
- Connectivity: Face Plate "A" Qty 2 is standard
- Connectivity: Face Plate "B" is used with Extron retractors
- Face Plates are removable to allow for easy population by AV installer
- Provided with 2 AC power modules - specify hardwired (HW) or plug in (PI), 8 double space and 4 single space blank plates
- For additional connectivity, replace blank plates with Extron single or double space AAP plates as desired. For more information see **extron.com**

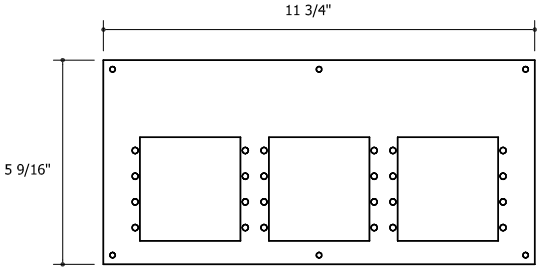

Connectivity Face Plate "A"

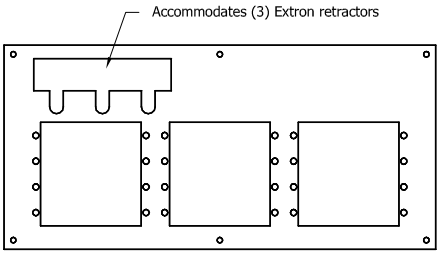

Optional Connectivity Face Plate "B"

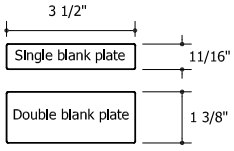

AC Module Hardwired (HW)
- 3/8” diameter x 6’ long metal clad cable with 6” pigtail
- Additional knockouts for series wiring
- 12A max per module

AC Module Plug In (PI)
- 7.5’ detachable soft cord
- 6A max per module

Conference Tables
Power & Connectivity
Undermount

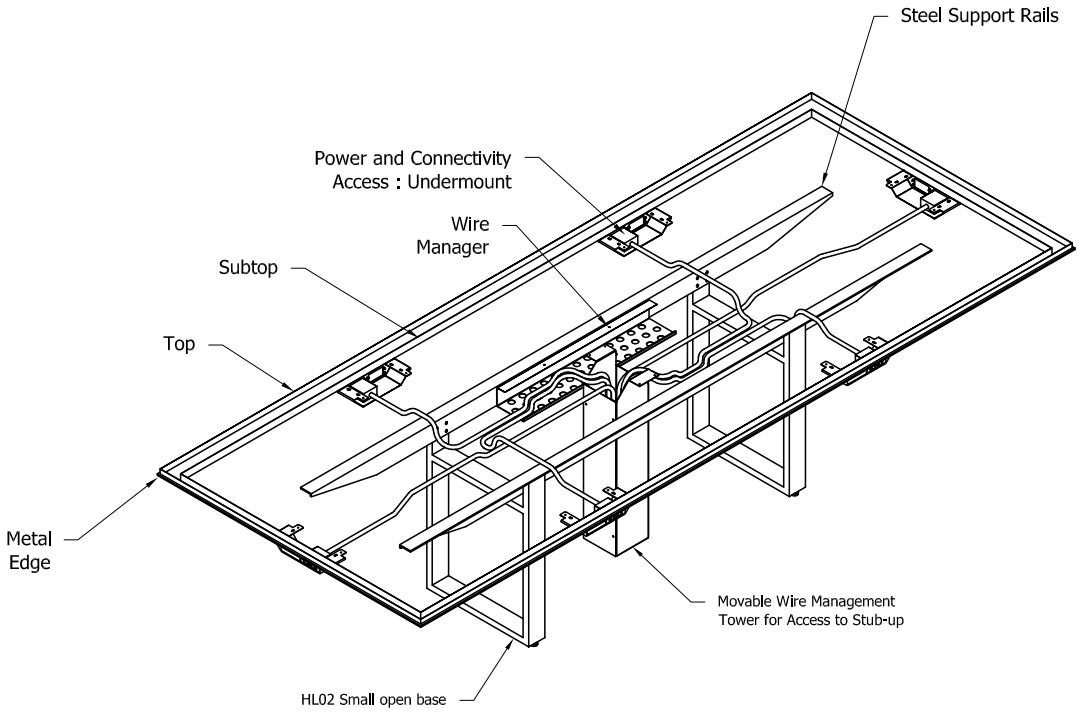

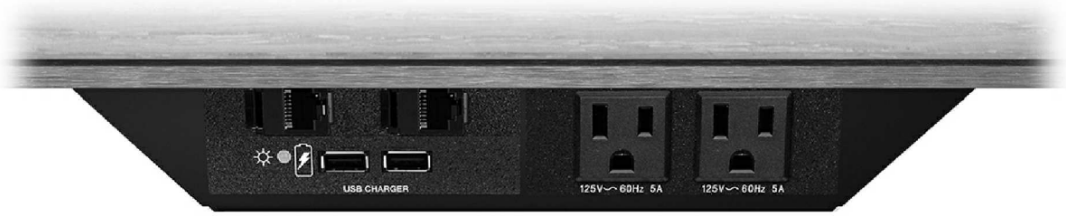

Undermount access (shown populated)
- Provided with 1 AC power module - specify hardwired (HW) or plug in (PI), and 2 single space blank plates
- For additional connectivity, replace blank plates with Extron single or double space AAP plates as desired. For more information see **extron.com**

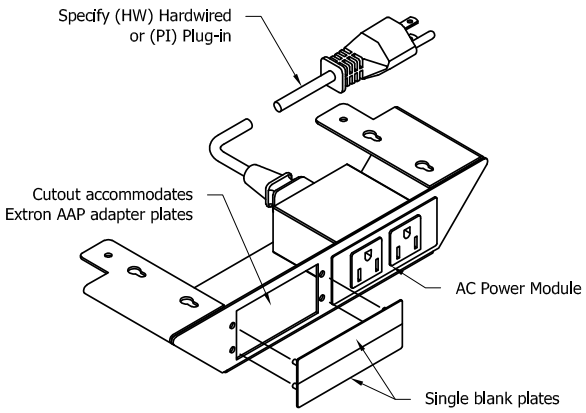

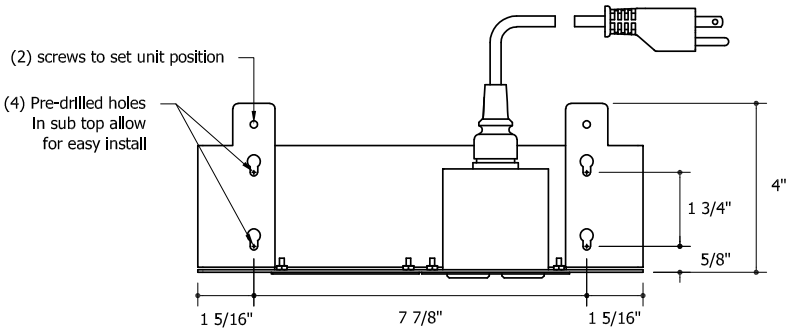

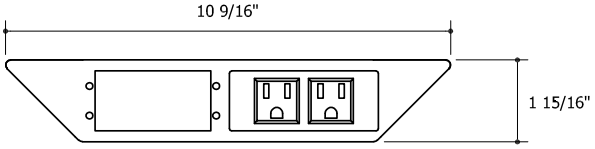

- Interior: Black powder coat metallic finish (MC12)
- Provided with 1 AC power module - specify hardwired (HW) or plug in (PI), and 2 single space blank plates
- For additional connectivity, replace blank plates with Extron single or double space AAP plates as desired. For more information see **extron.com**

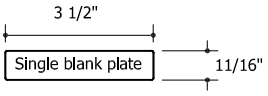

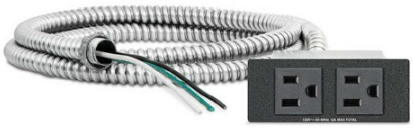

AC Module Hardwired (HW)
- 3/8” diameter x 6’ long metal-clad cable with 6” pigtail
- Additional knockouts for series wiring
- 12A max per module

AC Module Plug In (PI)
- 7.5’ detachable soft cord
- 6A max per module

Highline Collection

Meeting Tables
Overall Elevations and Clearance

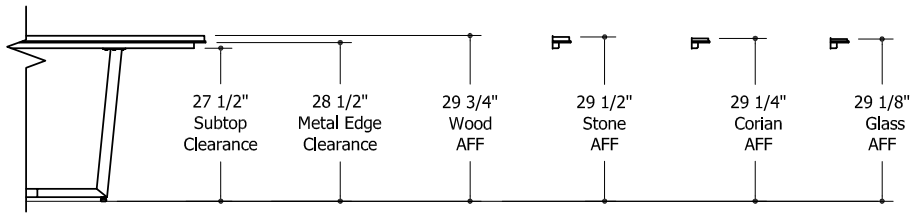

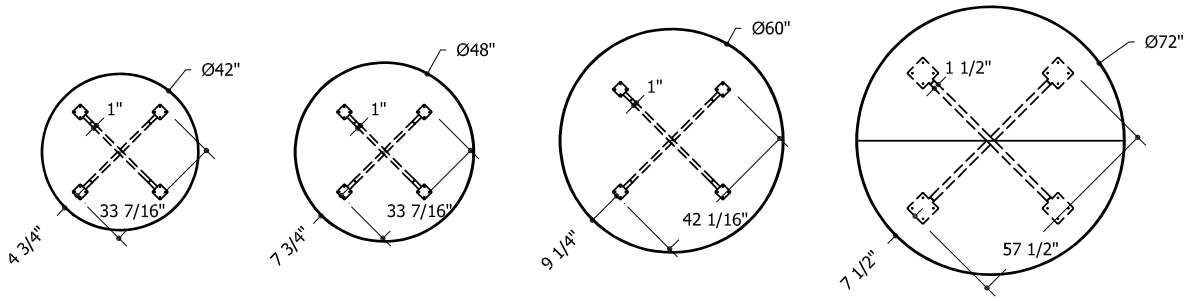

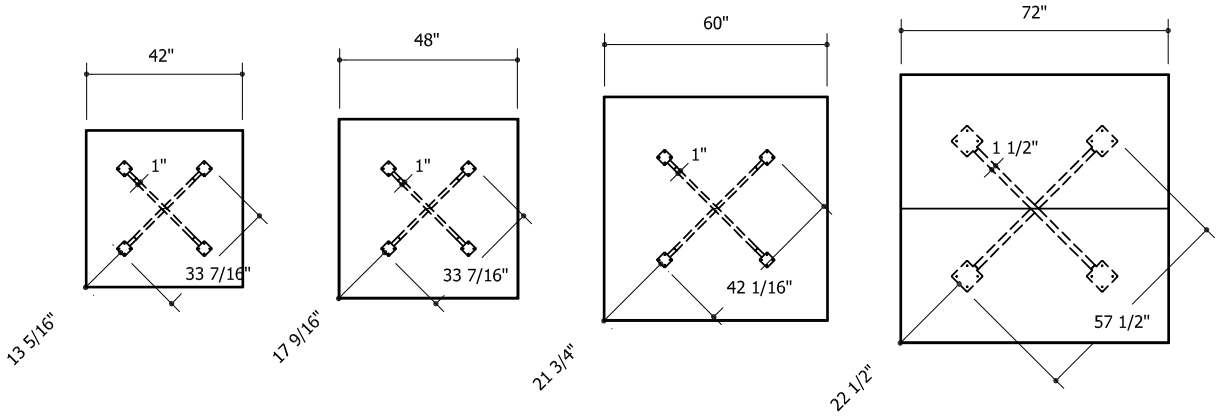

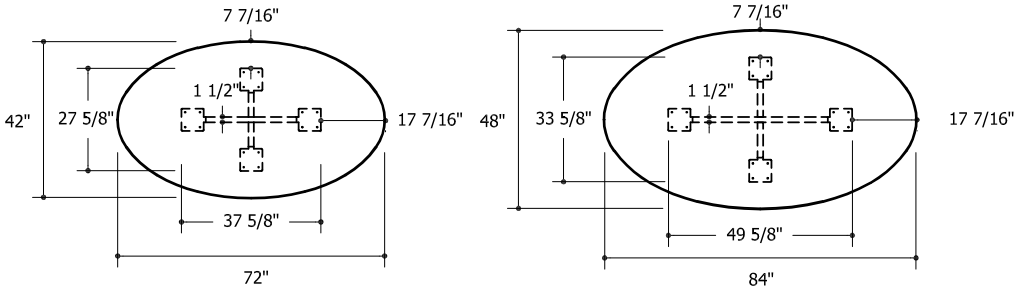

Highline Collection

Meeting Tables
Top Construction

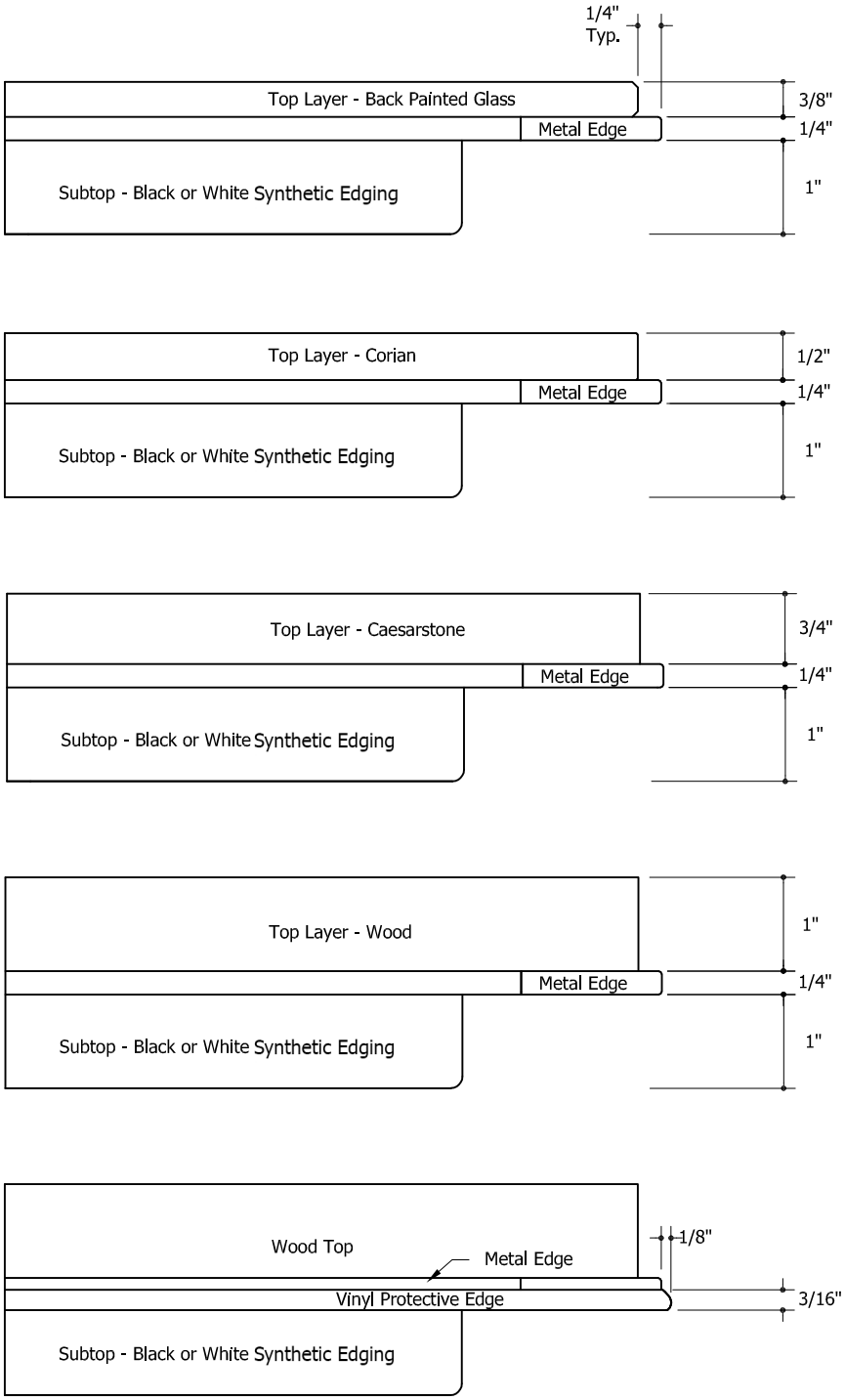

Highline Collection

Meeting Tables
Base Construction

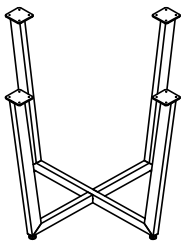

Small "X"- base

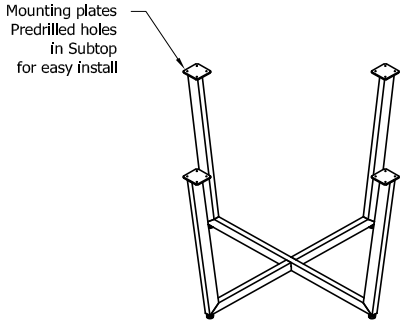

Large "X"- base

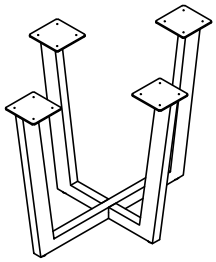

Small "XE"- base

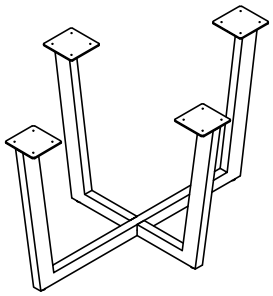

Large "XE"- base

Construction
- Tubular steel “X” base
- Small “X” base: 42″ / 48” Round and Square meeting tables
- Large “X” base: 60″ / 72” Round and Square meeting tables

- Small “XE” base: 42″ Elliptical meeting tables
- Large “XE” base: 48″ Elliptical meeting tables

- ″XP″ Wire Management base is automatically included when power and connectivity are specified on Square and Round meeting tables
- ″XEP″ Wire Management base is automatically included used when power and connectivity are specified on Elliptical meeting tables

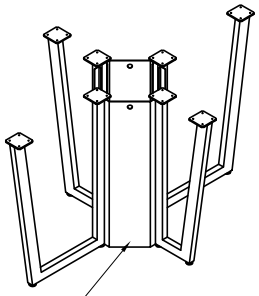

"XEP"- base

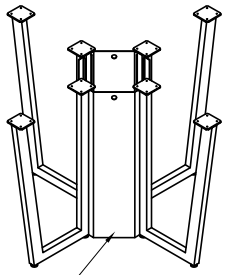

"XP"- base

Highline Collection

Meeting Tables
Power & Connectivity
Table Top

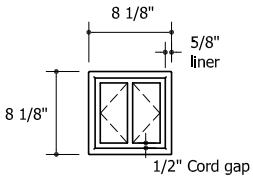

Metal Trim Liner with Matching Metal Access doors

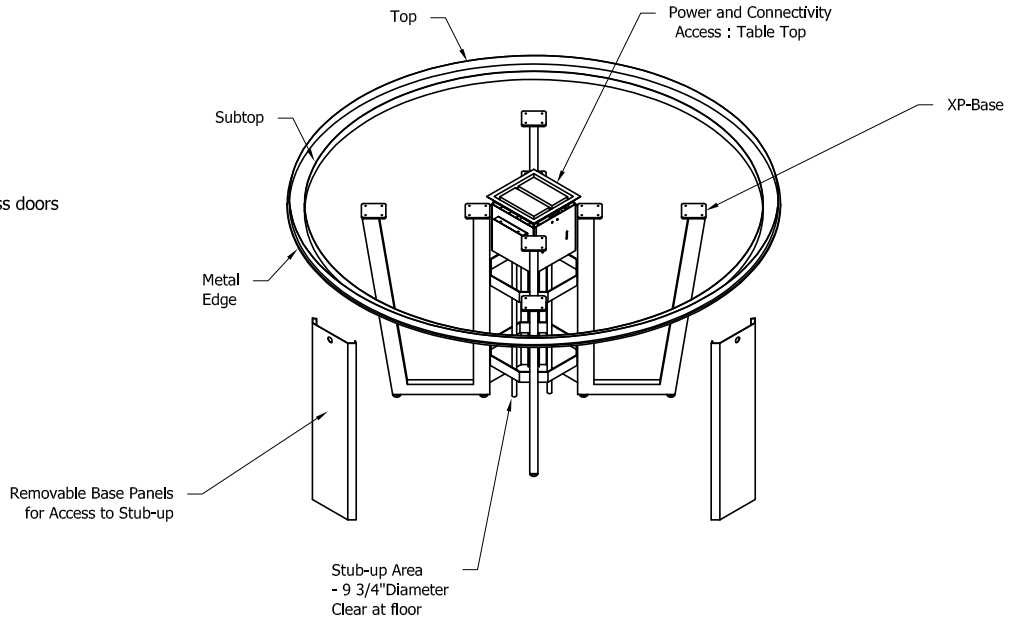

Meeting Table Top access (shown populated)
- Provided with 2 AC power modules - specify hardwired (HW) or plug in (PI), 1 double and 2 single space blank plates
- For additional connectivity, replace blank plates with Extron single or double space AAP plates as desired. For more information see **extron.com**

Highline Collection

Meeting Tables
Power & Connectivity
Table Top

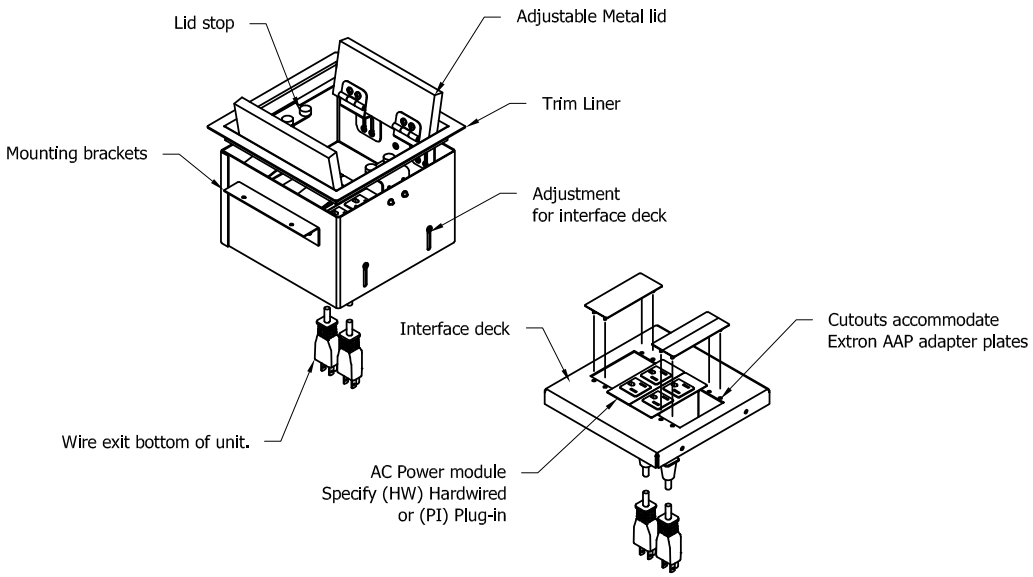

Meeting Table Top access
- Provided with 2 AC power modules - specify hardwired (HW) or plug in (PI), 1 double and 2 single space blank plates
- For additional connectivity replace blank plates with Extron single or double space AAP plates as desired. For more information see **extron.com**

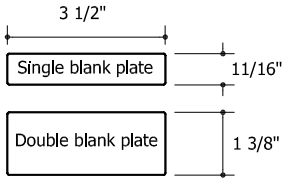

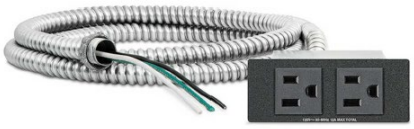

AC Module Hardwired (HW)
- 3/8" diameter x 6' long metal-clad cable with 6" pigtail
- Additional knockouts for series wiring
- 12A max per module

AC Module Plug In (PI)
- 7.5' detachable soft cord
- 6A max per module

Highline Collection

Meeting Tables
Power & Connectivity
Undermount

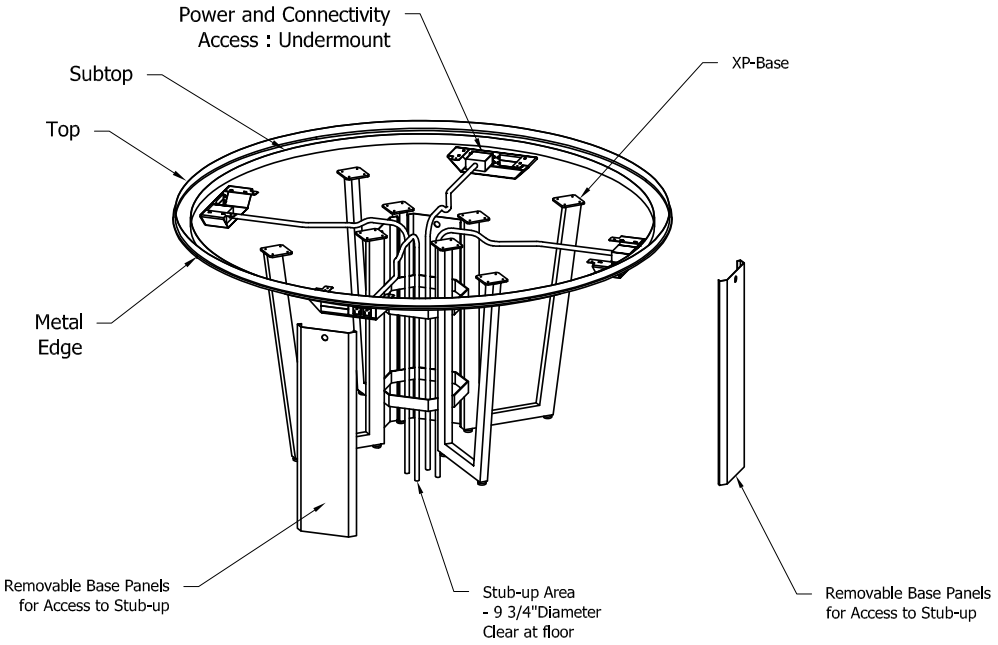

Undermount access (shown populated)
- Interior: Black powder coat metallic finish (MC12)
- Provided with 1 AC power module - specify hardwired (HW) or plug in (PI), and 2 single space blank plates
- For additional connectivity, replace blank plates with Extron single or double space AAP plates as desired. For more information see **extron.com**

Highline Collection

Meeting Tables
Power & Connectivity
Undermount

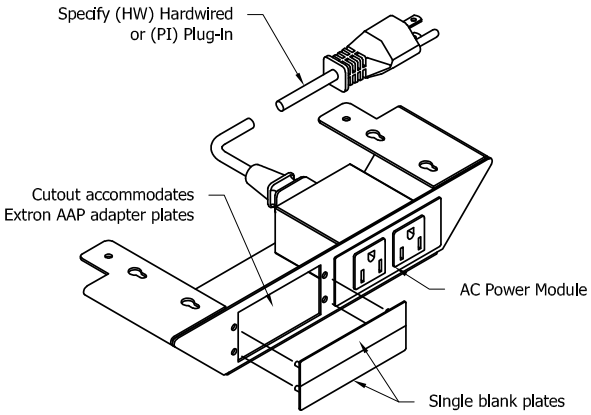

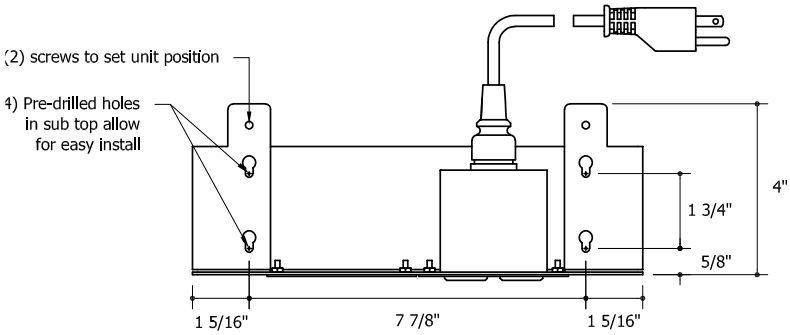

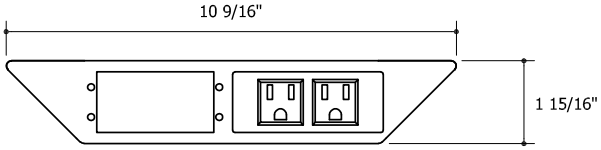

Undermount Access
- Interior: Black powder coat metallic finish (MC12)
- Provided with 1 AC power module - specify hardwired (HW) or plug in (PI), and 2 single space blank plates
- For additional connectivity, replace blank plates with Extron single or double space AAP plates as desired. For more information see **extron.com**

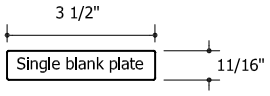

AC Module Hardwired (HW)
- 3/8” diameter x 6’ long metal-clad cable with 6” pigtail
- Additional knockouts for series wiring
- 12A max per module

AC Module Plug In (PI)
- 7.5’ detachable soft cord
- 6A max per module

Highline Collection

Credenzas
Elevations and Optional Tops

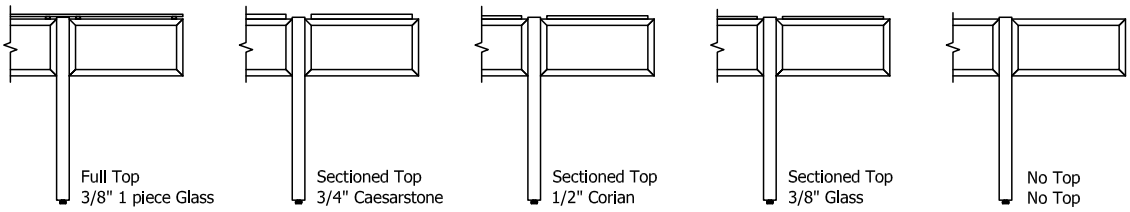

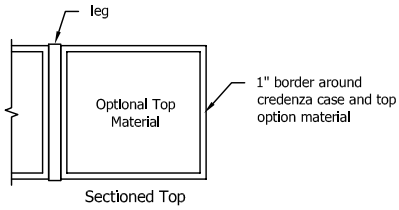

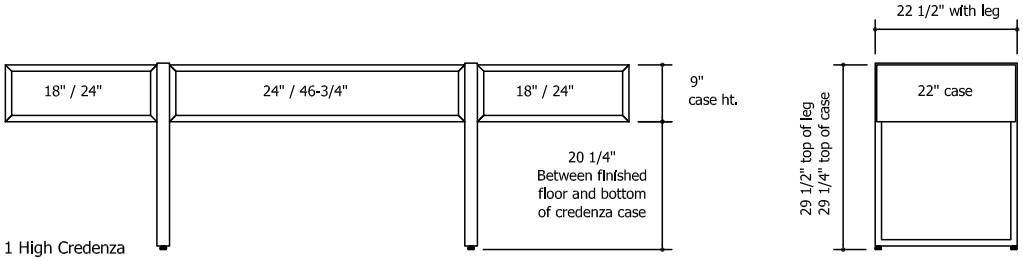

1 High Credenza

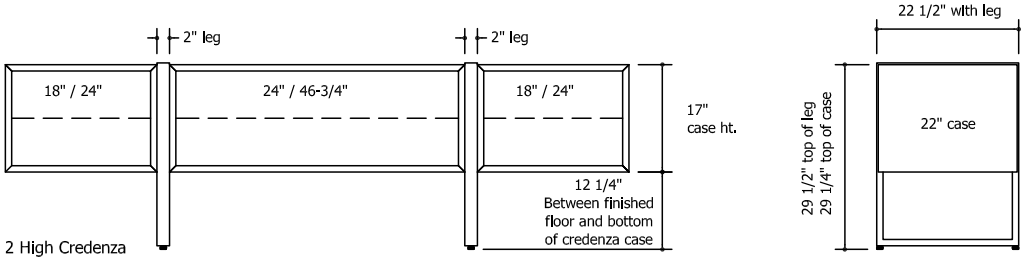

2 High Credenza

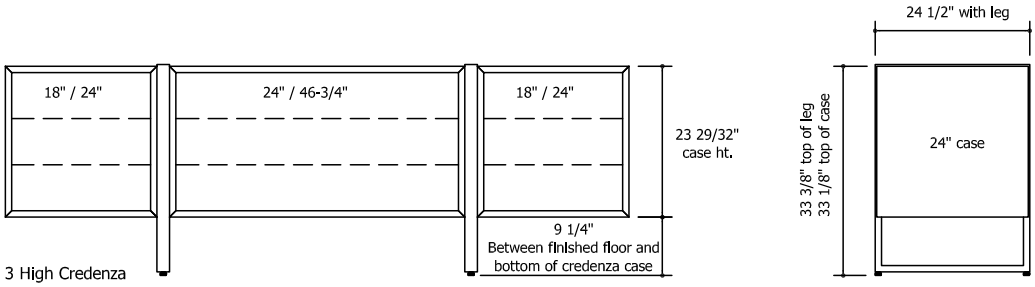

3 High Credenza

Highline Collection

Credenza
Leg and Case Details

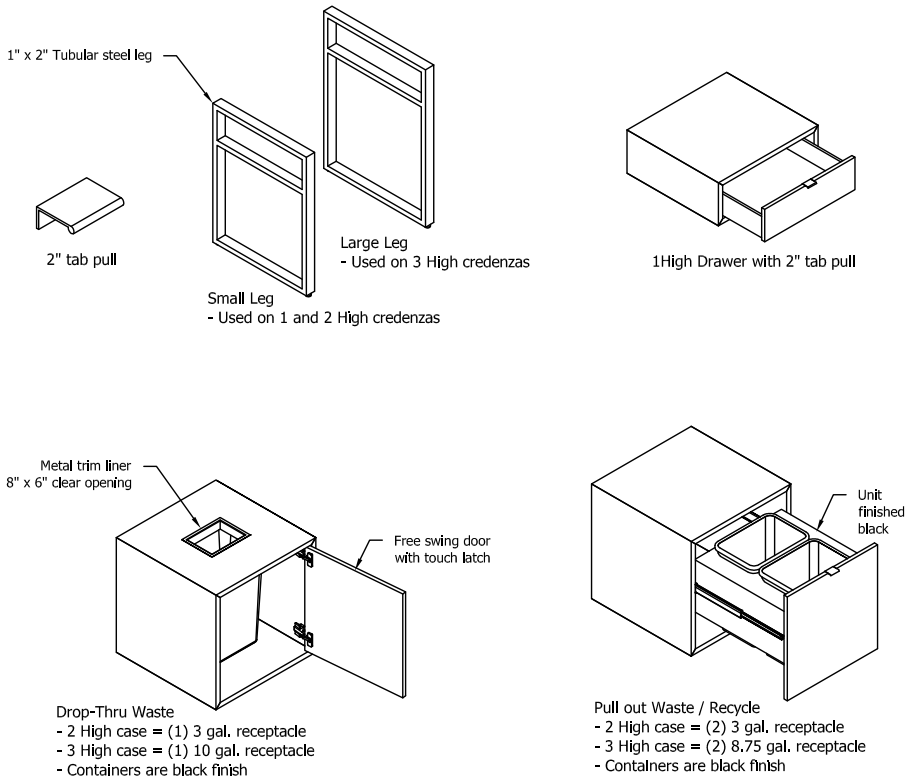

Credenza Notes
- Pulls and trash liners come in the specified metal finish
- All drawers have a 2″ tab pull located in the center of the top edge of each drawer front
- All drawers use partial extension, self-closing undermount slides
- Pull-out trash units use full extension side mount slides
- All doors use free swing hinges and touch latches
- All credenza top material finishes are secured to the case with silicone except for tops finished with full clear glass (FG GC00)
- Full clear glass (FG GC00) rests atop of 3/8” bumpers located on top of case
- Drop-through trash option is available with all top options except with full clear glass (FG GC00)

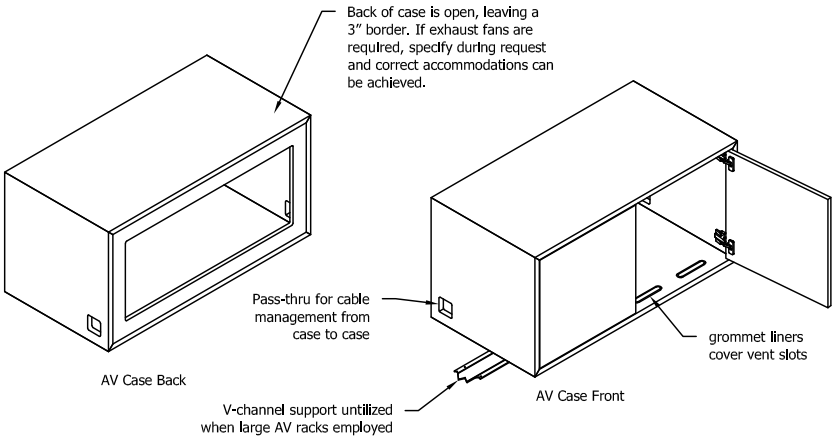

AV CASE
- All AV cases have an open back with a 3″ border
- Coordinate AV requirements with the interior clearance dimensions provided below to ensure fit

1B″ Case
14.25″ wide x 22.18″ deep x 21.15″ high

24″ Case
20.25″ wide x 22.18″ deep x 21.15″ high

47″ Case
41.25″ wide x 22.18″ deep x 21.15″ high

Highline Collection

1 High Credenza
Positional Configurations

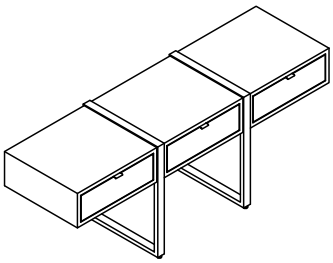

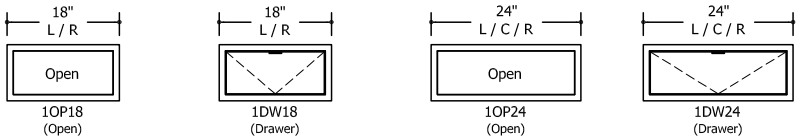

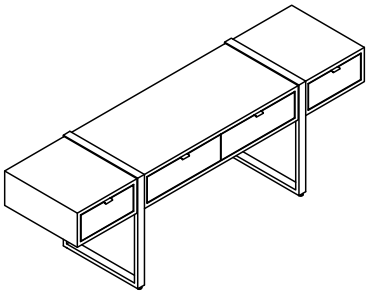

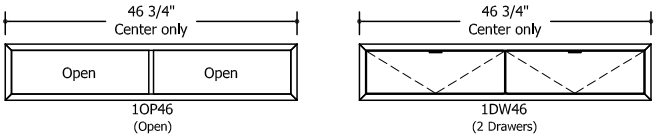

Highline Collection

2 High Credenzas
Positional Configurations

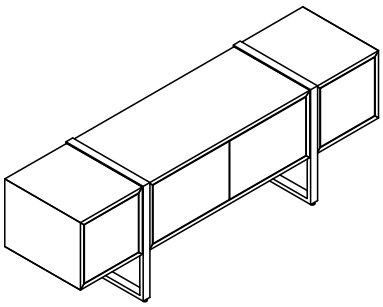

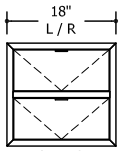

2DW18
(2 Drawers)

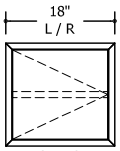

2DR18
(Door w/adj. Shelf)

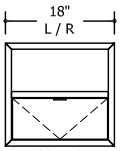

2OW18
(Open over Drawer)

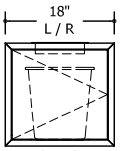

2TT18
(Trash thru Top
w/1 single can only)

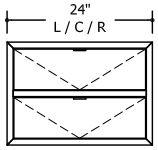

2DW24
(2 Drawers)

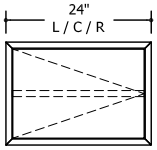

2DR24
(Door w/adj. Shelf)

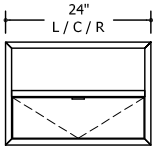

2OW24
(Open over Drawer)

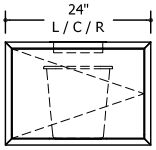

2TT24
(Trash thru Top
w/1 single can only)

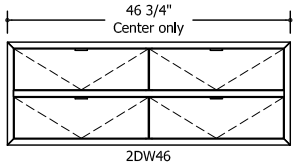

2DW46
(4 Drawers)

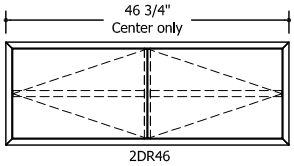

2DR46
(2 Doors w/2 adj. Shelves)

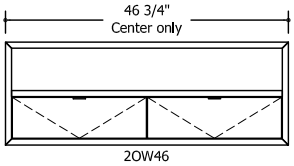

2OW46
(Open over 2 Drawers)

Highline Collection

3 High Credenzas
Positional Configurations

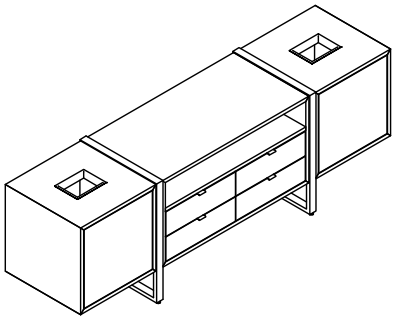

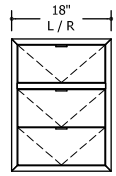

3DW18
(3 Drawers)

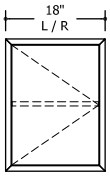

3DR18
(Door w/adj. shelf)

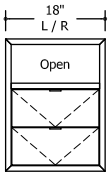

3OW18
(Open over 2 Drawers)

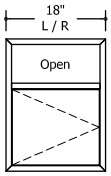

3OR18
(Open over Door)

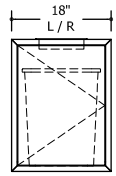

3TT18
(Trash thru top
w/1 single can only)

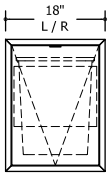

3TP18
(Trash pullout w/2
single cans front to back)

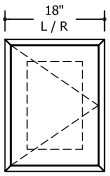

3AV18
(AV case, venting,
Large wire access)

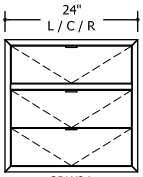

3DW24
(3 Drawers)

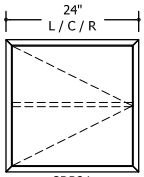

3DR24
(Door w/adj. shelf)

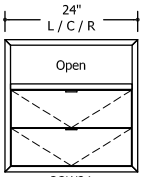

3OW24
(Open over 2 Drawers)

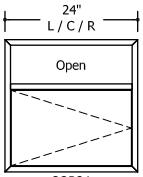

3OR24
(Open over Door)

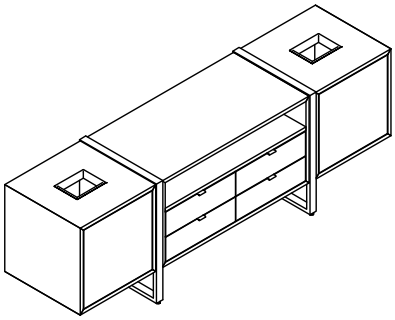

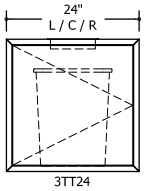

3TT24
(Trash thru top
w/1 single can only)

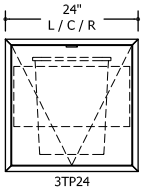

3TP24
(Trash pullout w/2
single cans front to back)

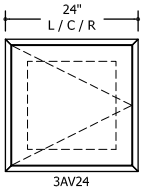

3AV24
(AV case, venting,
Large wire access)

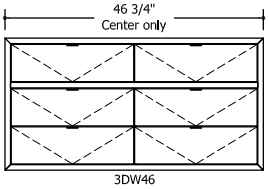

3DW46
(6 Drawers)

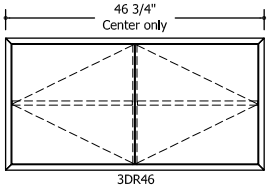

3DR46
(2 Doors w/2adj. shelf)

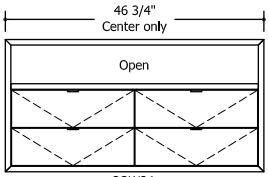

3OW24
(Open over 4 Drawers)

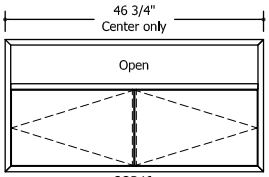

3OR46
(Open over Doors)

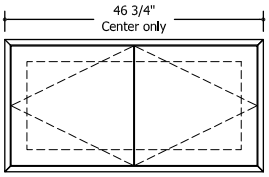

3AV46
(AV case, venting, Large wire access)

Highline Fifty Collection

Conference Tables
Overall Elevations and Clearance

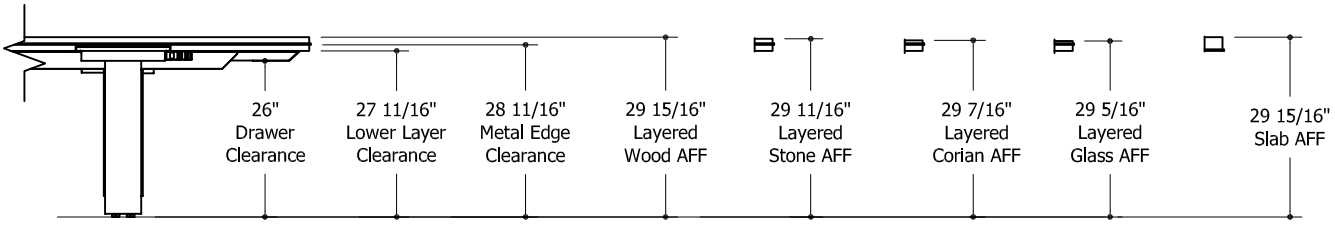

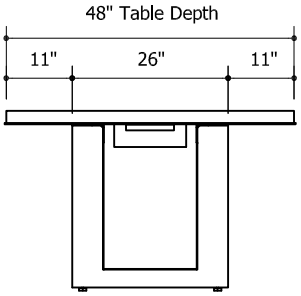

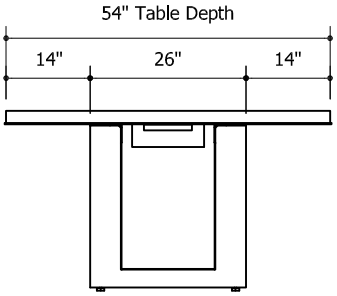

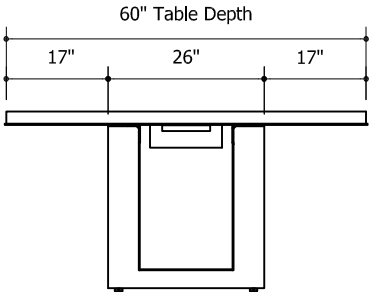

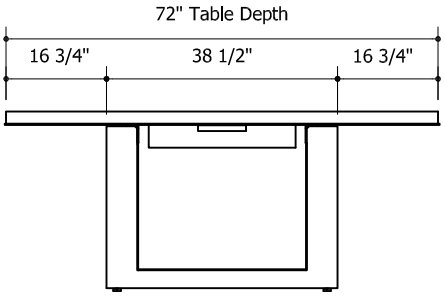

Highline Fifty Collection

Conference Tables
Top Construction

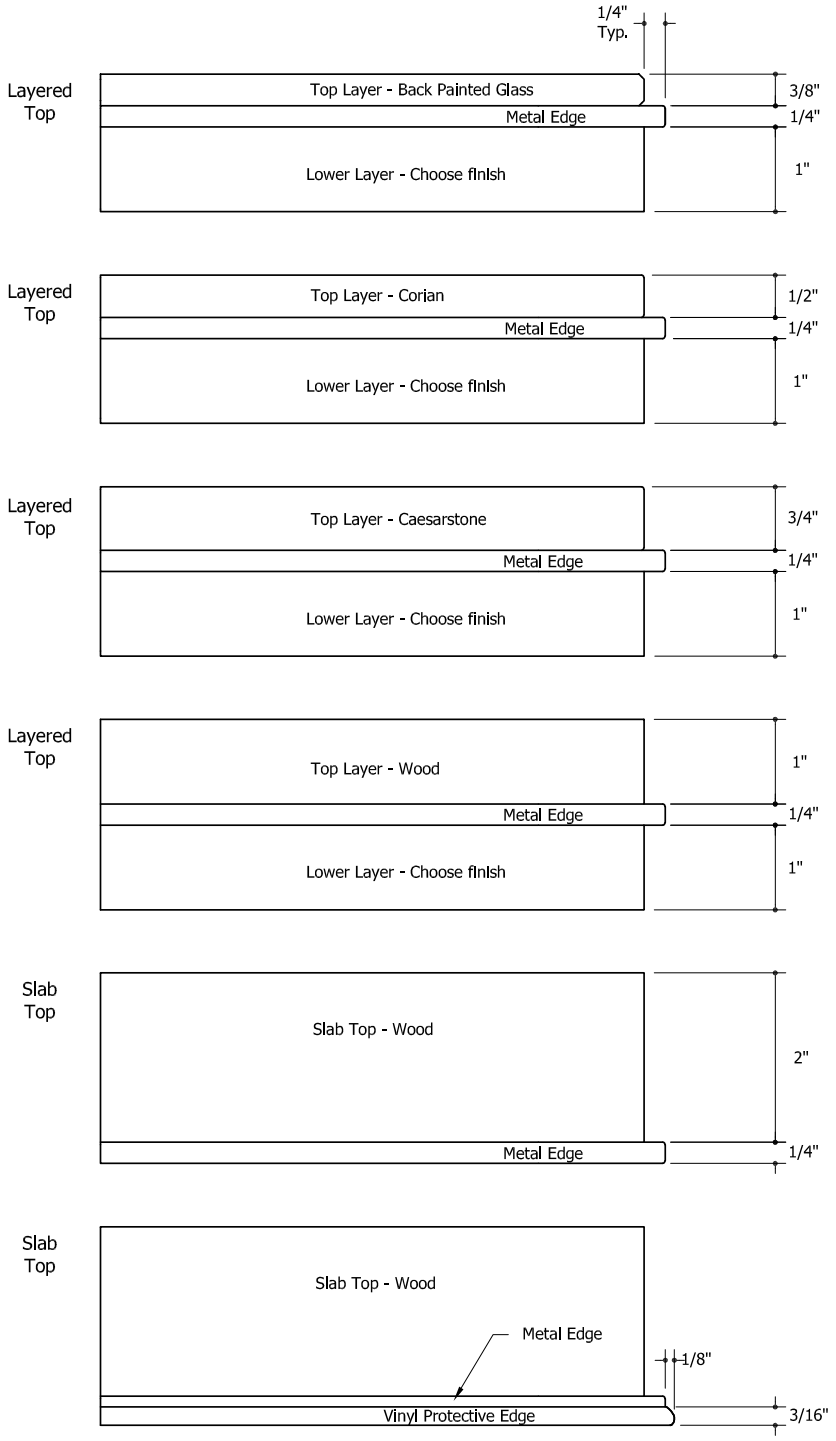

Highline Fifty Collection

Conference Tables
Base Construction

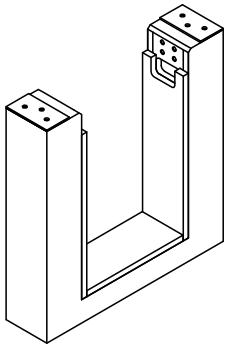

Small base : 42" / 48" / 54" / 60" Deep Tables
"ON" Open Base, no metal trim

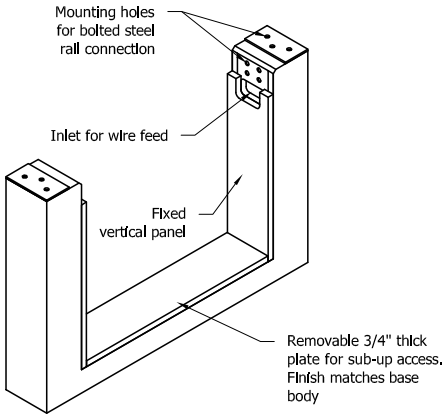

Large base : 72" Deep Tables
"ON" Open Base, no metal trim

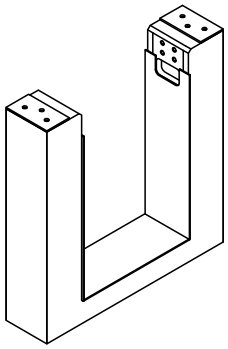

Small base : 42" / 48" / 54" / 60" Deep Tables
"OT" Open Base, with metal trim

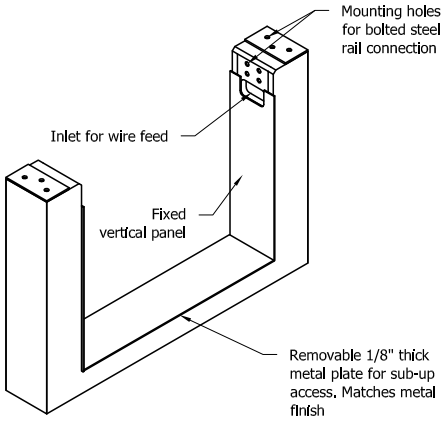

Large base : 72" Deep Tables
"OT" Open Base, with metal trim

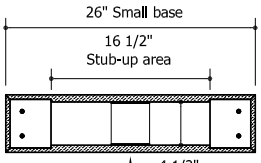

Horizontal section of Small Base

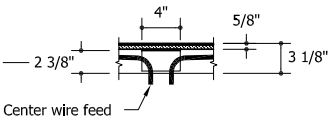

Vertical section at center of Base

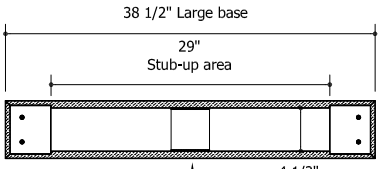

Horizontal section of Large base

Highline Fifty Collection

Conference Tables
Power & Connectivity
Drawers

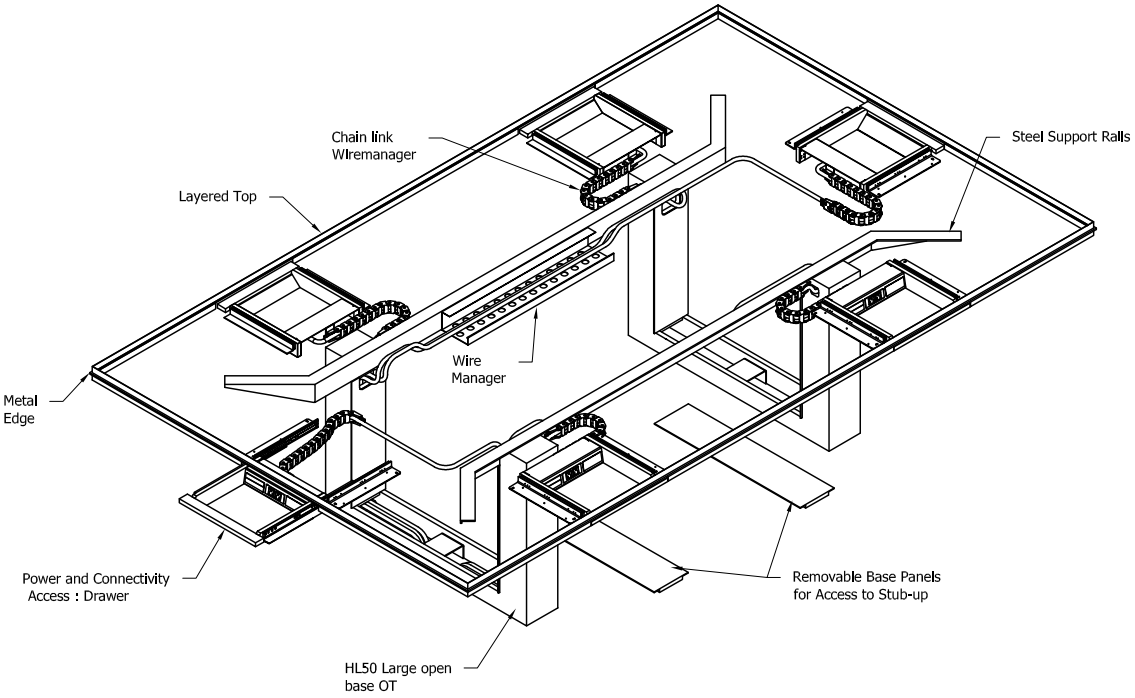

Drawer (shown populated)
- Interior: Black powder coat metallic finish (MC12)
- Provided with 1 AC power module - specify hardwired (HW) or plug in (PI), and 2 single space blank plates
- For additional connectivity, replace blank plates with Extron single or double space AAP plates as desired. For more information see **extron.com**

Highline Fifty Collection

Conference Tables
Power & Connectivity
Drawers

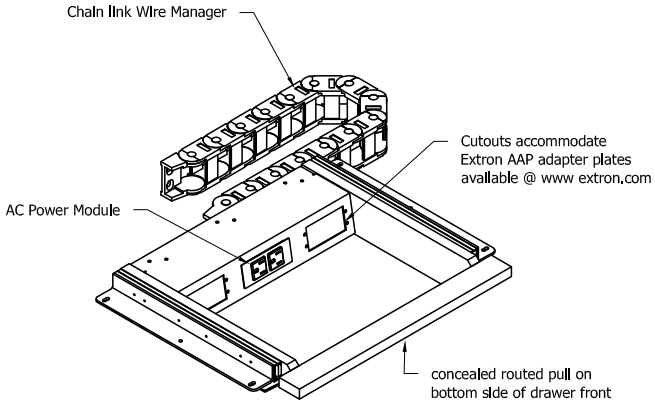

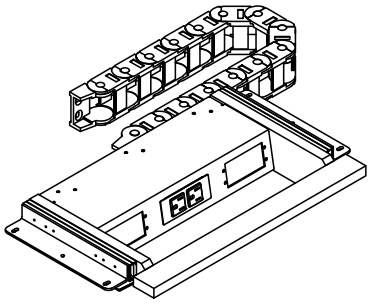

Large Drawer
- 6 1/2" deep x 12 3/4" wide flat storage with 2 1/2" interior height
- 3/8" gap above drawer for cord exit
- Concealed routed finger pull under front
- Used at table ends
- Used along the length of 60" / 72" deep tables
- Interior drawer finish: Black powder coat metallic (MC12)
- Drawer front matches lower layer finish
- Provided with 1 AC power module - specify hardwired (HW) or plug in (PI), and 2 single space blank plates

Small Drawer
- 1 7/8" deep x 12 3/4" wide flat storage with 2 1/2" interior height
- 3/8" gap above drawer for cord exit
- Concealed routed finger pull under front
- Used along the length of 48" / 54" deep tables
- Interior drawer finish: Black powder coat metallic (MC12)
- Drawer front matches lower layer finish
- Provided with 1 AC power module - specify hardwired (HW) or plug in (PI), and 2 single space blank plates

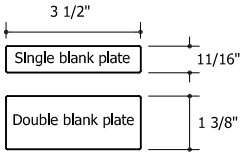

AC Module Hardwired (HW)
- 3/8" diameter x 6' long metal-clad cable with 6" pigtail
- Additional knockouts for series wiring
- 12A max per module

AC Module Plug In (PI)
- 7.5' detachable soft cord
- 6A max per module

Highline Fifty Collection

Conference Tables
Power & Connectivity
Table Top: Small and Large

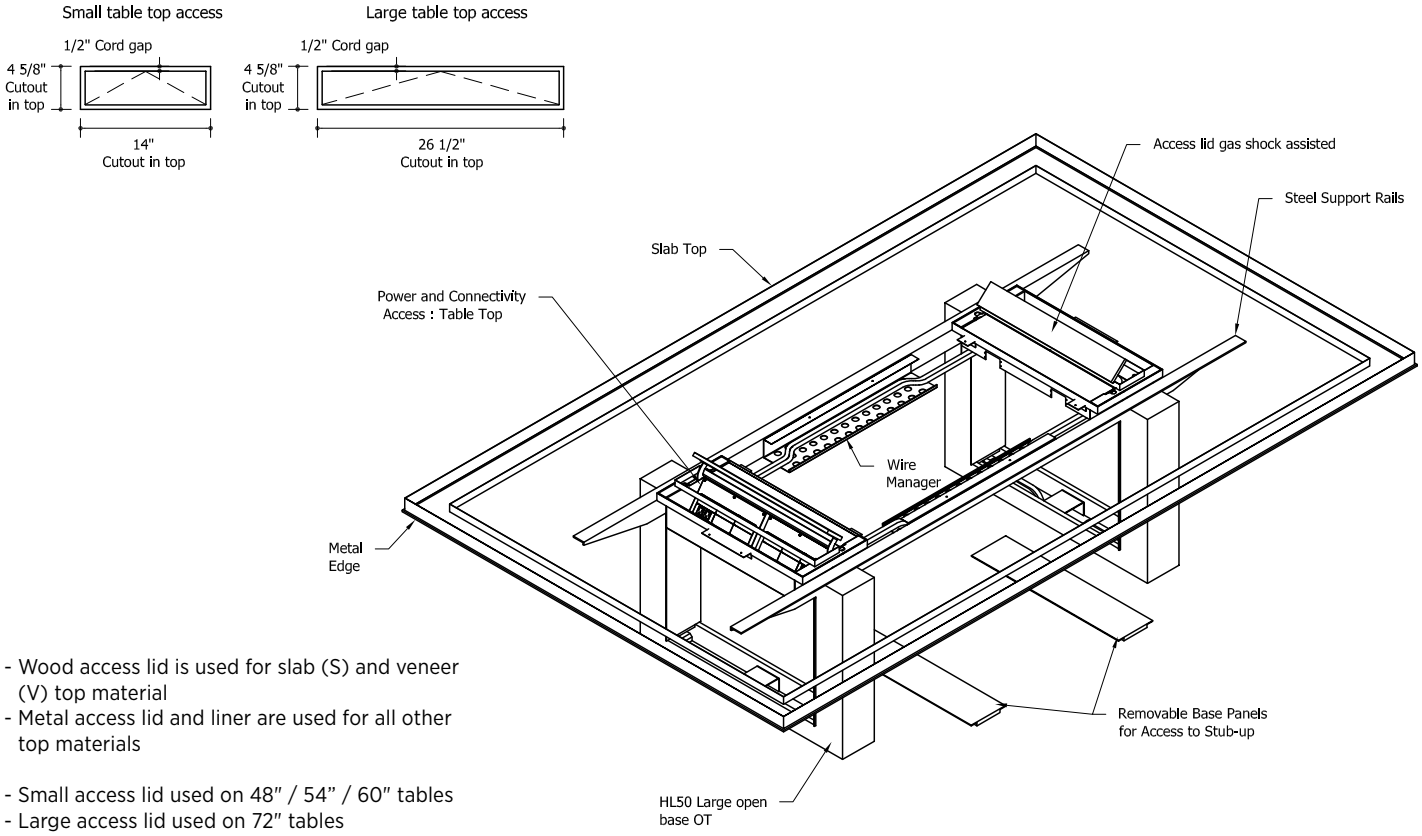

- Wood access lid is used for slab (S) and veneer (V) top material
- Metal access lid and liner are used for all other top materials

- Small access lid used on 48″ / 54” / 60″ tables
- Large access lid used on 72″ tables

Small Table Top access (shown populated)

Small Table Top access (shown with optional faceplate)

- Provided with 2 AC power modules - specify hardwired (HW) or plug in (PI), 3 double space and 2 single space blank plates
- For additional connectivity, replace blank plates with Extron single or double space AAP plates as desired. For more information see **extron.com**

Highline Fifty Collection

Conference Tables
Power & Connectivity
Table Top: Large

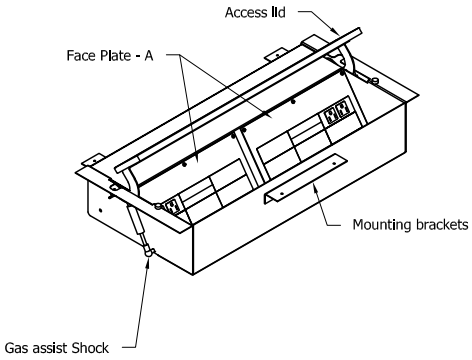

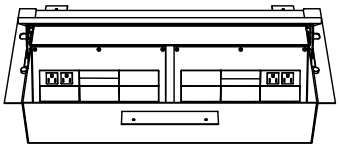

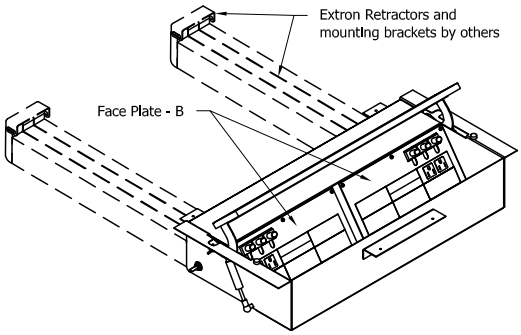

- Interior: Black powder coat metallic finish (MC12)
- Used on 48” / 54” / 60” width tables
- Connectivity: Face Plate "A" Qty 2 is standard
- Connectivity: Face Plate "B" Is used with Extron retractors
- Face Plates are removable to allow for easy population by AV installer
- Provided with 2 AC power modules - specify hardwired (HW) or plug in (PI), 8 double space and 4 single space blank plates
- For additional connectivity, replace blank plates with Extron single or double space AAP plates as desired. For more information see **extron.com**

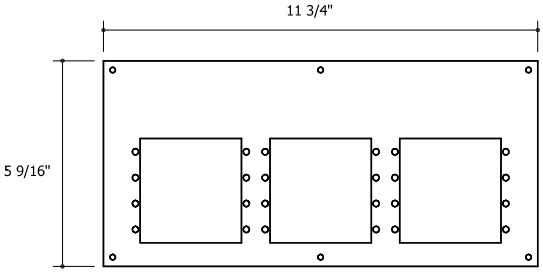

Connectivity Face Plate "A"

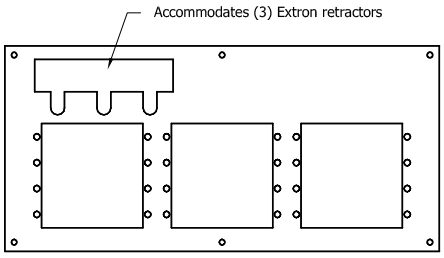

Optional Connectivity Face Plate "B"

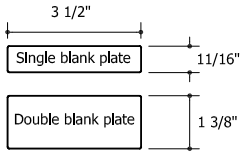

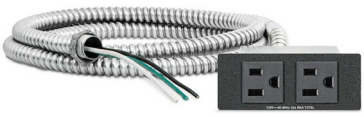

AC Module Hardwired (HW)
- 3/8” diameter x 6’ long metal-clad cable with 6” pigtail
- Additional knockouts for series wiring
- 12A max per module

AC Module Plug In (PI)
- 7.5’ detachable soft cord
- 6A max per module

Highline Fifty Collection

Conference Tables
Power & Connectivity
Table Top Small

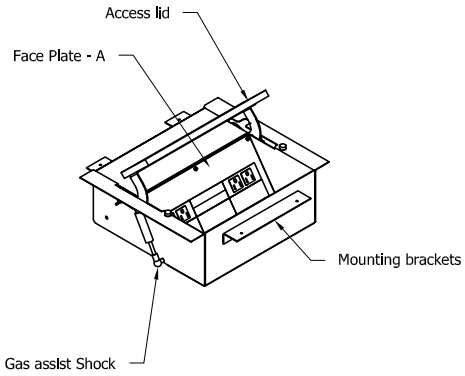

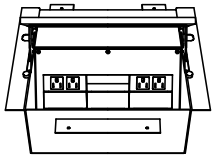

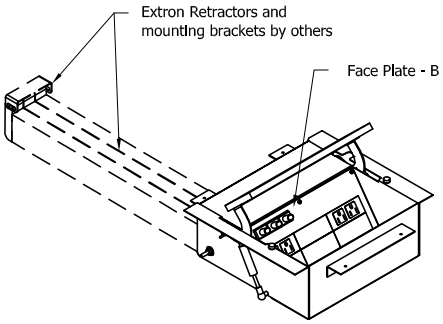

Table Top Access
- Interior: Black powder coat metallic finish (MC12)
- Used on 72” tables
- Connectivity: Face Plate "A" Qty 1 is standard
- Connectivity: Face Plate "B" Is used with Extron retractors
- Face Plates are removable to allow for easy population by AV installer
- Provided with 2 AC power modules - specify hardwired (HW) or plug in (PI), 4 double space and 2 single space blank plates
- For additional connectivity, replace blank plates with Extron single or double space AAP plates as desired. For more information see **extron.com**

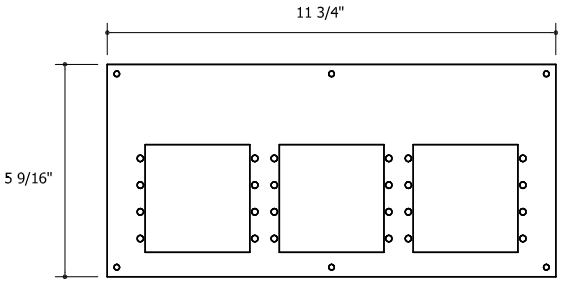

Connectivity Face Plate "A"

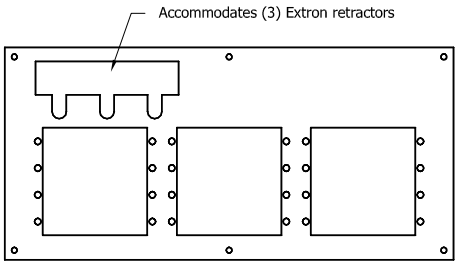

Optional Connectivity Face Plate "B"

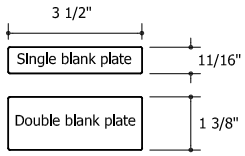

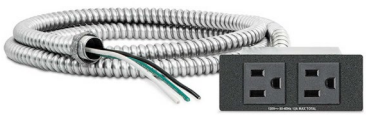

AC Module Hardwired (HW)
- 3/8” diameter x 6’ long metal-clad cable with 6” pigtail
- Additional knockouts for series wiring
- 12A max per module

AC Module Plug In (PI)
- 7.5’ detachable soft cord
- 6A max per module

Highline Fifty Collection

Conference Tables
Power & Connectivity
Undermount

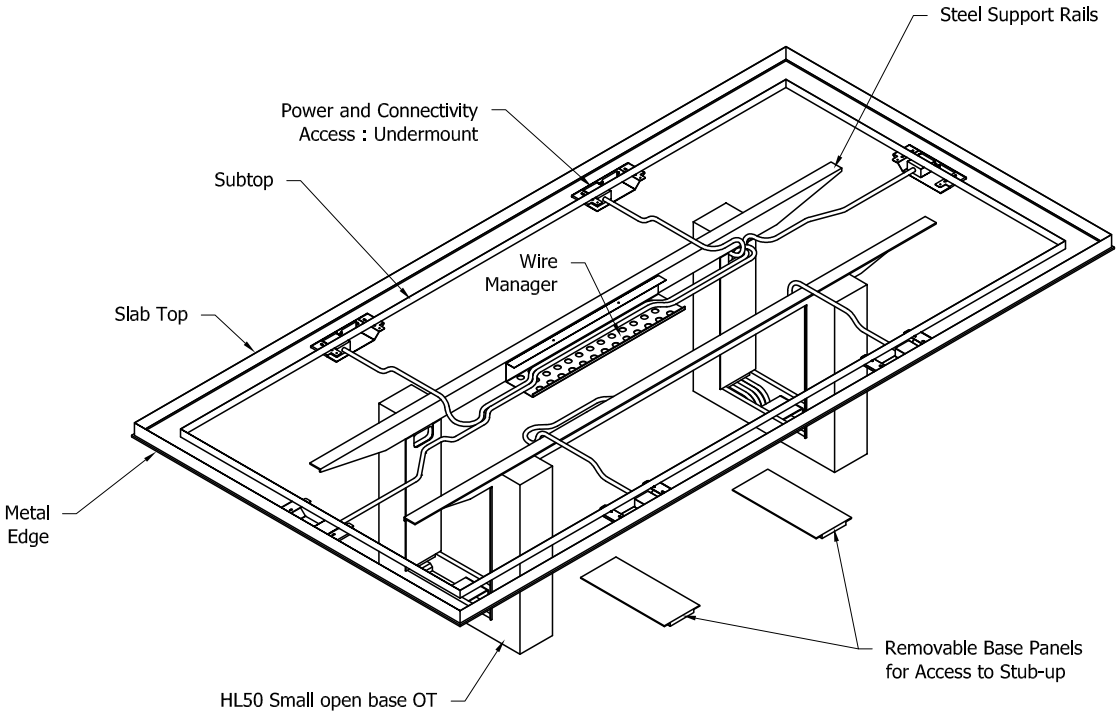

Undermount access (shown populated)
- Black powder coat metallic finish (MC12)
- Provided with 1 AC power module - specify hardwired (HW) or plug in (PI), and 2 single space blank plates
- For additional connectivity replace blank plates with Extron single or double space AAP plates as desired. For more information see **extron.com**

Highline Fifty Collection

Conference Tables
Power & Connectivity
Undermount

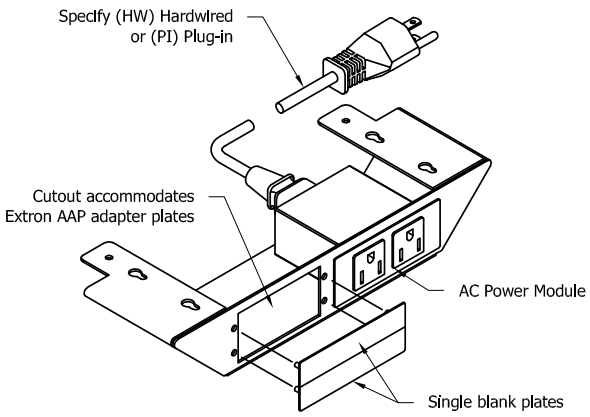

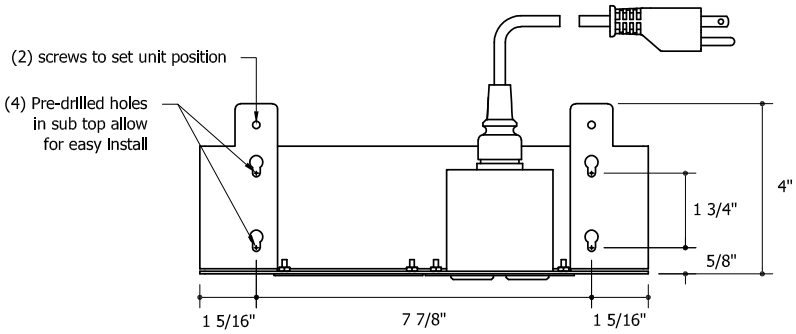

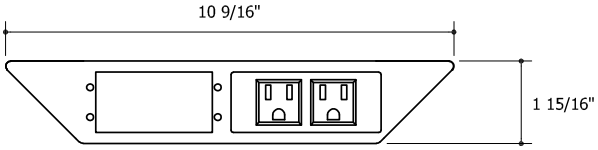

- Black powder coat metallic finish (MC12)
- Provided with 1 AC power module - specify hardwired (HW) or plug in (PI), and 2 single space blank plates
- For additional connectivity replace blank plates with Extron single or double space AAP plates as desired. For more information see **extron.com**

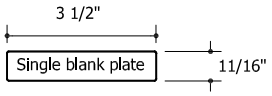

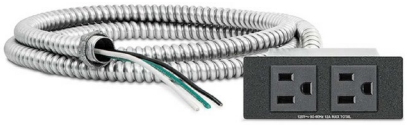

AC Module Hardwired (HW)
- 3/8” diameter x 6’ long metal clad cable with 6” pigtail
- Additional knockouts for series wiring
- 12A max per module

AC Module Plug In (PI)
- 7.5’ detachable soft cord
- 6A max per module

Highline Fifty Collection

Meeting Tables
Overall Elevations and Clearance

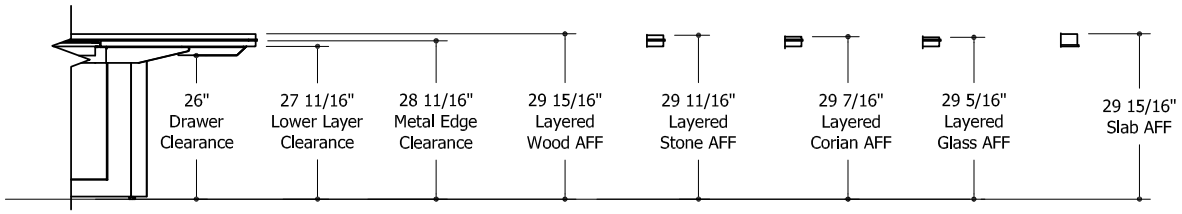

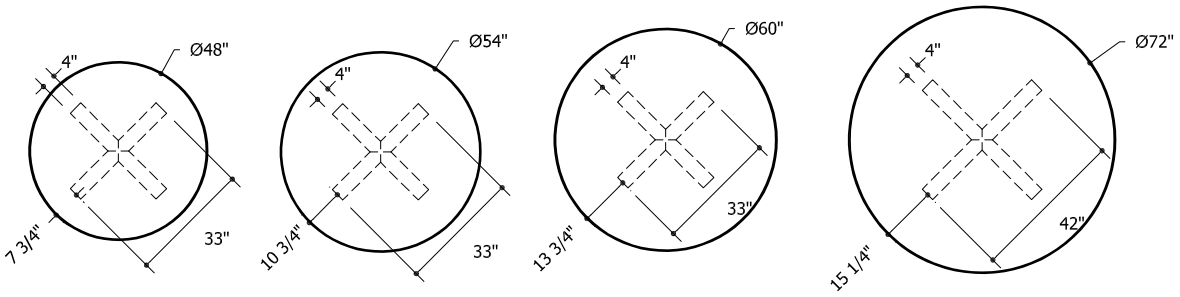

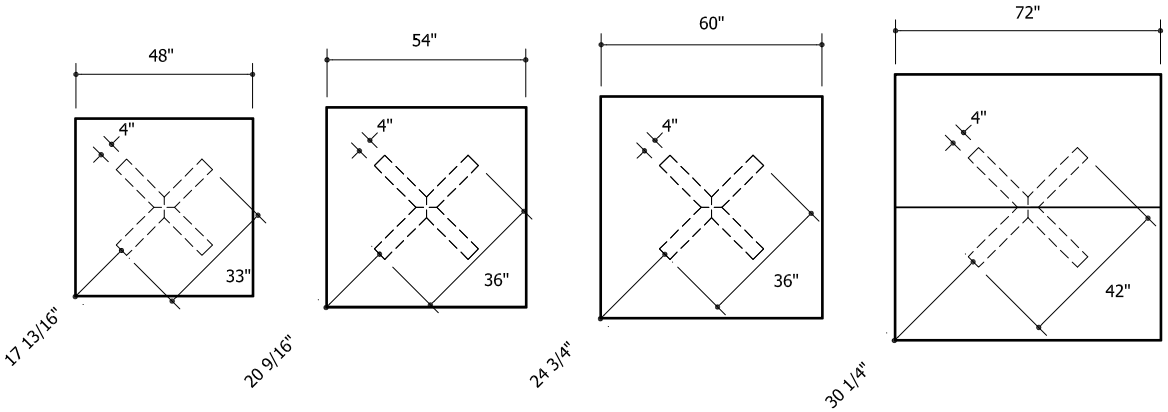

Highline Fifty Collection

Meeting Tables
Top Construction

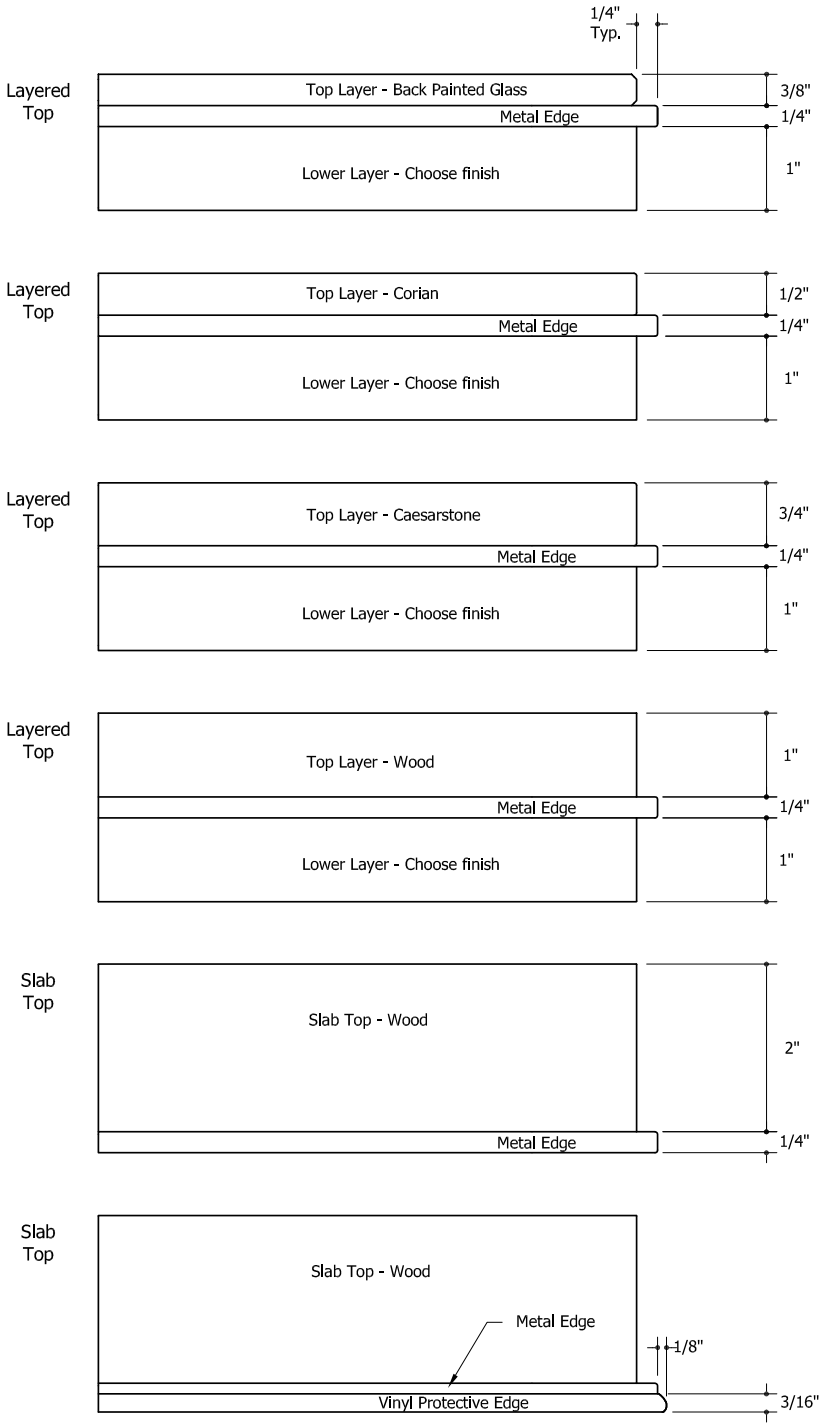

Highline Fifty Collection

Meeting Tables
Base Construction

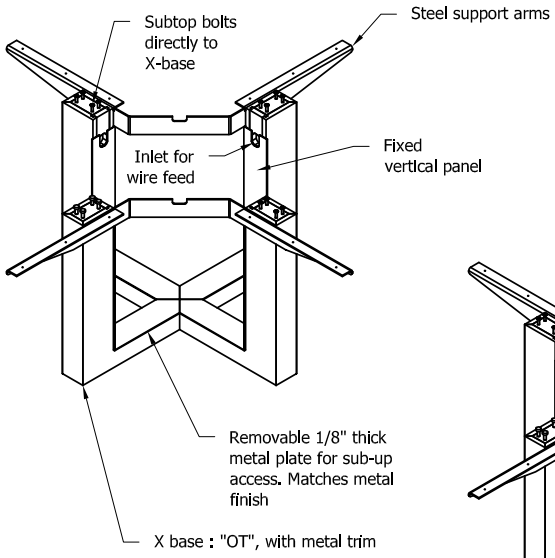

HL03 X base :
33" fits - 48" Round
- 48" Square
- 54" Round

36" fits - 54" Square
- 60" Round
- 60" Square

42" fits - 72" Round
- 72" Square

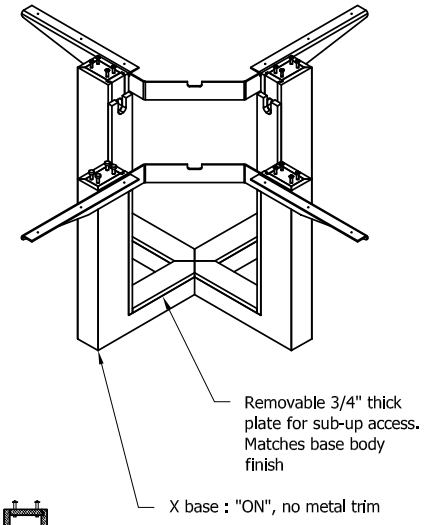

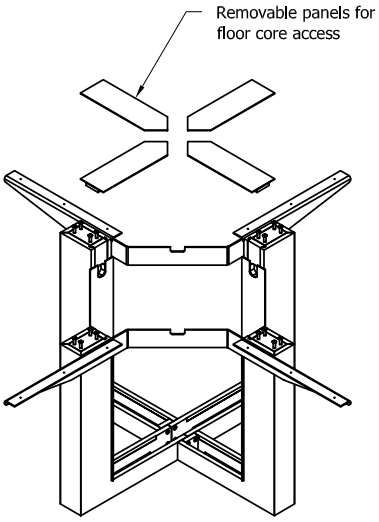

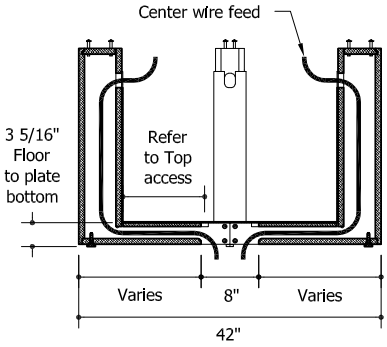

Vertical section at center of Base

Top access:
33" - 2 3/8" x 6 7/8"
36" - 2 3/8" x 8 3/8"
42" - 2 3/8" x 11 3/8"

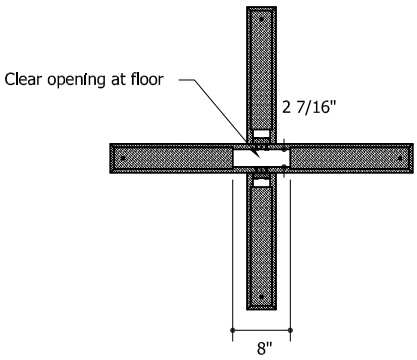

Horizontal section of typical base

Highline Fifty Collection

Meeting Tables
Power & Connectivity
Drawers

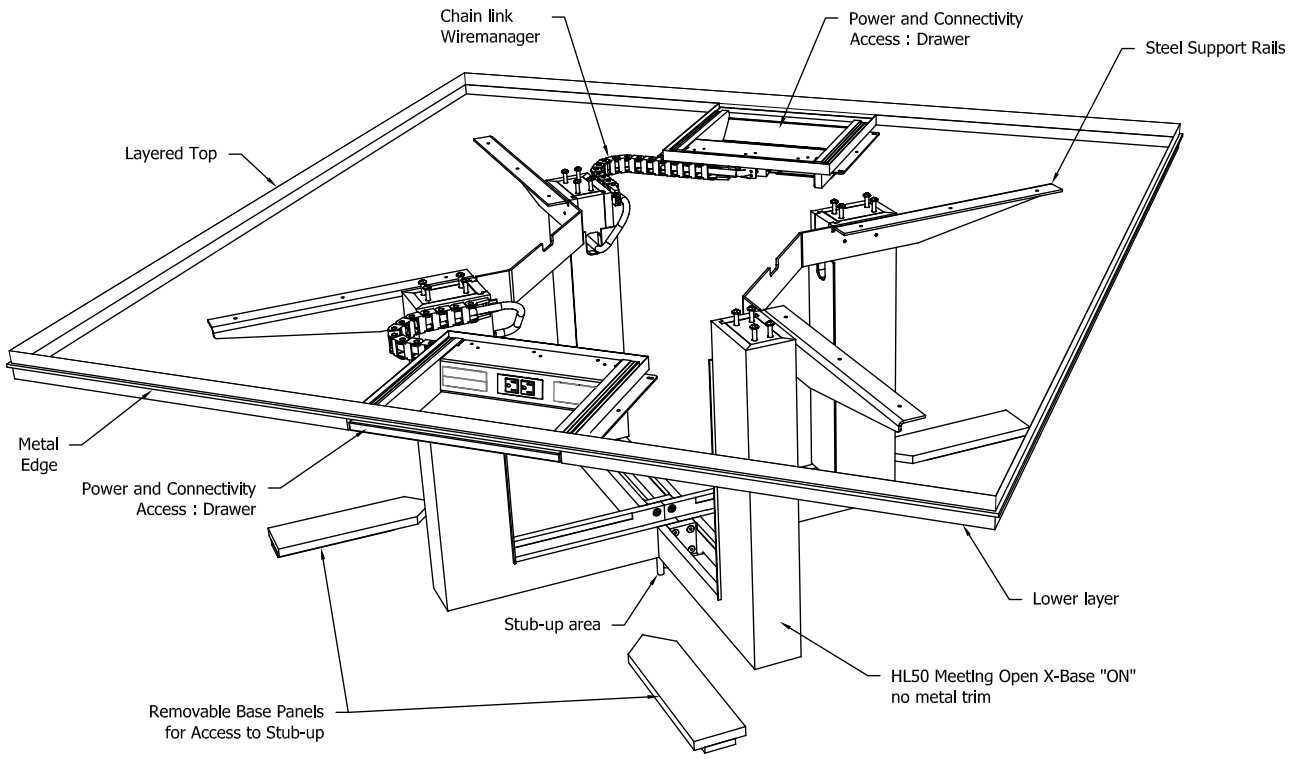

Drawer (shown populated)
- Black powder coat metallic finish (MC12)
- Provided with 1 AC power module - specify hardwired (HW) or plug in (PI), and 2 single space blank plates
- For additional connectivity replace blank plates with Extron single or double space AAP plates as desired. For more information see **extron.com**

Highline Fifty Collection

Meeting Tables
Power & Connectivity
Drawers

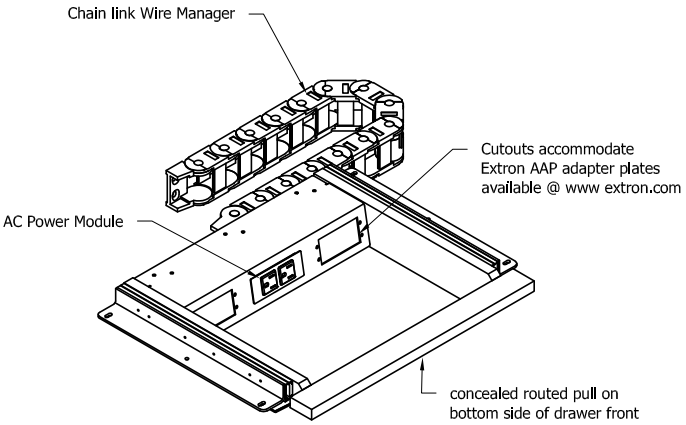

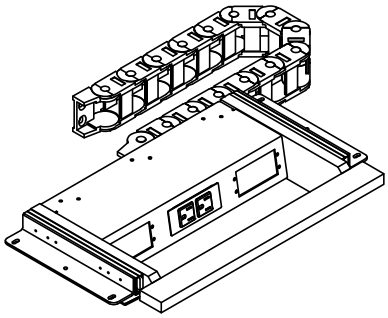

Large Drawer
- 6 1/2″ deep x 12 3/4″ wide flat storage with 2 1/2″ interior height
- 3/8″ gap above drawer tor cord exit.
- Concealed routed finger pull under front
- Used at table ends
- Used along the length of 60″ / 72″ deep tables
- Interior drawer finish: Black powder coat metallic (MC12)
- Drawer front matches lower layer finish
- Provided with 1 AC power module - specify hardwired (HW) or plug in (PI), and 2 single space blank plates

Small Drawer
- 1 7/8″ deep x 12 3/4″ wide flat storage with 2 1/2″ Interior height
- 3/8″ gap above drawer for cord exit
- Concealed routed finger pull under front
- Used along the length of 48″ / 54″ deep tables
- Interior drawer finish: Black powder coat metallic (MC12)
- Drawer front matches lower layer finish
- Provided with 1 AC power module - specify hardwired (HW) or plug in (PI), and 2 single space blank plates

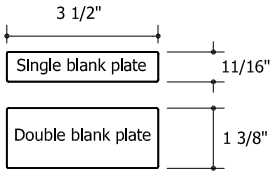

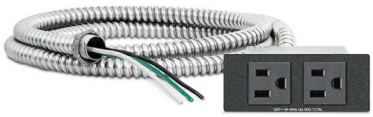

AC Module Hardwired (HW)
- 3/8” diameter x 6’ long metal clad cable with 6” pigtail
- Additional knockouts for series wiring
- 12A max per module

AC Module Plug In (PI)
- 7.5’ detachable soft cord
- 6A max per module

Highline Fifty Collection

Meeting Tables
Power & Connectivity
Table Top

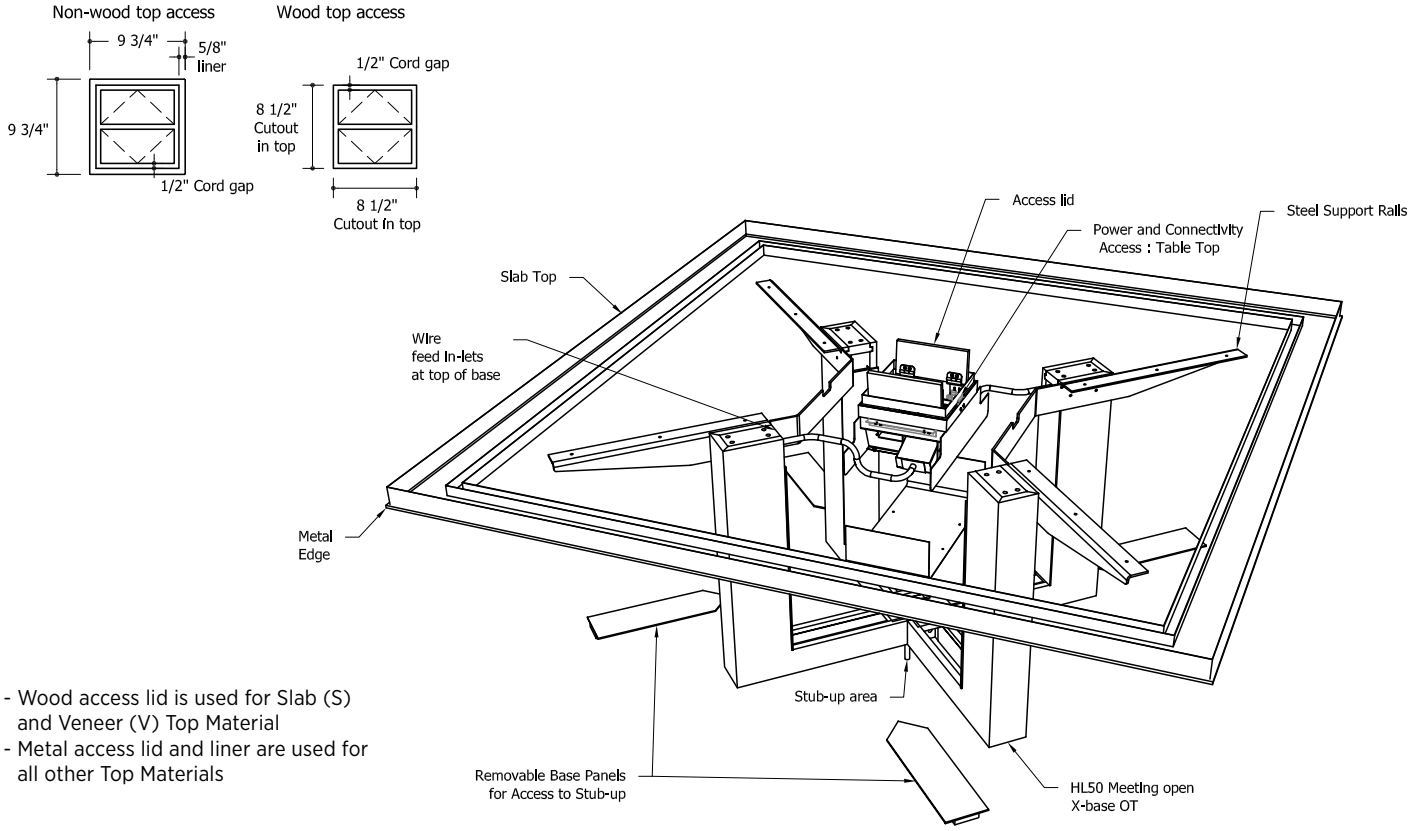

- Wood access lid is used for Slab (S) and Veneer (V) Top Material
- Metal access lid and liner are used for all other Top Materials

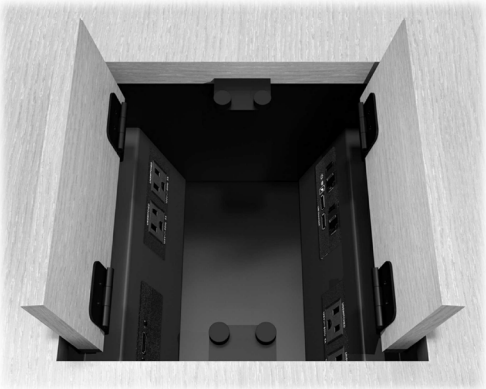

Meeting Table Top Access (shown populated)
- Provided with 2 AC power modules - specify hardwired (HW) or plug in (PI), 1 double and 2 single space blank plates
- For additional connectivity replace blank plates with Extron single or double space AAP plates as desired. For more information see **extron.com**

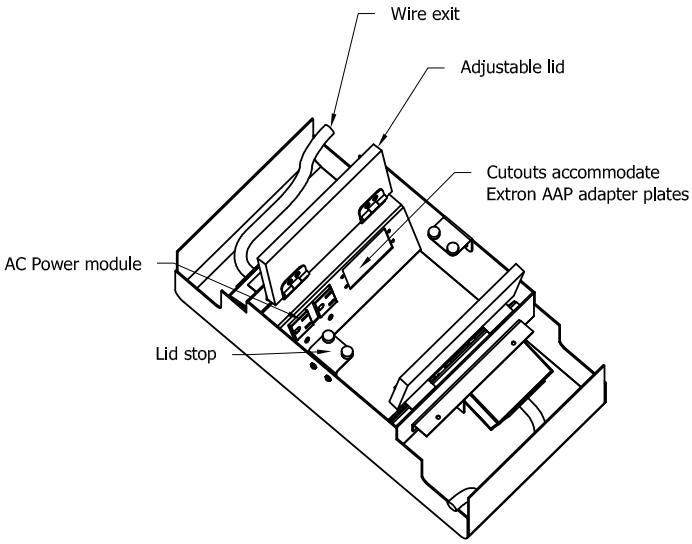

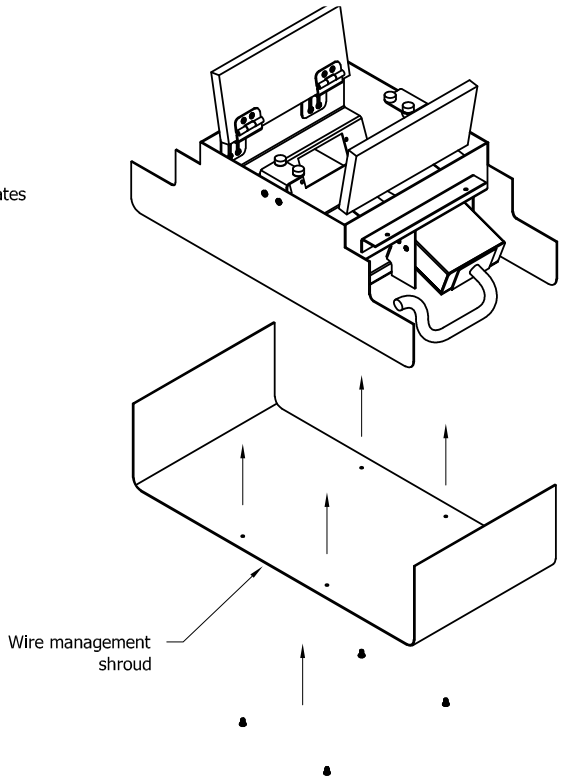

Meeting Table Top access
- Provided with 2 AC power modules-specify hardwired (HW) or plug in (PI), 1 double and 2 single space blank plates
- For additional connectivity replace blank plates with Extron single or double space AAP plates as desired. For more information see **extron.com**

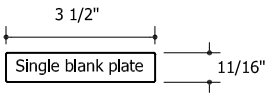

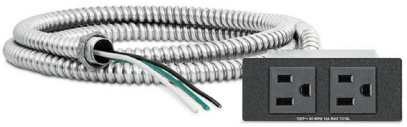

AC Module Hardwired (HW)
- 3/8” diameter x 6’ long metal clad cable with 6” pigtail
- Additional knockouts for series wiring
- 12A max per module

AC Module Plug In (PI)
- 7.5’ detachable soft cord
- 6A max per module

Highline Fifty Collection

Meeting Tables
Power & Connectivity
Undermount

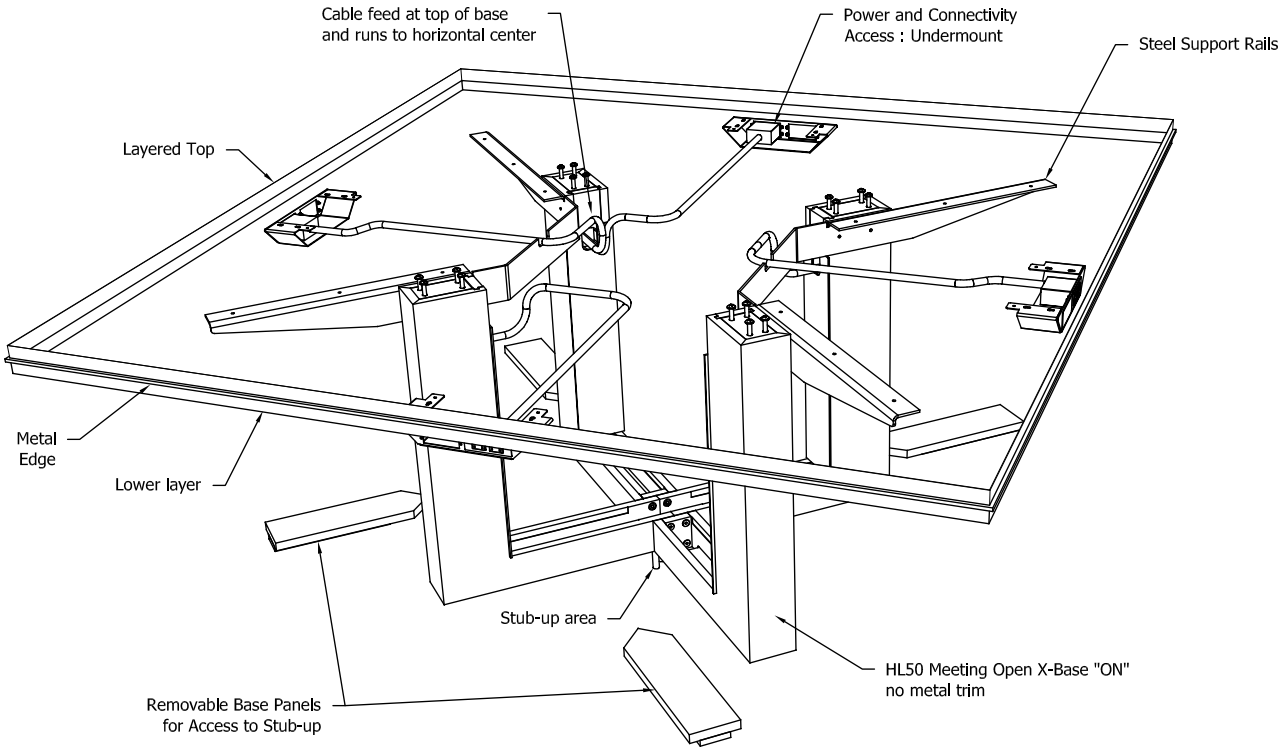

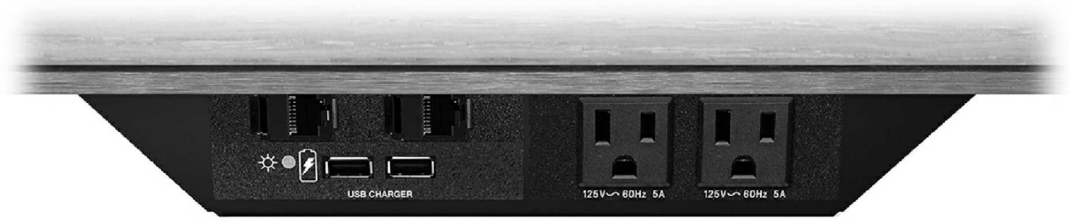

Undermount access (shown populated)
- Black powder coat metallic finish (MC12)
- Provided with 1 AC power module - specify hardwired (HW) or plug in (PI), and 2 single space blank plates
- For additional connectivity replace blank plates with Extron single or double space AAP plates as desired. For more information see **extron.com**

Highline Fifty Collection

Meeting Tables
Power & Connectivity
Undermount

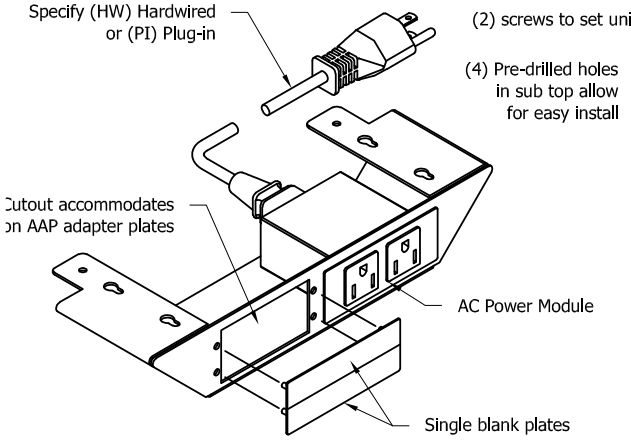

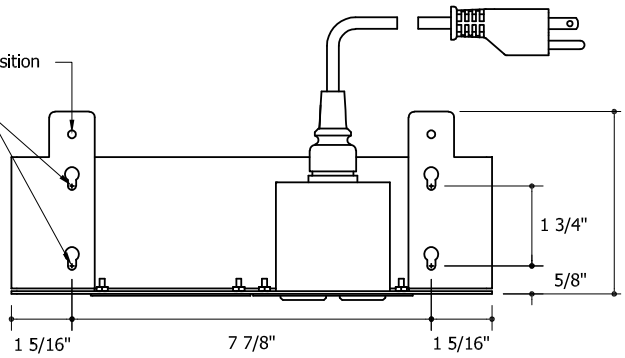

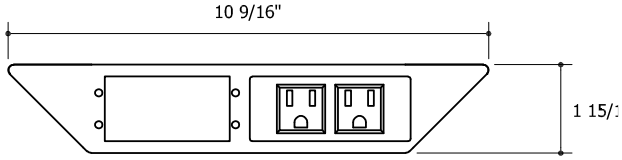

- Black powder coat metallic finish (MC12)
- Provided with 1 AC power module - specify hardwired (HW) or plug in (PI), and 2 single space blank plates
- For additional connectivity replace blank plates with Extron single or double space AAP plates as desired. For more information see **extron.com**

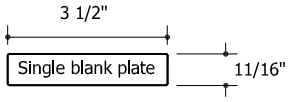

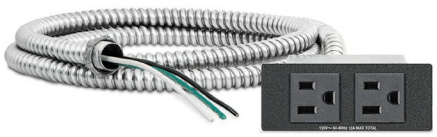

AC Module Hardwired (HW)
- 3/8" diameter x 6' long metal clad cable with 6" pigtail
- Additional knockouts for series wiring
- 12A max per module

AC Module Plug In (PI)
- 7.5' detachable soft cord
- 6A max per module

Highline Fifty Collection

Credenzas
Elevations and Optional Tops

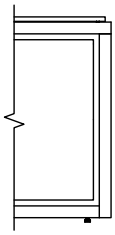

Optional Top
3/4" Caesarstone

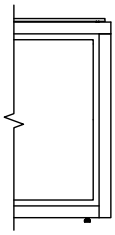

Optional Top
1/2" Corlan

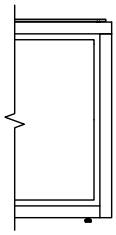

Optional Top
3/8" Glass

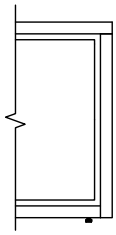

Optional Top
None

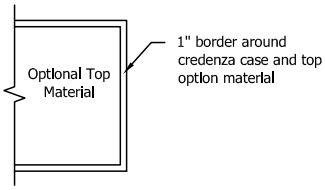

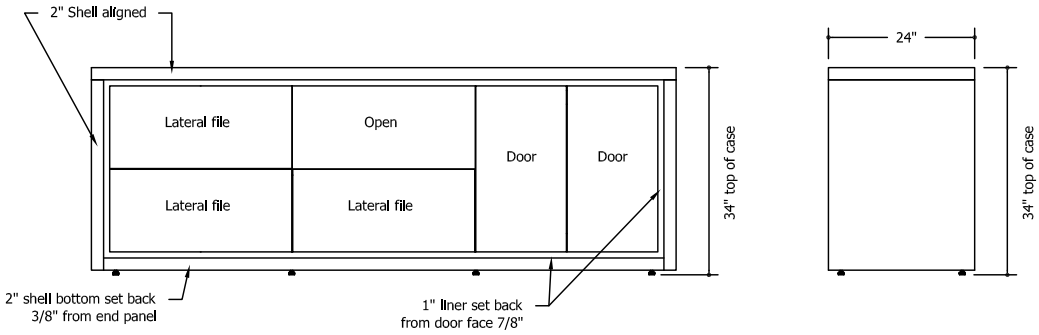

Buffet Height Credenza

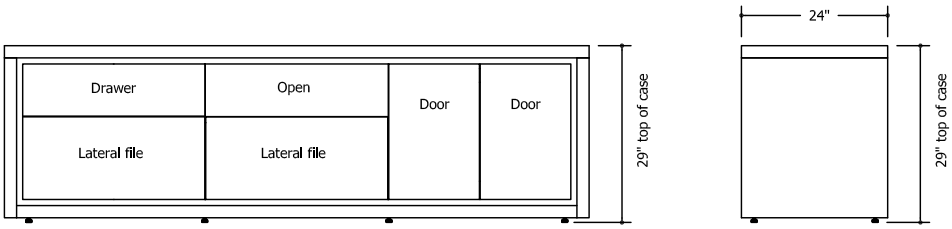

Conference Height Credenza

Highline Fifty Collection

Credenzas
Case Details

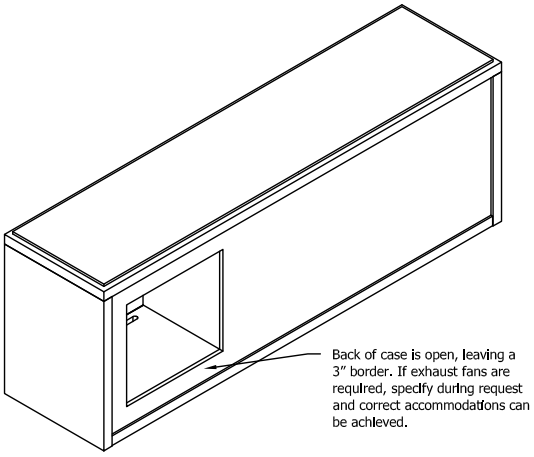

Back of Credenza

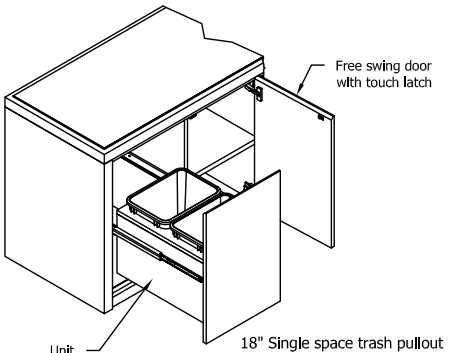

18" Single space trash pullout
- (2) 8.75 gallon receptacles
- Front to back orientation
- Containers are black plastic

36" Double space trash pullout
-(4) 8.75 gallon receptacles
-Front to back orientation
-Containers are black plastic

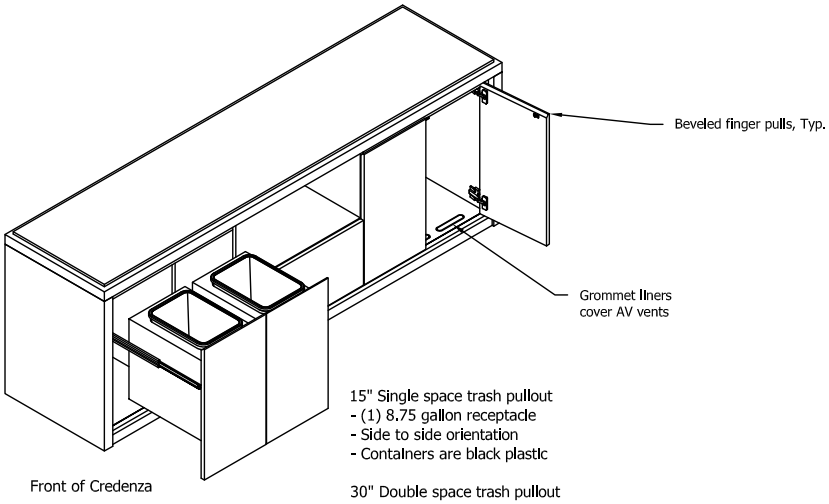

Front of Credenza

15" Single space trash pullout
- (1) 8.75 gallon receptacle
- Side to side orientation
- Containers are black plastic

30" Double space trash pullout
- (2) 8.75 gallon receptacles
- Side to side orientation
- Containers are black plastic

Credenza Notes
- Pulls are 45 degrees inside bevel
- All drawers have a beveled pull on back edge of each front
- Top drawer has bevel on top edge, bottom drawer has bevel at bottom edge
- All drawers are equipped with full extension slides
- All doors are equipped with self-closing hinges
- All credenza top material options are secured to the case with silicone except full clear glass (FG GC00)
- Full clear glass (FG GC00) sets on top of 1/16" bumpers located on top of case
- Trash option is pull-out only

Audio Visual Requirements:
- Coordinate AV requirements with the interior clearance dimensions provided below to ensure fit. All AV cases have air vent grommet at the bottom front and an open back w3" border. Consult with your AV contractor for specific component requirements. Custom solutions are available on request

- Conference height 30" Bay:
  25.75" width x 19" depth x 21.5" height
- Buffet height 30" Bay:
  25.75" width x 19" depth x 26.5" height

- Conference height 36" Bay:
  31.75" width x 19" depth x 21.5" height
- Buffet height 36" bay:
  31.75" width x 19" depth x 26.5" height

Highline Fifty Collection

Credenzas
Conference Height: 29″
Configurations: 15″ and 30″ modules

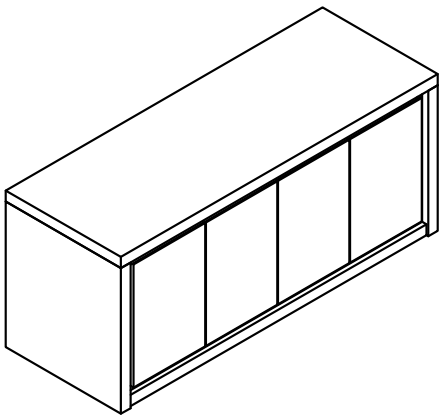

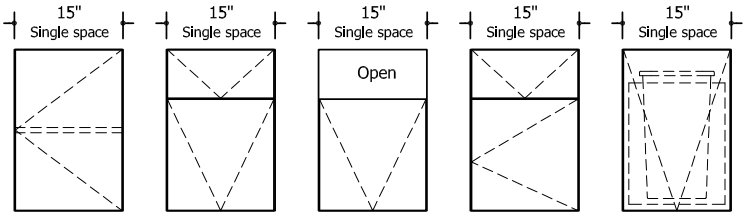

DR15C
(Door w/adj. shelf)

DF15C
(1 Drawer over 1 file)

OF15C
(Open over 1 File)

DD15C
(1 Drawer over 1 Door)

TP15C
(Pullout trash
1 receptacle)

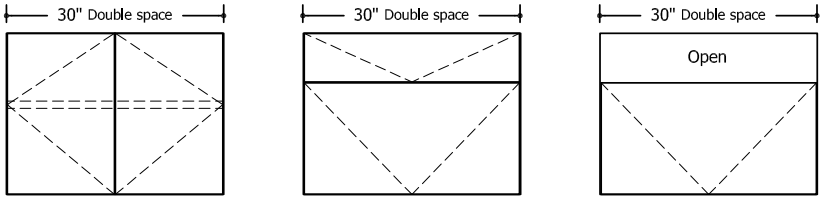

DR30C
(2 Doors w/adj. shelf)

DF30C
(1 Drawer over 1 Lateral file)

OF30C
(Open over 1 Lateral file)

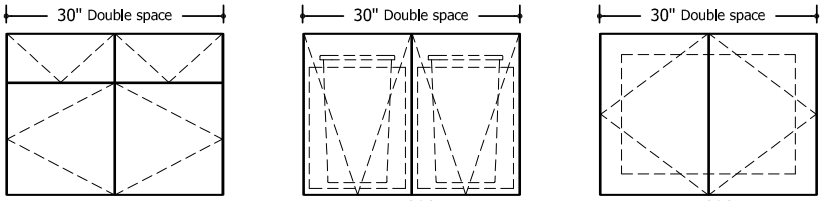

DD30C
(2 Drawers over 2 Doors)

TP30C
(Double pullout trash 2 receptacles)

AV30C
(2 Doors, AV venting large wire access)

Highline Fifty Collection

Credenzas
Buffet Height: 34″
Configurations: 15″ and 30″ modules

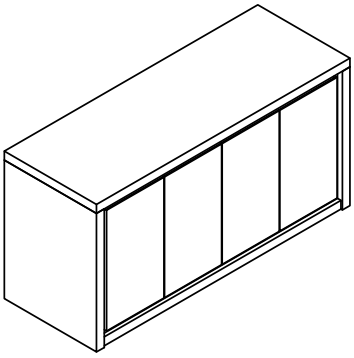

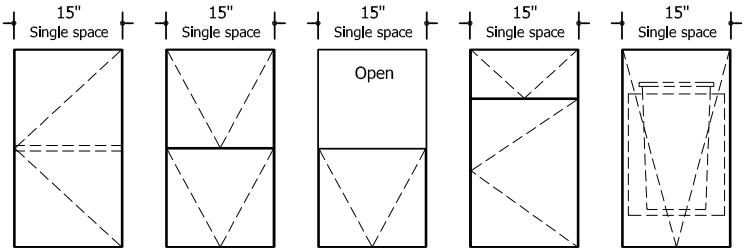

DR15B (Door w/adj. shelf) | FF15B (1 Drawer over 1 file) | OF15B (Open over 1 File) | DD15B (1 Drawer over 1 Door) | TP15B (Pullout trash 1 receptacle)

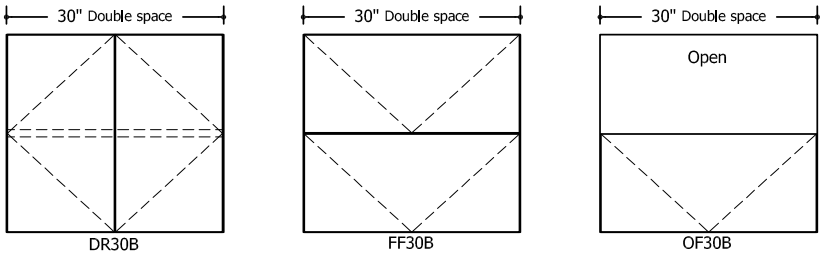

DR30B (2 Doors w/adj. shelf) | FF30B (1 Lateral over 1 Lateral file) | OF30B (Open over 1 Lateral file)

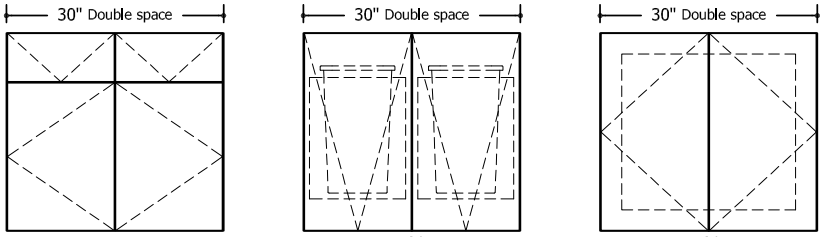

DD30B (2 Drawers over 2 Doors) | TP30B (Double pullout trash 2 receptacles) | AV30B (2 Doors, AV venting large wire access)

Highline Fifty Collection

Credenzas
Conference Height: 29″
Configurations: 18″ and 36″ modules

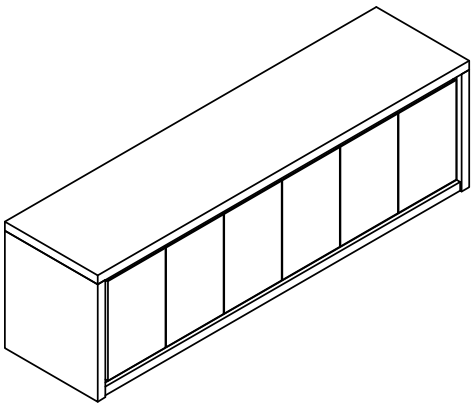

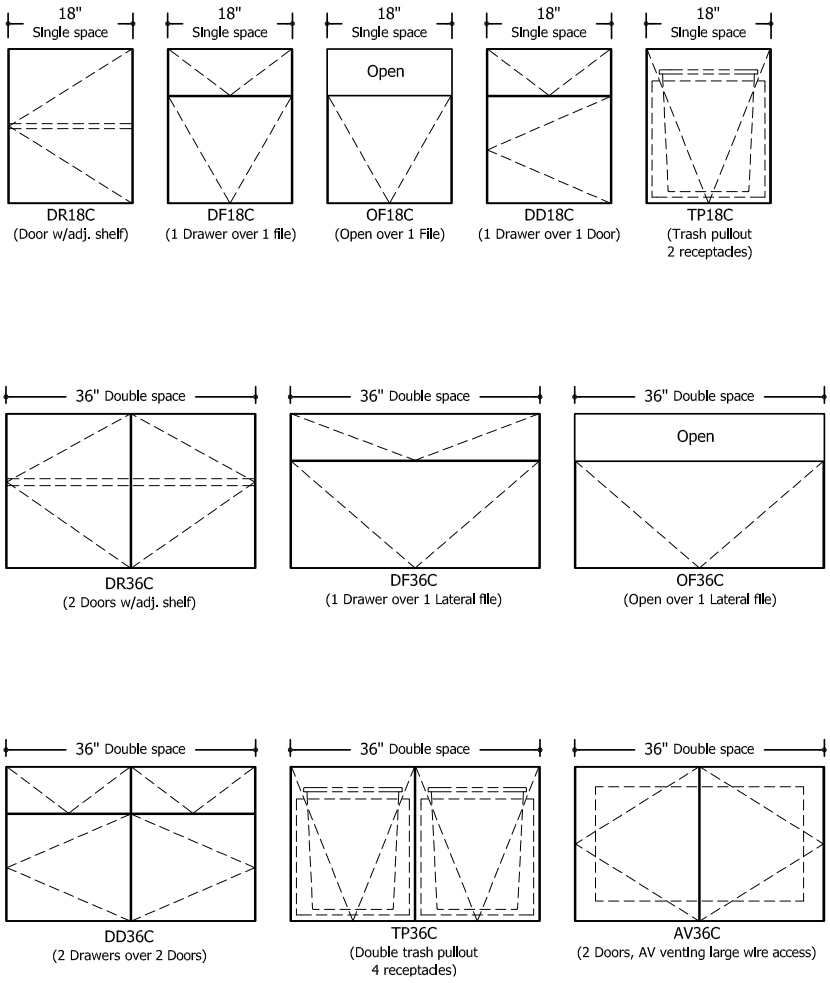

Highline Fifty Collection

Credenzas
Buffet Height: 34″
Configurations: 18″ and 36″ modules

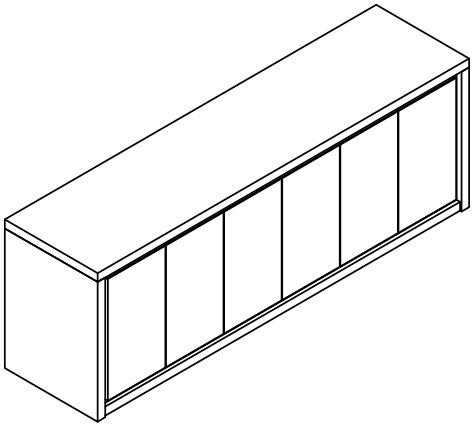

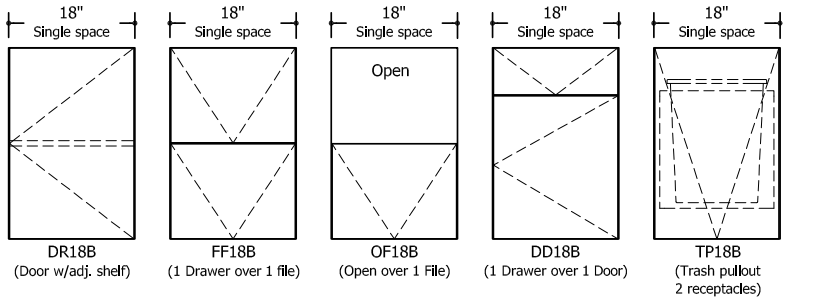

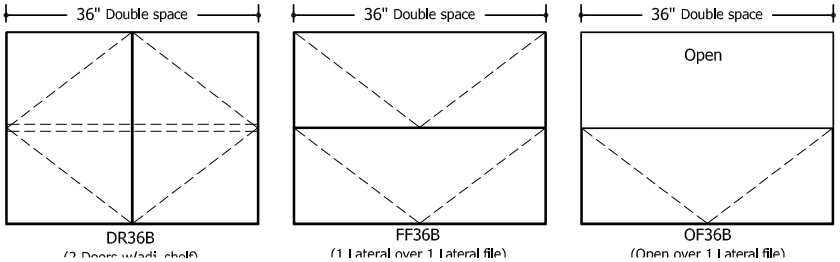

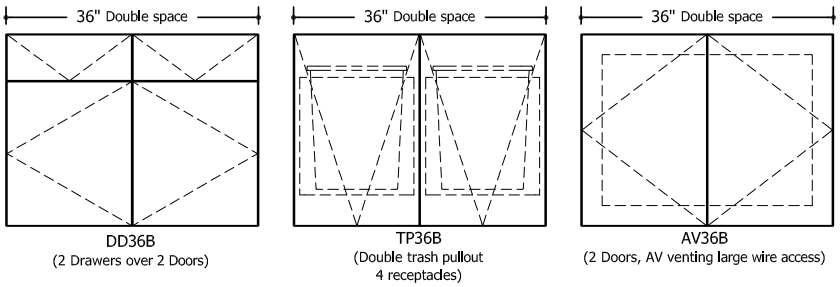

Highline Twenty-Five Collection

Credenzas
Elevations and Optional Tops

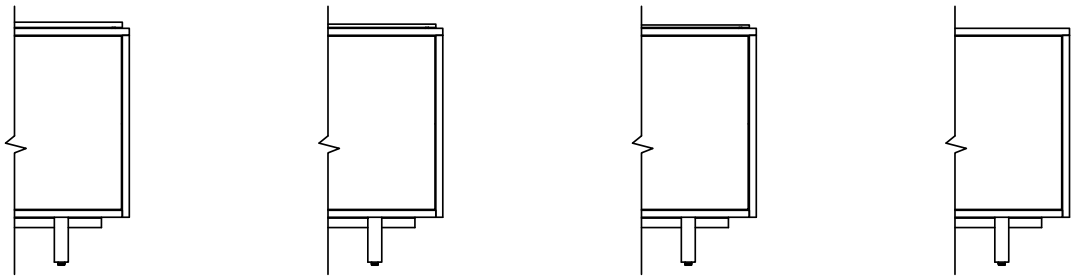

Optional Top
3/4" Caesarstone

Optional Top
1/2" Corian

Optional Top
3/8" Glass

Optional Top
None

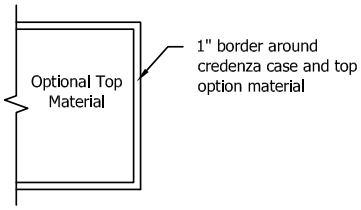

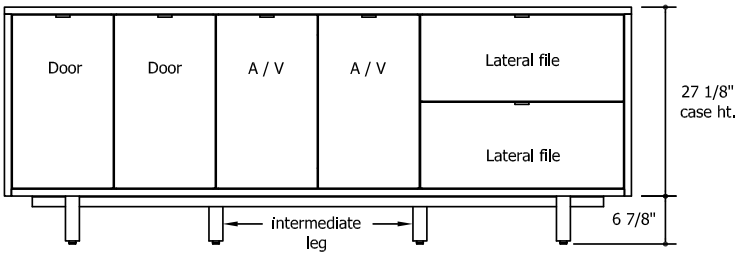

Buffet Height Credenza

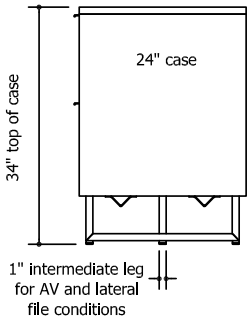

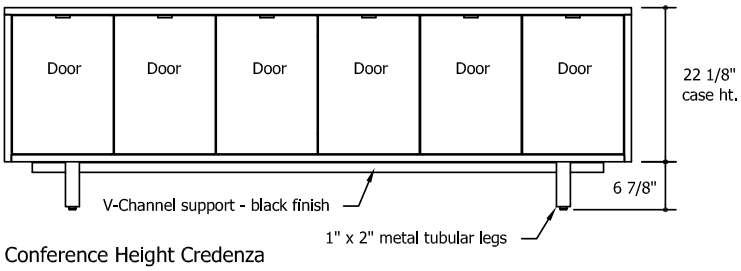

Conference Height Credenza

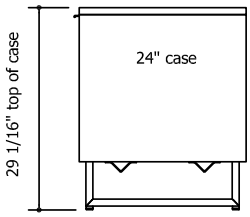

Highline Twenty-Five Collection

Credenza
Case Details

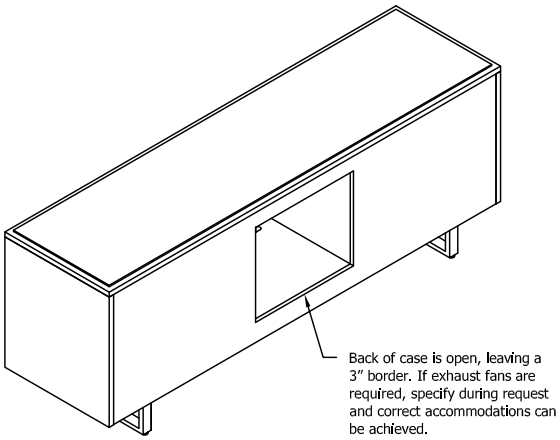

Back of Credenza

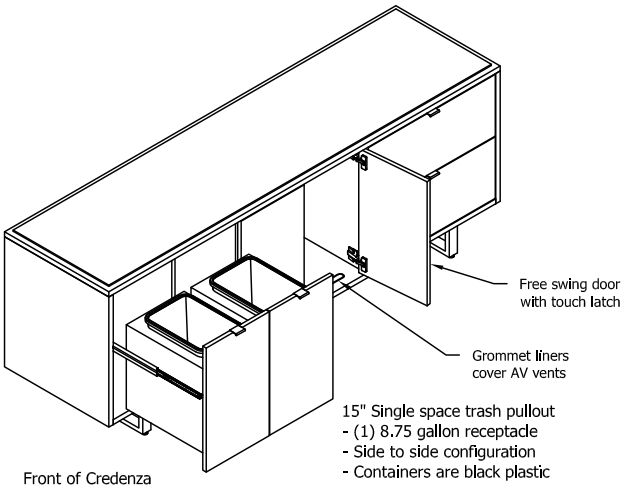

Front of Credenza

15" Single space trash pullout
- (1) 8.75 gallon receptacle
- Side to side configuration
- Containers are black plastic

30" Double space trash pullout
- (2) 8.75 gallon receptacles
- Side to side configuration
- Containers are black plastic

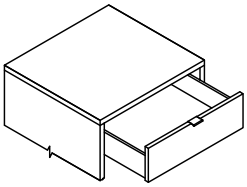

Drawer with 2" tab pull

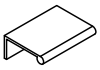

2" tab pull

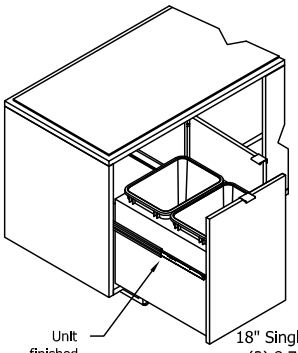

18" Single space trash pullout
- (2) 8.75 gallon receptacles
- Front to back orientation
- Containers are black plastic

36" Double space trash pullout
- (4) 8.75 gallon receptacles
- Front to back orientation
- Containers are black plastic

Credenza Notes:
- 2" metal pulls to compliment metal legs
- All drawers have a 2" tab pull that Is located in the center of the top edge of each front
- All drawers use full extension slides
- All doors use free swing hinges and touch latches.
- All credenza top material options are secured to the case with silicone except full clear glass (FG GC00)
- Full clear glass (FG CG00) sets on top of 1/16" bumpers located on top of case
- Trash option is pull-out only

Audio Visual Requirements:
- Coordinate AV requirements with the interior clearance dimensions provided below to ensure fit. All AV cases have air vent grommet at the bottom front and an open back width 3" border. Consult with your AV contractor for specific component requirements. Custom solutions are available on request

- Conference height 30" Bay:
  25.15" width x 21.25" depth x 19.18" height

- Buffet height 30" Bay:
  25.15" width x 21.25" depth x 24.18" height

- Conference height 36" Bay:
  31.13" width x 21.25"depth x 19.18" height

- Buffet height 36" Bay:
  31.13" width x 21.25" depth x 24.18" height

Highline Twenty-Five Collection

Credenzas
Conference Height: 29″
Configurations: 15″ and 30″ modules

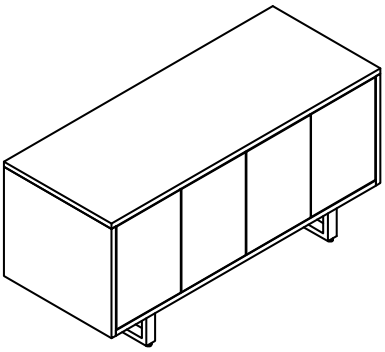

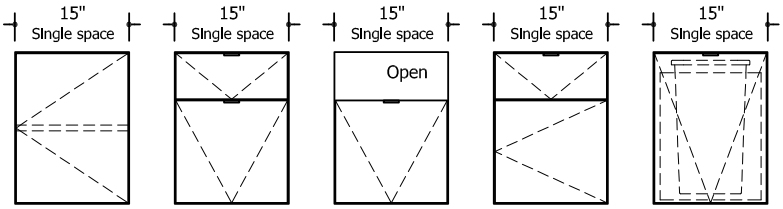

DR15C
(Door w/adj. shelf)

DF15C
(1 Drawer over 1 file)

OF15C
(Open over 1 File)

DD15C
(1 Drawer over 1 Door)

TP15C
(Trash pullout
1 receptacle)

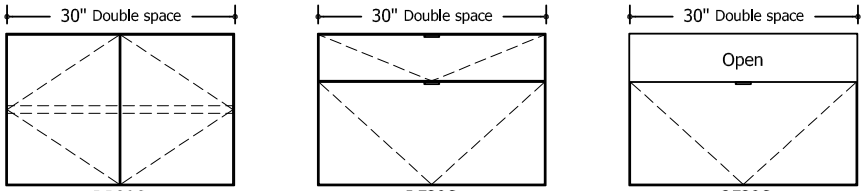

DR30C
(2 Doors w/adj. shelf)

DF30C
(1 Drawer over 1 Lateral file)

OF30C
(Open over 1 Lateral file)

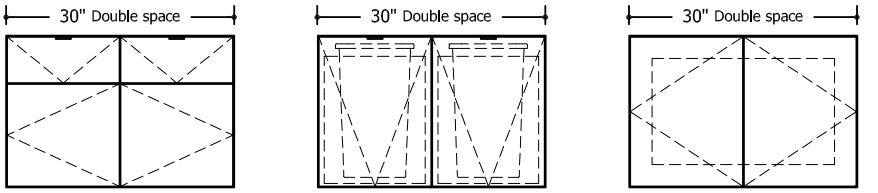

DD30C
(2 Drawers over 2 Doors)

TP30C
(Double trash pullout
2 receptacles)

AV30C
(2 Doors, AV venting large wire access)

Highline Twenty-Five Collection

Credenzas
Buffet Height: 15″
Configurations: 15″ + 30″ models

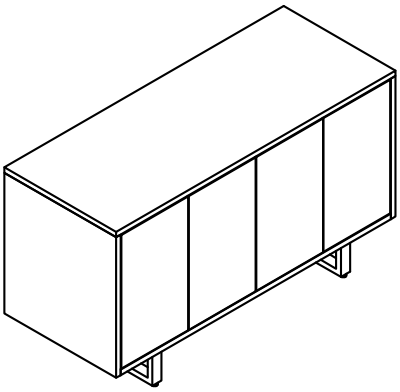

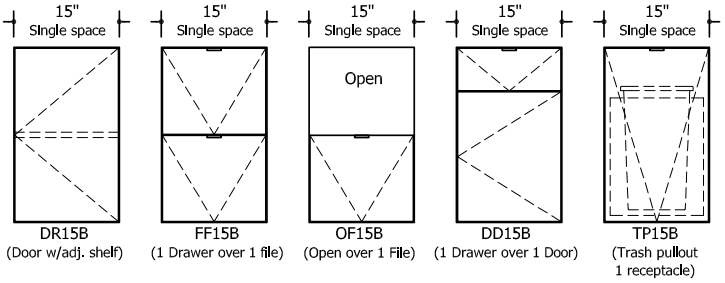

DR15B
(Door w/adj. shelf)

FF15B
(1 Drawer over 1 file)

OF15B
(Open over 1 File)

DD15B
(1 Drawer over 1 Door)

TP15B
(Trash pullout
1 receptacle)

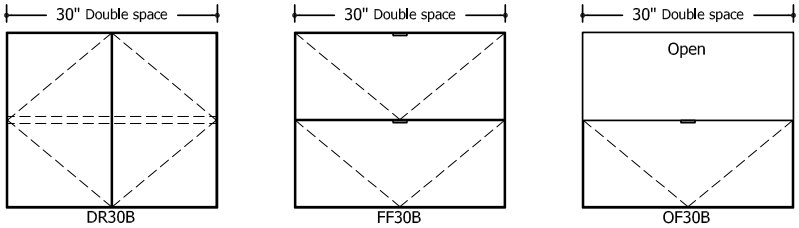

DR30B
(2 Doors w/adj. shelf)

FF30B
(1 Lateral over 1 Lateral file)

OF30B
(Open over 1 Lateral file)

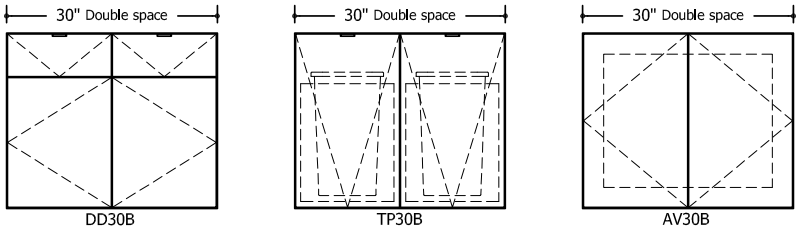

DD30B
(2 Drawers over 2 Doors)

TP30B
(Double trash pullout
2 receptacles)

AV30B
(2 Doors, AV venting large wire access)

Highline Twenty-Five Collection

Credenzas
Conference Height: 29″
Configurations: 18″ and 36″ modules

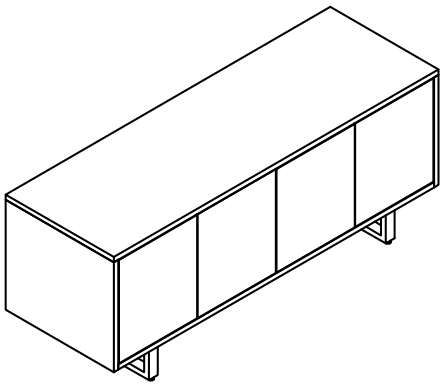

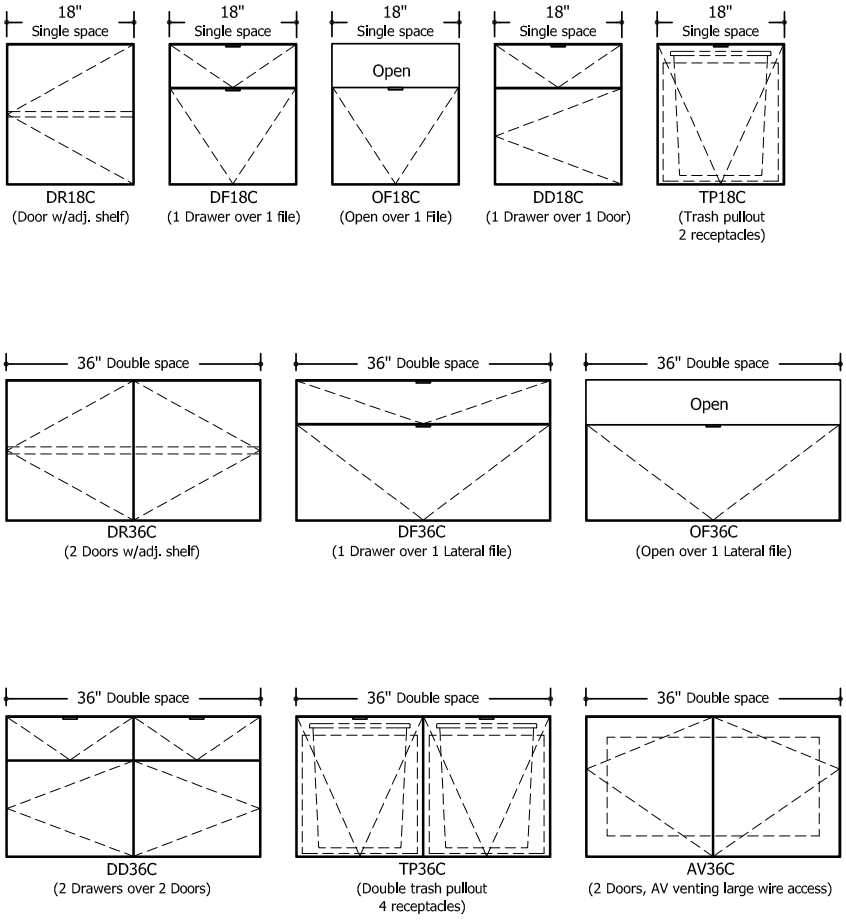

Highline Twenty-Five Collection

Credenzas
Buffet Height: 34″
Configurations: 18″ and 36″ modules

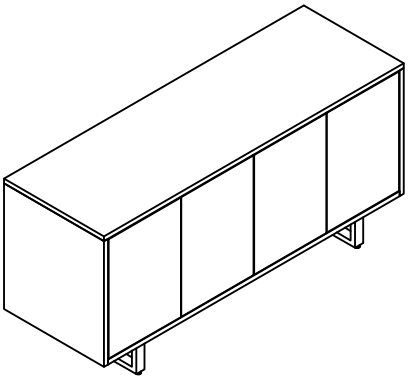

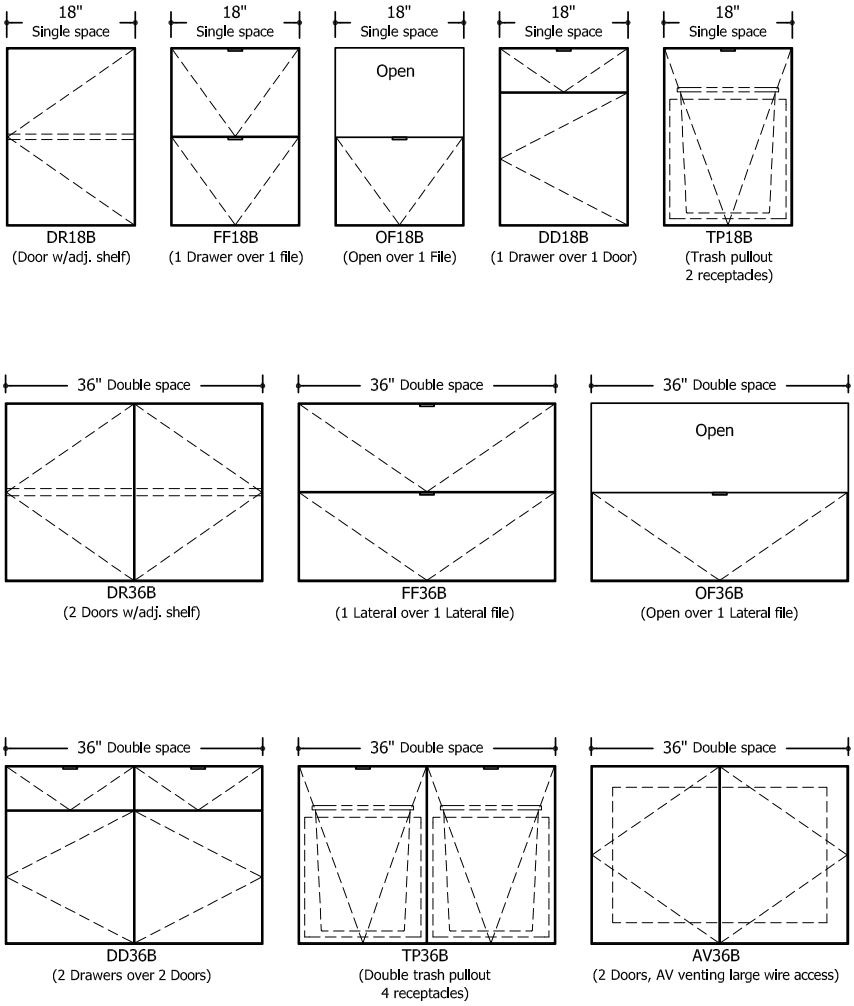

Terms and Conditions of Sale

Sales by DatesWeiser (hereinafter called the Seller) are made only on the terms and conditions set forth below. These terms and conditions may be modified or supplemented only by a written document signed by an authorized representative of the Seller. These terms and conditions supersede any prior and/or contemporaneous agreements or correspondence between Purchaser and Seller.

Ordering Information
All orders must be in writing. Product information required for a Purchase Order is described on **page 5**.

A Purchase Order is not binding on the Seller until Purchaser has received Seller's Order Confirmation.

Pricing Policies
All written quotations expire thirty (30) days from the date of issuance and can be withdrawn by written notice anytime during that period.

Prices are List, F.O.B. from the DatesWeiser factory in **Buffalo, New York**. Shipping, packaging, inside delivery, uncrating, installation, storage, and sales tax (if applicable) shall be in addition to the list price and shall be itemized and charged separately.

List prices are subject to change without notice.

List prices shall be those prices in effect on the date the Seller receives a completed Purchase Order unless shipment is requested more than 120 days after the order entry, in which case prices in effect on the date of shipment apply.

Taxes
All sales, use, excise, and other taxes applicable to the sale of DatesWeiser Products shall be paid by the Purchaser. To claim an exemption from any tax, Purchaser must submit to Seller the appropriate exemption certificates.

Terms of Payment
A fifty percent (50%) deposit is due at the time of order placement and the remainder due within thirty (30) days of the date of invoice.

If, in the judgment of Seller, Purchaser's financial condition does not justify the terms of the payment, Seller may require full or partial payment in advance.

The ship date the Seller specifies is considered the invoice date for billing. The ship date will be confirmed by the Seller via a separate Acknowledgement issued upon receipt of a signed Purchase Order.

Past due accounts shall be charged one and one-half percent (1.5%) per month, or the highest rate permitted by law, whichever is less, and will be added to the outstanding balance. In the event Purchaser defaults on payment, Purchaser shall be liable for all collection costs, including reasonable attorney's fees and costs.

Changes and Cancellations
A confirmed order may not be changed or cancelled, in whole or in part, without prior written consent of Seller. Changes may effect delivery dates. Expenses incurred because of changes shall be charged to Purchaser. In event of cancellations, Purchaser will be liable for reasonable cancellation charges, including a $500 administrative fee.

Seller is not required to comply with Purchaser's request to change a confirmed order, but all reasonable requests to change confirmed orders will be honored. Orders for special or custom Product may not be cancelled.

To be effective, a Change Order must be in writing, signed by the Purchaser or Purchaser's agent, and confirmed in writing by the Seller. Change Orders are subject to a charge for materials, labor, and other costs as determined by Seller.

Security Interest
Until Seller receives the full payment for the Product, Seller shall have a security interest in the Product. Purchaser agrees to perform all acts, including but not limited to the execution and filing of documentation, which may be necessary to perfect and assure the security interest of Seller.

Customer's Own Material (COM)
A Purchaser who requests a material not standard to Seller's line of Products (described on **page 6**) must submit a sample of the requested material to Seller prior to entry of a purchase order. Seller shall determine if the material is suitable to its manufacturing processes and meets any requirements of Underwriter Laboratories. If the COM is acceptable, Seller will then establish a price for using the COM on the Product in question.

Customer's Specified Laminates (CSL)
For custom wood or paint finishes add $725 net per finish. This is a one-time matching charge. Custom finishes may extend delivery time up to four (4) weeks. Control samples of custom finishes will be provided.

Hardware
Final adjustment of furniture hardware such as hinges, drawer slides, drawer pulls, etc., at the installation and as a punch-list item, if required, is the Purchaser's responsibility.

Design
All Products shown in the Seller's Price List and Specifications Guide are, and remain, the property of the Seller, who reserves the exclusive right to manufacture them. All dimensions shown are to be considered approximate. Seller reserves the right to make changes in price, dimensions, design and/or construction without prior notice.

Shop Drawings
Seller allows for one (1) set of full shop drawings and one (1) round of minor drawing revisions in its pricing and scheduling. Thereafter, any significant changes in design, including dimensions, engineering details, and materials, or delays in reviewing and approving shop drawings, may necessitate additional charges and cause schedule delays. Seller reserves the right to determine the impact of any design changes and/or delays and will promptly notify those involved of any adjustments to cost and schedule.

Field and Hold Dimensions
If a dealer or third party is responsible for providing installation, the following is required: Full responsibility for providing accurate and timely field dimensions or hold to dimensions (in cases where walls are not erected) as it effects the ultimate fit of the installation. As an alternative, upon request, Seller can provide a cost for sending a field technician to the project site to assume responsibility for field dimensions and site evaluation.

FREIGHT AND DELIVERY

Products are carefully inspected and packaged before leaving the factory to ensure they reach their destination in excellent condition. Whenever possible, the Seller will ship in accordance with the Purchaser's instructions. If Purchaser does not specify shipping instructions, Seller will use its best judgment to determine the most suitable shipping method, route, and carrier.

Conditions beyond the control of Seller, including weather, available facilities and traffic conditions, may affect time of delivery.

Storage
If the Purchaser cannot accept delivery per the ship date specified in the Seller's Acknowledgement, the Seller may transfer the merchandise to storage, either at its facility or at another facility. Purchaser will be charged a storage fee of two percent (2%) of the invoice for every thirty (30) days the products are stored at the Seller's facility.

For products stored in another facility, all out-of-pocket costs of storage, including transportation and warehousing fees, will be at the Purchaser's expense.

The Purchaser will be invoiced for all product charges on the date the Products are transferred to storage. Storage fees will accrue monthly in full month increments (they are not pro-rated for partial months) and will be added to the first invoice, which will also include non-product charges such as shipping, installation, etc.

Returns
Purchasers may not return Products without Seller's written approval and shipping instructions. Unauthorized returns, and returns shipped inconsistently with Seller's instructions, will be automatically refused by the Seller's receiving department.

Products not currently offered for sale by Seller, including special and custom Products, shall not be authorized for return. All returned Products must be unused, in original condition and in original Seller shipping cartons. No refund or credit shall be given for damaged Products.

CLAIMS

All shipments for Sellers Product are F.O.B. Origin. All risk of loss passes to Purchaser at time of delivery to carrier. Purchaser shall inspect all Products upon receipt and note any damage on the Bill of Lading and make an immediate request for inspection of damage by carrier. Seller is not responsible for damage that occurs in transit or storage.

Damage that becomes apparent after the Product is unpacked should be reported to the carrier and the Seller within twenty -four (24) hours of receipt. Damage that is incurred at a furniture dealer's warehouse is the responsibility of the furniture dealer.

For claims relating to Product damaged in transit, or for any other claims relating to or arising out of the transportation of the Product, Purchaser must seek recovery from the carrier. Seller may, upon request, assist Purchaser with filing of such claims with the carrier.

Claims for defects, errors, or shortages must be made in writing by Purchaser against Seller within 72 hours after delivery. Failure to make such claim within 72 hours shall constitute unconditional acceptance of the Products and a waiver of any apparent defects, errors, or shortages.

WARRANTY

Seller warrants its Products to the original Purchaser to be free of defects in workmanship and materials under normal use and under conditions for which the Product was designed for a period of five (5) years. This remedy is exclusive. Seller does not authorize any person to create for it any obligation or liability.

During this warranty period, Seller will repair, or at its option, replace, such Product proven to be defective. Seller shall not be liable for commercial loss or any consequential or incidental damages that may arise as a result of defective Product.
This limited warranty does not apply to:

- Damage caused by a carrier other than the Seller.
- Product not properly maintained per Seller instructions. Maintenance and proper environmental conditions are described in Sellers's Published Price List. All furniture should be used in a stable, controlled atmosphere and positioned to avoid direct sunlight. Ideal climate is 65 to 75 degrees Fahrenheit with 30 to 55% relative humidity.
- Normal wear and tear or acts or omissions of parties other than Seller. This warranty does not cover any product repaired or altered by any person not so authorized by Seller, including user modification, improper use or installation of Products.
- Customer's Own Material and Customer's Specified Laminates.
- Durability or suitability of any exterior surface coatings or treatments.
- Matching of color, grains or texture except as specified in the Seller's Order Confirmation and the finish sample.
- Natural variations occurring in wood, stone, and glass shall not be considered defects, and the Seller does not guarantee the colorfastness or matching of colors, grains or textures, or surface hardness of such materials.
- Adequacy of any electronic components.
- Durability of glass used in Product.
- Live Edge natural slabs used for table tops.

Seller must be notified within 72 hours of receipt of shipment for any initial claims for defects, errors or shortages.

To obtain the benefit of this warranty, contact Seller in writing. It is the responsibility of the Purchaser to arrange the return of Product to Seller and to assume all costs relating to any incidental or consequential damages.

Disclaimers
THE EXPRESS WARRANTIES CONTAINED IN THIS SELLING POLICY ARE THE ONLY WARRANTIES THAT DATESWEISER MAKES AND TAKE THE PLACE OF ALL OTHER WARRANTIES, EXPRESS OR IMPLIED, INCLUDING ANY WARRANTIES OF MERCHANTABILITY OR FITNESS FOR PARTICULAR PURPOSE AND ALL OTHER WARRANTIES ARISING FROM COURSE OF DEALING OR USAGE OF TRADE.

Corporate Office / Factory
1700 Broadway Street
Buffalo, NY 14212
p 716.891.1700

DATESWEISER

datesweiser.com