# Technical Information

DATESWEISER

# Highline Collection

## Conference Tables
## Overall Elevations and Clearance

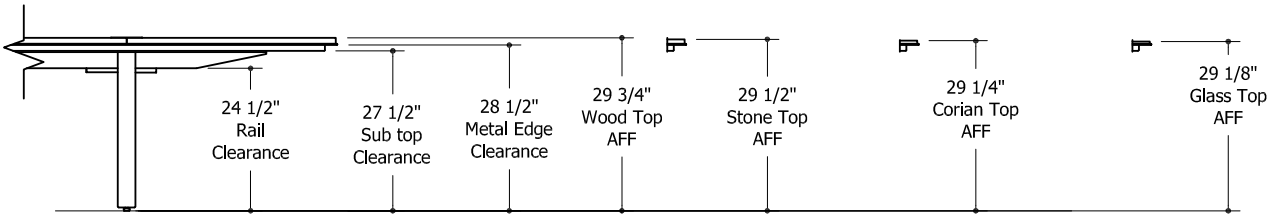


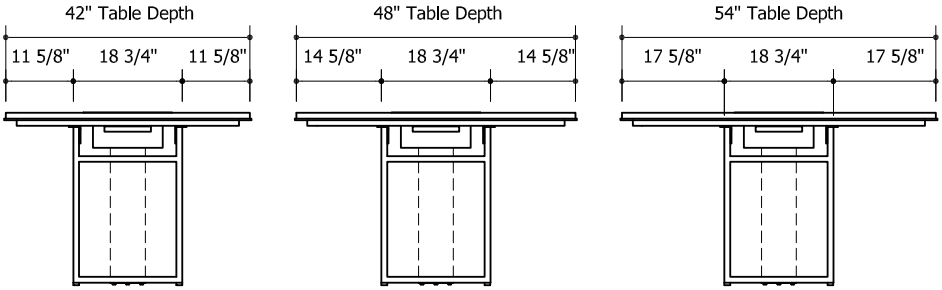


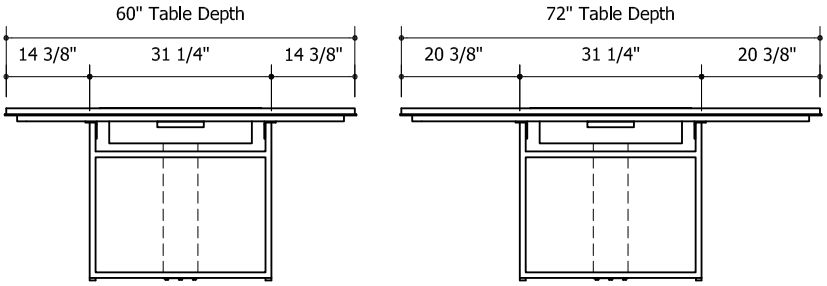

# Highline Collection

## Conference Tables
## Top Construction

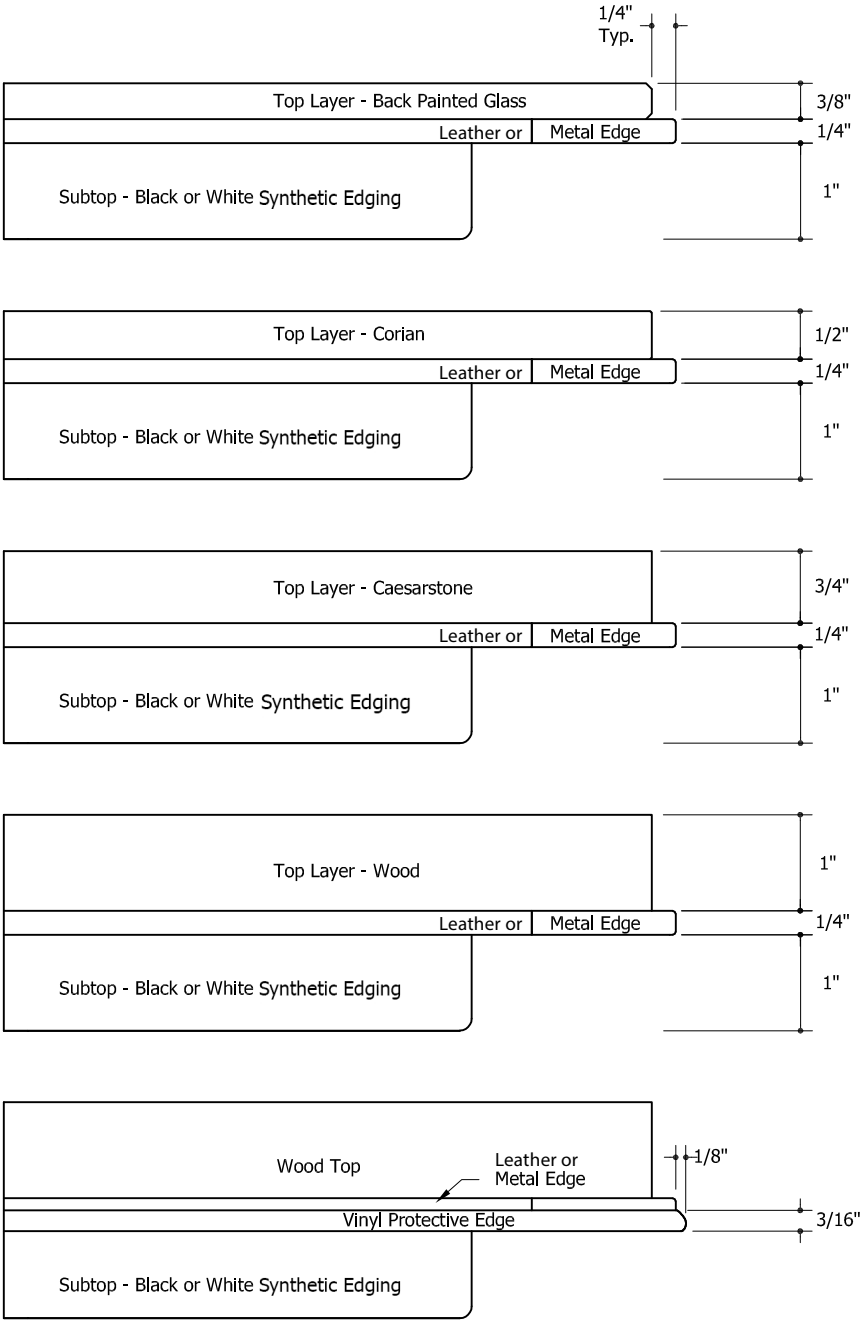

# Highline Collection

## Conference Tables
## Base Construction / Wire Management Column

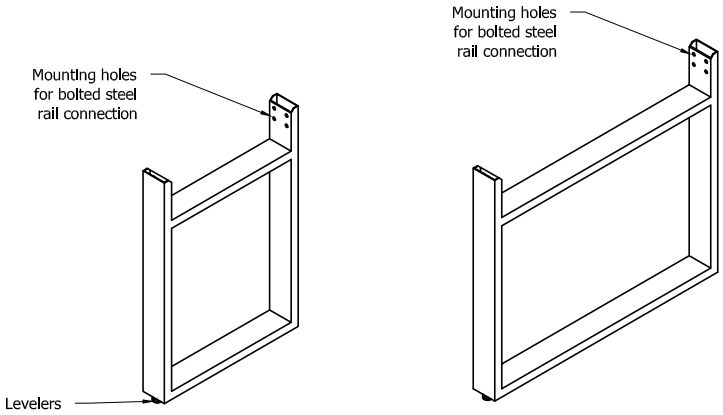


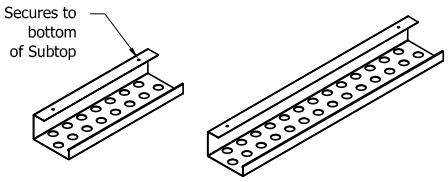


Highline Small Base
- Used on 42″ / 48″ / 54″ widths
- Also used in combination with large bases for some elliptical and trapezoid configurations
- Construction: 1″ x 3″ tubular steel

Highline Large Base
- Used on 60″ / 72″ widths
- Also used in combination with small bases for some elliptical and trapezoid configurations
- Construction: 1″ x 3″ tubular steel

Wire Manager
- Length varies by table 16″ or 28″ x 5″ deep x 3″ high
- Construction: Steel with black powder coat metallic finish (MC12)

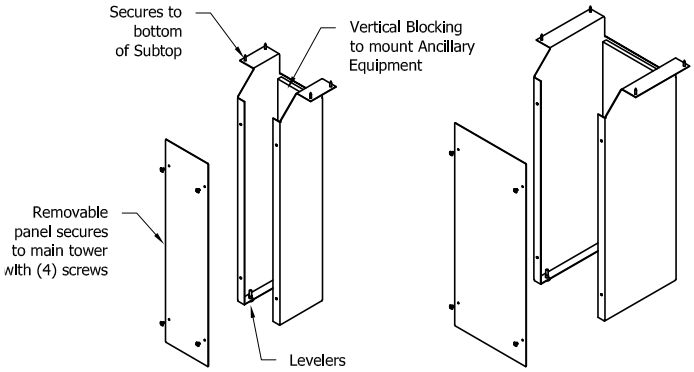


02WMC6X6 02WMC10X10

Wire Management Column
- Ordered separately but required with all power options
- Location is flexible but placement on table centerline is recommended

| | |
|---|---|
| 02WMC6X6 | 6" x 6" with clear inside of 4" x 5" |
| 02WMC10X10 | 10" x 10" with clear inside of 8" x 9" |

# Highline Collection

## Conference Tables
## Power & Connectivity
## Table Top: Small and Large

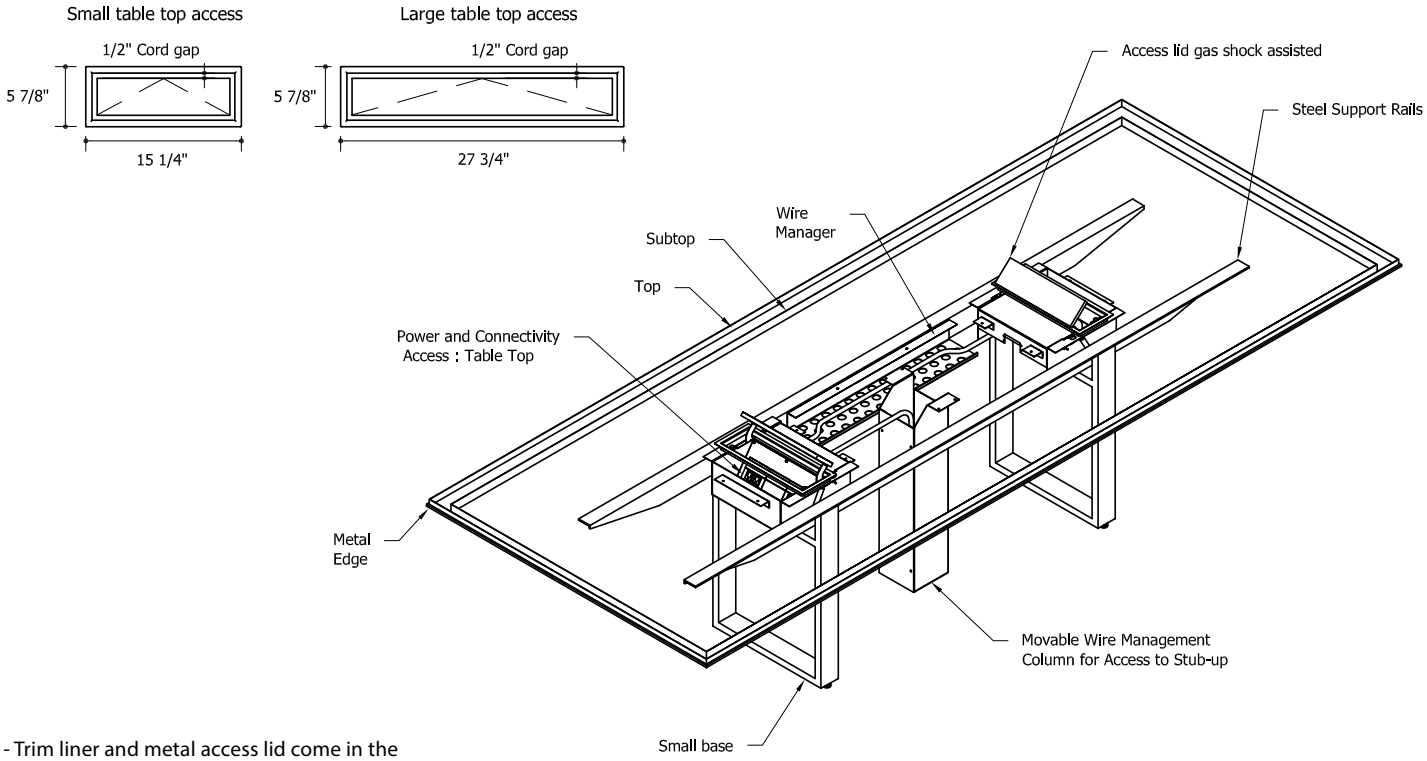


- Trim liner and metal access lid come in the specified metal finish
- Small access lid used on 42" / 48" / 54" tables
- Large access lid used on 60" / 72" tables

Small Table Top access (shown populated)

Small Table Top access (shown with optional faceplate)

- Provided with 2 AC power modules - specify hardwired (HW) or plug in (PI), 3 double space and 2 single space blank plates
- For additional connectivity, replace blank plates with Extron single or double space AAP plates as desired. For more information see extron.com

# Highline Collection

## Conference Tables
## Power & Connectivity
## Table Top: Small

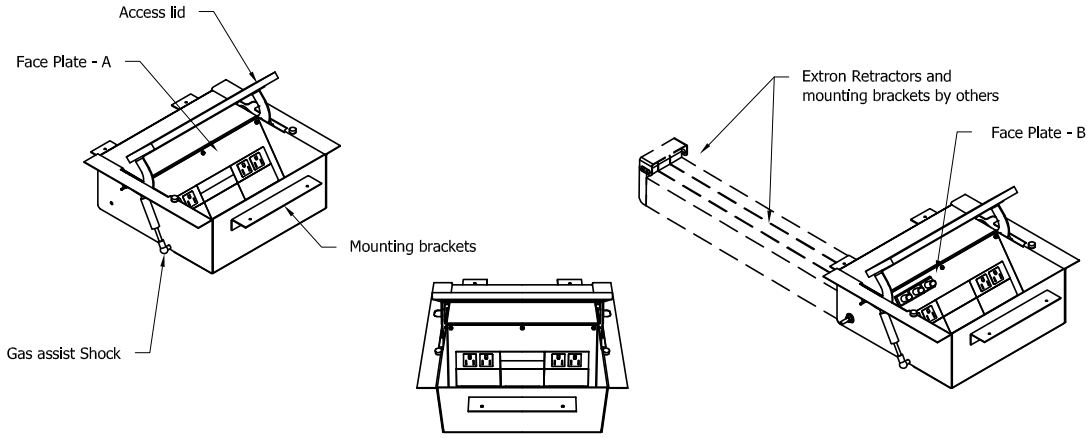


- Interior: Black powder coat metallic finish (MC12)
- Used on 42" / 48" / 54" width conference tables
- Also used in combination with large boxes for some elliptical and trapezoid configurations
- Connectivity: Face Plate "A" Qty 1 is standard
- Connectivity: Face Plate "B" is used with Extron retractors
- Face Plates are removable to allow for easy population by AV installer
- Provided with 2 AC power modules - specify hardwired (HW) or plug in (PI), 3 double space and 2 single space blank plates
- For additional connectivity, replace blank plates with Extron single or double space AAP plates as desired. For more information see extron.com

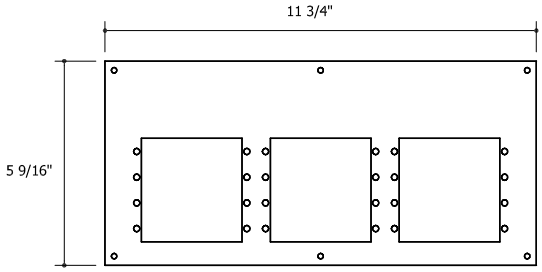


Connectivity Face Plate "A"

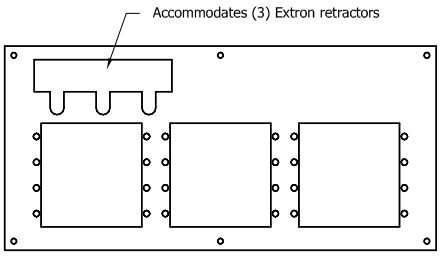


Optional Connectivity Face Plate "B"

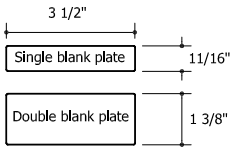


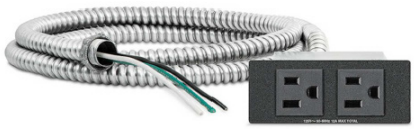

AC Module Hardwired (HW)
- 3/8" diameter x 6' long metal-clad cable with 6" pigtail
- Additional knockouts for series wiring
- 12A max per module

AC Module Plug In (PI)
- 7.5' detachable soft cord
- 6A max per module

# Highline Collection

## Conference Tables
## Power & Connectivity
## Table Top: Large

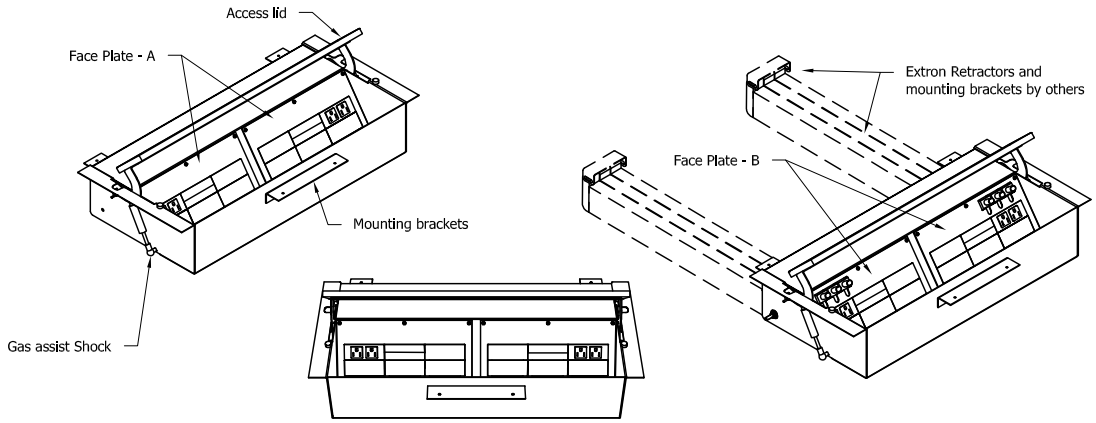


- Interior: Black powder coat metallic finish (MC12)
- Used on 60″ / 72″ width tables
- Also used in combination with Highline Small boxes for some elliptical and trapezoid configurations
- Connectivity: Face Plate "A" Qty 2 is standard
- Connectivity: Face Plate "B" is used with Extron retractors
- Face Plates are removable to allow for easy population by AV installer
- Provided with 2 AC power modules - specify hardwired (HW) or plug in (PI), 8 double space and 4 single space blank plates
- For additional connectivity, replace blank plates with Extron single or double space AAP plates as desired. For more information see extron.com

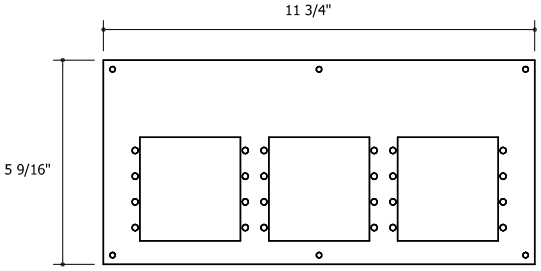


Connectivity Face Plate "A"

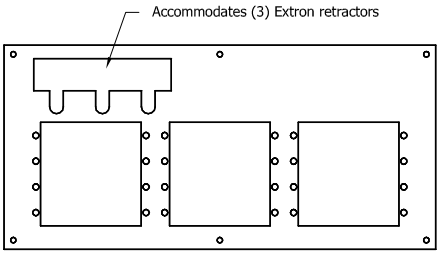


Optional Connectivity Face Plate "B"

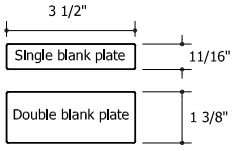


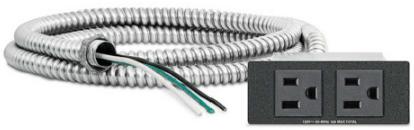

AC Module Hardwired (HW)
- 3/8″ diameter x 6′ long metal clad cable with 6″ pigtail
- Additional knockouts for series wiring
- 12A max per module

AC Module Plug In (PI)
- 7.5′ detachable soft cord
- 6A max per module

# Highline Collection

## Conference Tables
## Power & Connectivity
## Undermount

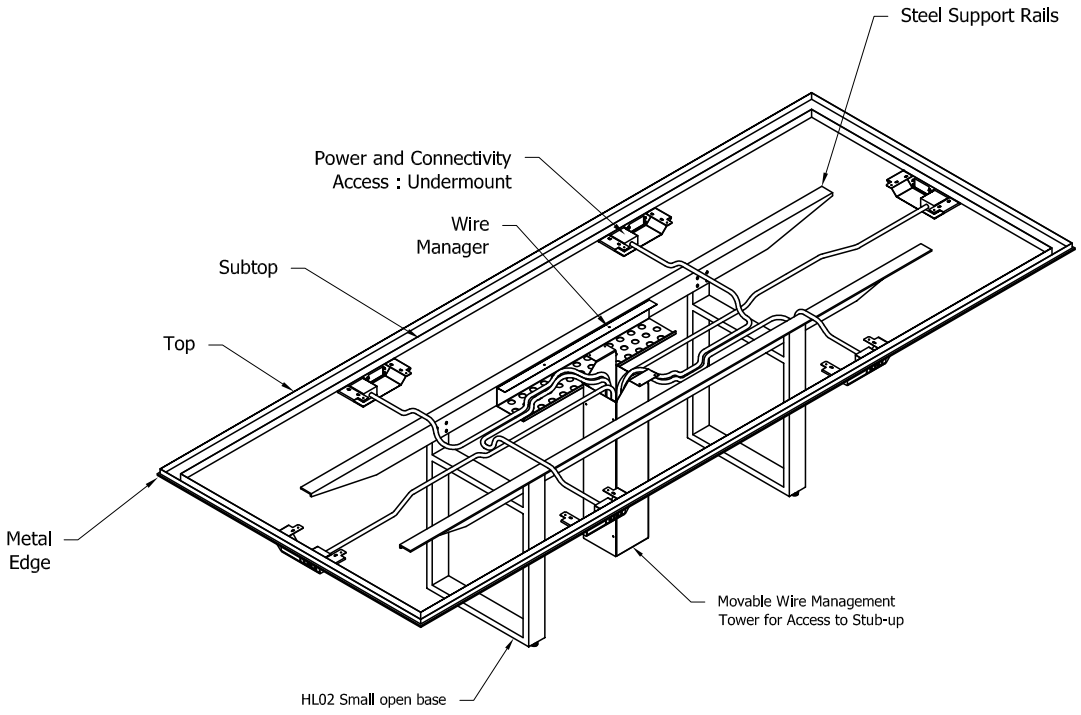


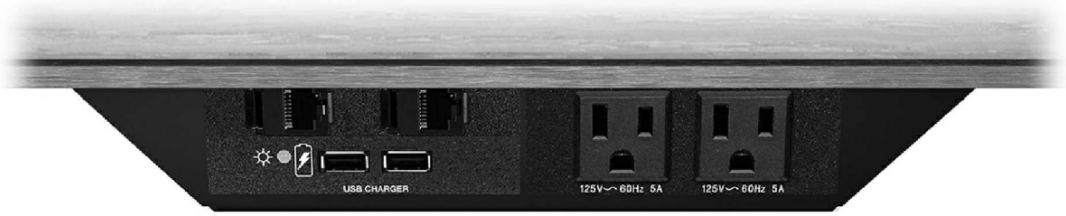


Undermount access (shown populated)
- Provided with 1 AC power module - specify hardwired (HW) or plug in (PI), and 2 single space blank plates
- For additional connectivity, replace blank plates with Extron single or double space AAP plates as desired. For more information see extron.com

# Highline Collection

## Conference Tables
## Power & Connectivity
## Undermount

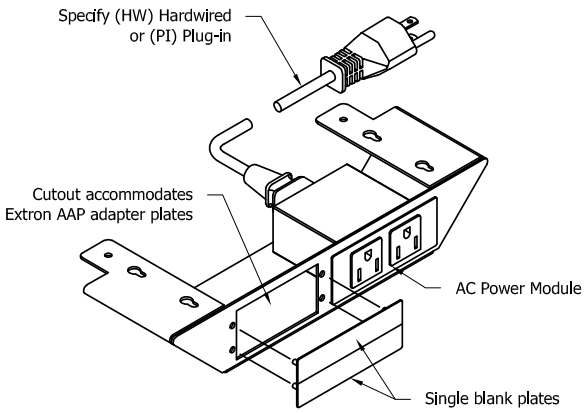


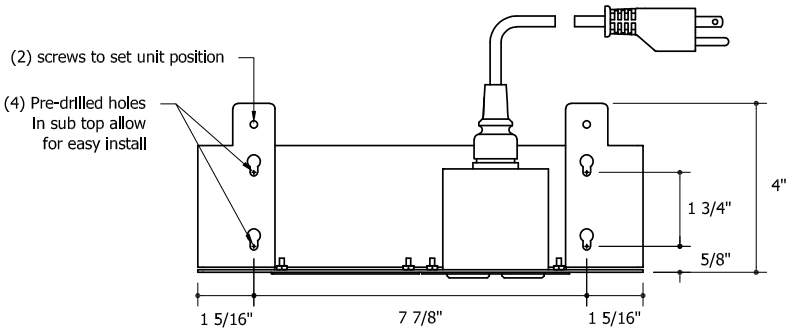


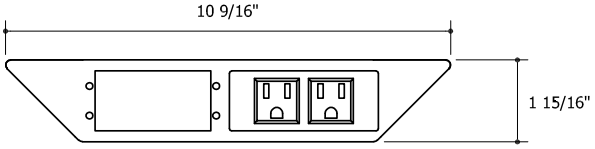


- Interior: Black powder coat metallic finish (MC12)
- Provided with 1 AC power module - specify hardwired (HW) or plug in (PI), and 2 single space blank plates
- For additional connectivity, replace blank plates with Extron single or double space AAP plates as desired. For more information see extron.com

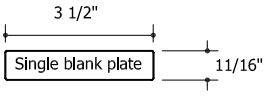


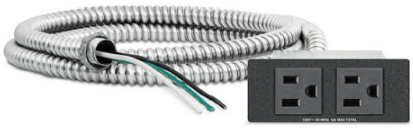

AC Module Hardwired (HW)
- 3/8" diameter x 6' long metal-clad cable with 6" pigtail
- Additional knockouts for series wiring
- 12A max per module

AC Module Plug In (PI)
- 7.5' detachable soft cord
- 6A max per module

# Highline Collection

## Meeting Tables
## Overall Elevations and Clearance

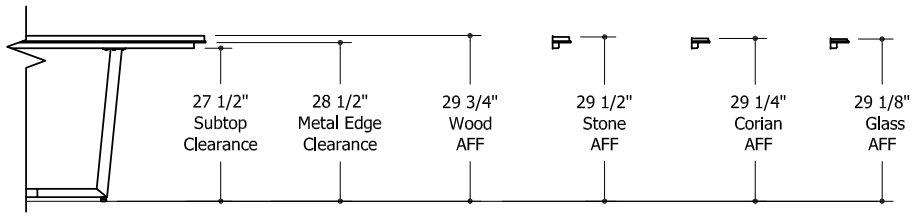


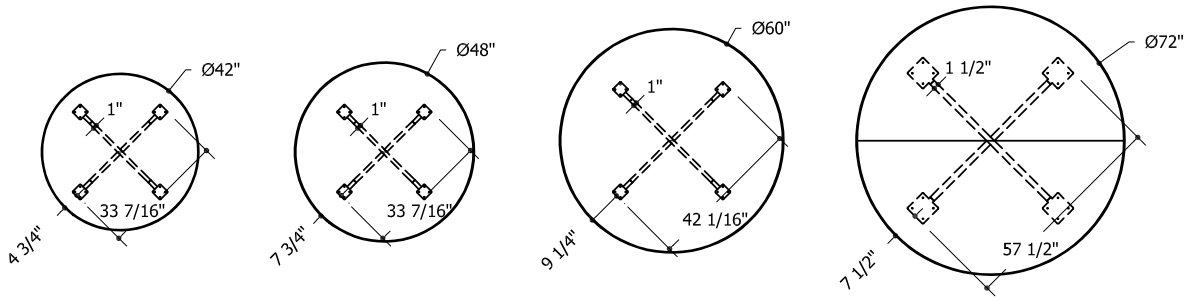


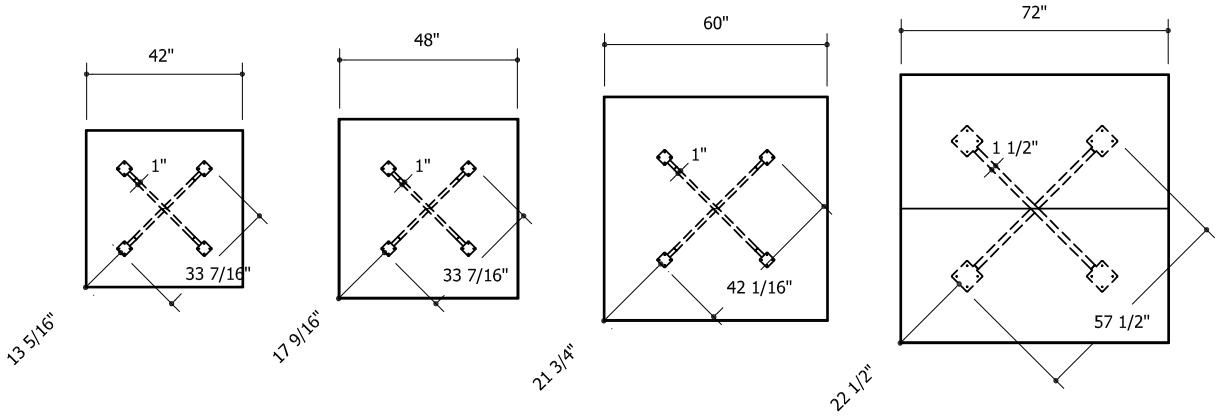


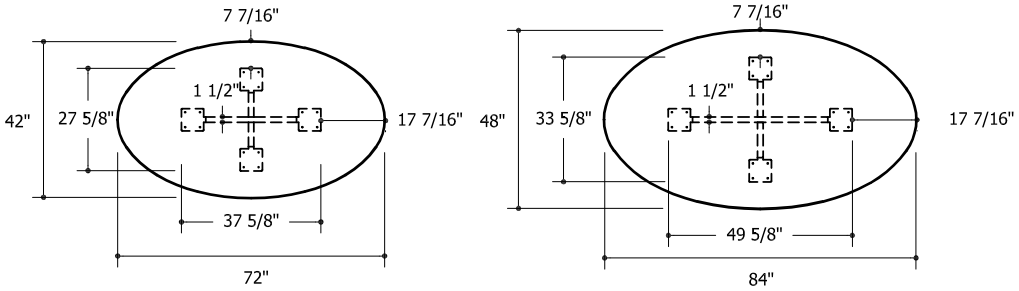

# Highline Fifty Collection

## Meeting Tables
## Top Construction

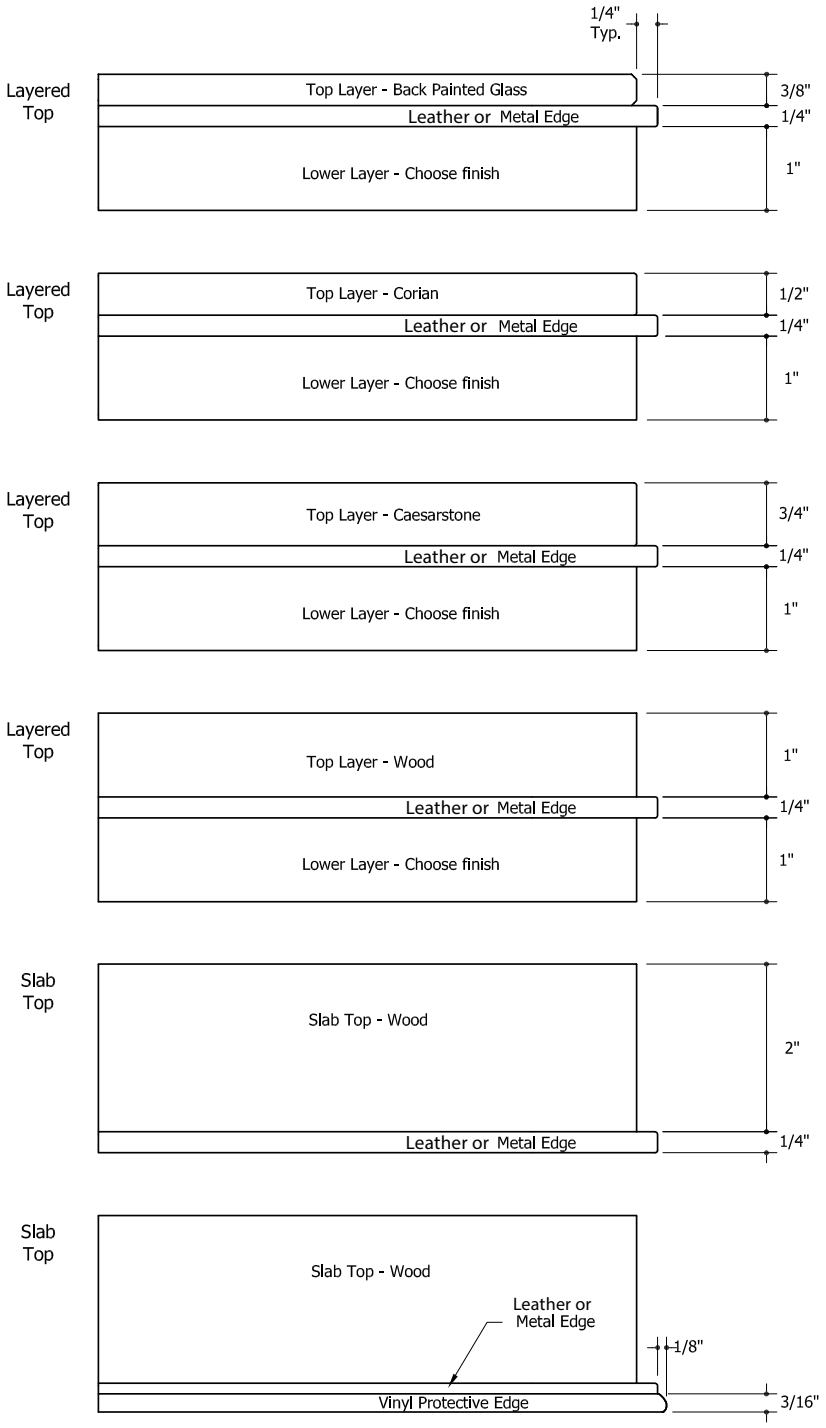

# Highline Collection

## Meeting Tables
## Top Construction

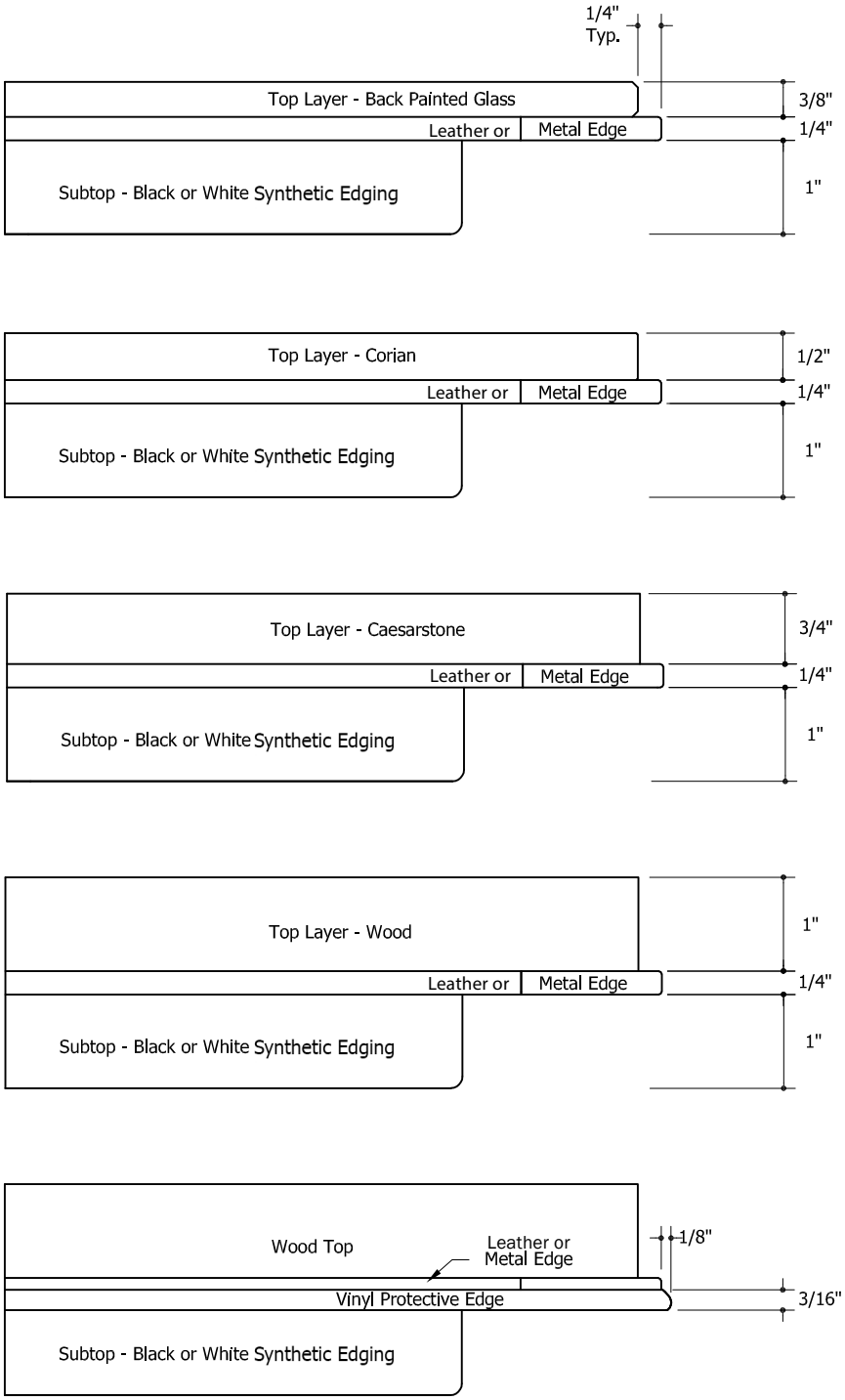

# Highline Collection

## Meeting Tables
## Base Construction

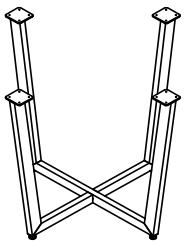

Small "X"- base

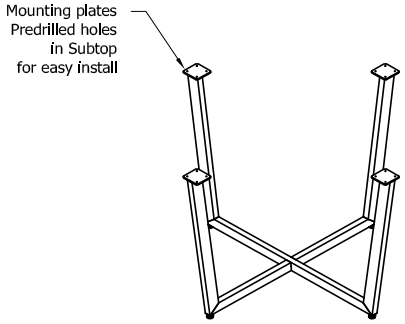


Large "X"- base

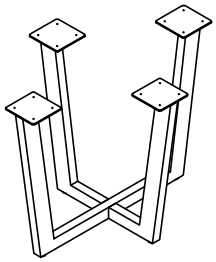

Small "XE"- base

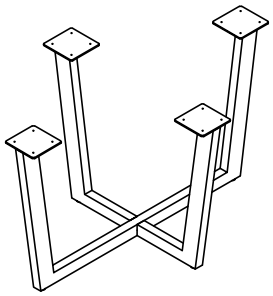

Large "XE"- base

Construction
- Tubular steel "X" base
- Small "X" base: 42" / 48" Round and Square meeting tables
- Large "X" base: 60" / 72" Round and Square meeting tables

- Small "XE" base: 42" Elliptical meeting tables
- Large "XE" base: 48" Elliptical meeting tables

- "XP" Wire Management base is automatically included when power and connectivity are specified on Square and Round meeting tables
- "XEP" Wire Management base is automatically included used when power and connectivity are specified on Elliptical meeting tables

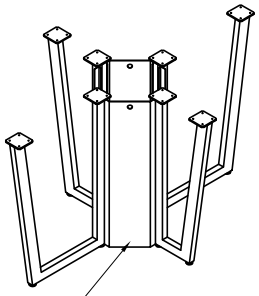


"XEP"- base

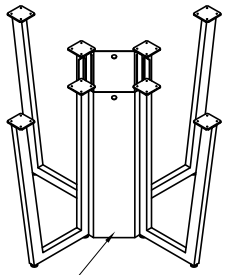


"XP"- base

# Highline Collection

## Meeting Tables
## Power & Connectivity
## Table Top

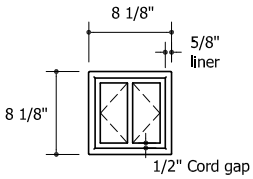


Metal Trim Liner with Matching Metal Access doors

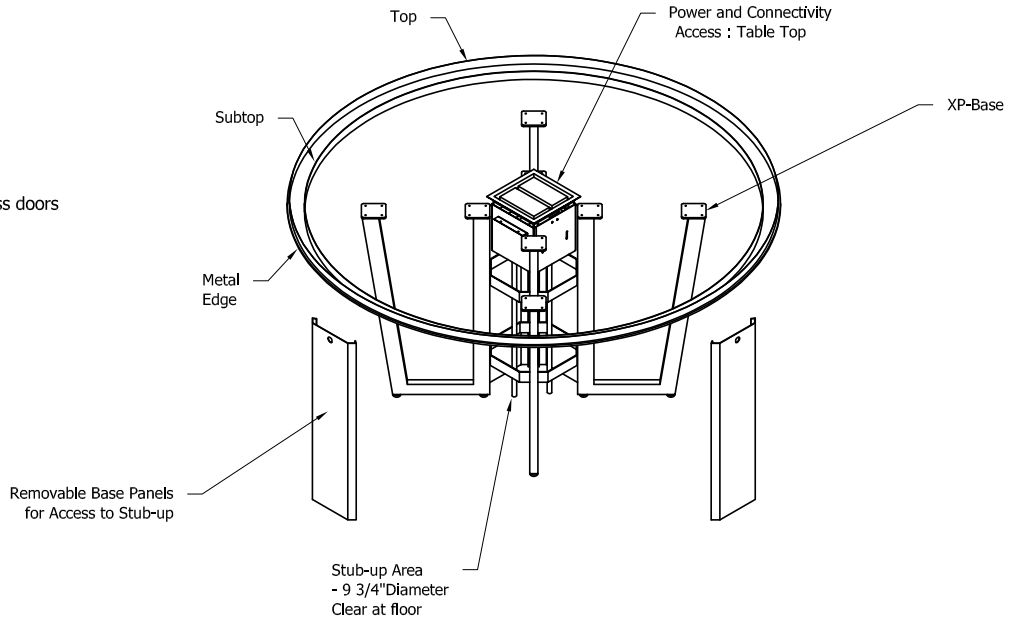

Meeting Table Top access (shown populated)
- Provided with 2 AC power modules - specify hardwired (HW) or plug in (PI), 1 double and 2 single space blank plates
- For additional connectivity, replace blank plates with Extron single or double space AAP plates as desired. For more information see extron.com

# Highline Collection

## Meeting Tables
## Power & Connectivity
## Table Top

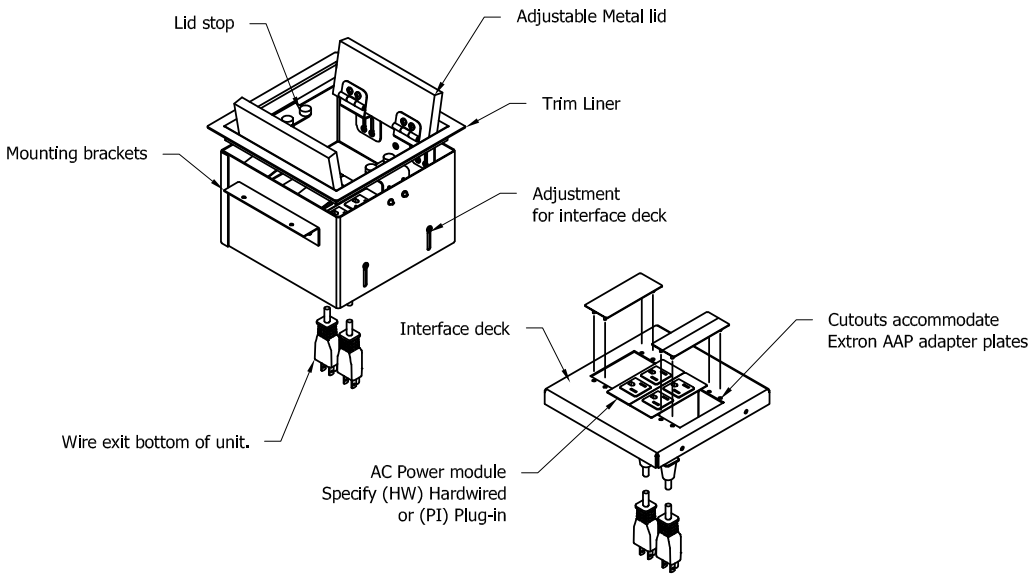


Meeting Table Top access
- Provided with 2 AC power modules - specify hardwired (HW) or plug in (PI), 1 double and 2 single space blank plates
- For additional connectivity replace blank plates with Extron single or double space AAP plates as desired. For more information see extron.com

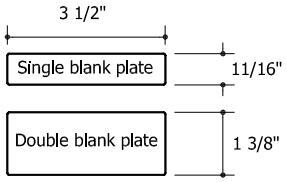


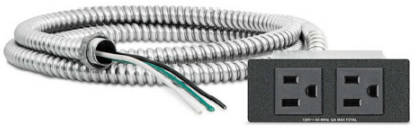

AC Module Hardwired (HW)
- 3/8″ diameter x 6′ long metal-clad cable with 6″ pigtail
- Additional knockouts for series wiring
- 12A max per module

AC Module Plug In (PI)
- 7.5′ detachable soft cord
- 6A max per module

# Highline Collection

## Meeting Tables
## Power & Connectivity
## Undermount

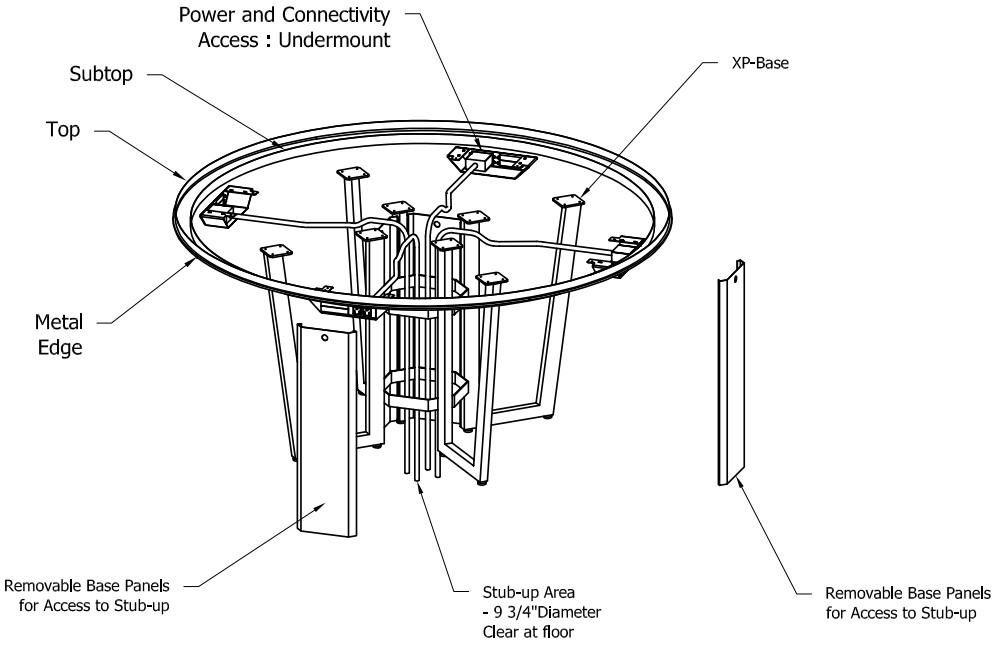

Undermount access (shown populated)
- Interior: Black powder coat metallic finish (MC12)
- Provided with 1 AC power module - specify hardwired (HW) or plug in (PI), and 2 single space blank plates
- For additional connectivity, replace blank plates with Extron single or double space AAP plates as desired. For more information see extron.com

# Highline Collection

## Meeting Tables
## Power & Connectivity
## Undermount

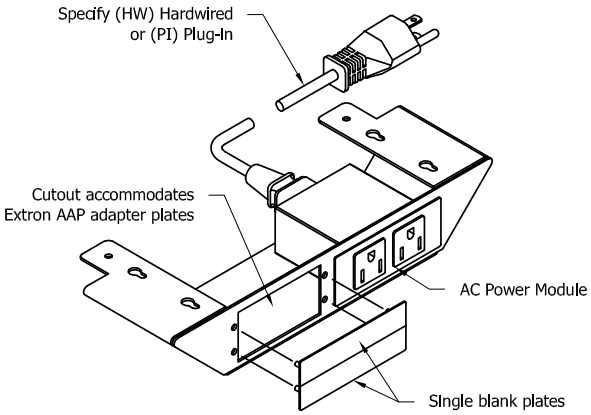


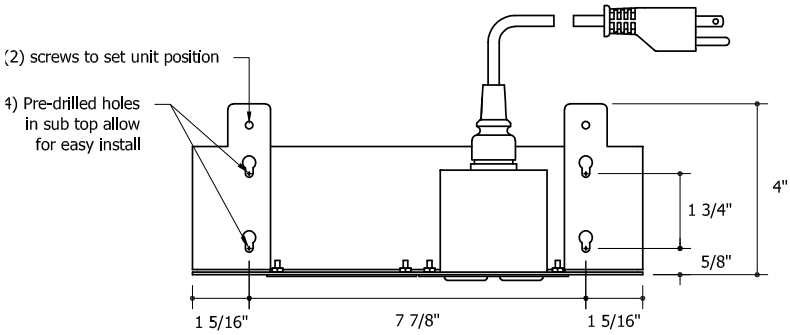


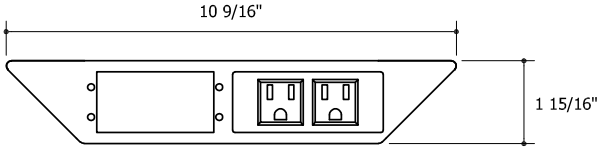


Undermount Access
- Interior: Black powder coat metallic finish (MC12)
- Provided with 1 AC power module - specify hardwired (HW) or plug in (PI), and 2 single space blank plates
- For additional connectivity, replace blank plates with Extron single or double space AAP plates as desired. For more information see extron.com

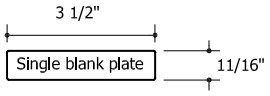


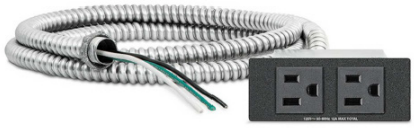

AC Module Hardwired (HW)
- 3/8" diameter x 6' long metal-clad cable with 6" pigtail
- Additional knockouts for series wiring
- 12A max per module

AC Module Plug In (PI)
- 7.5' detachable soft cord
- 6A max per module

# Highline Collection

## Credenzas
## Elevations and Optional Tops

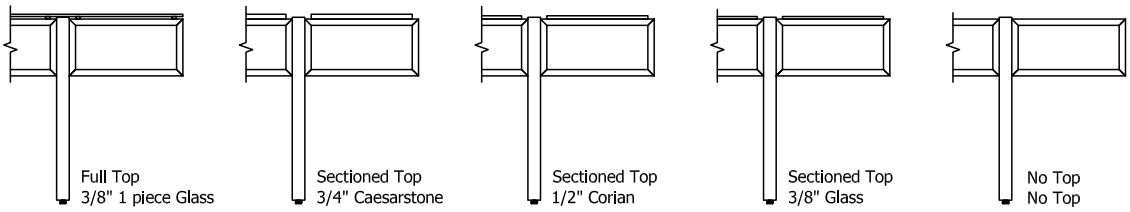


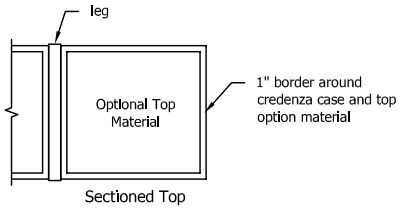


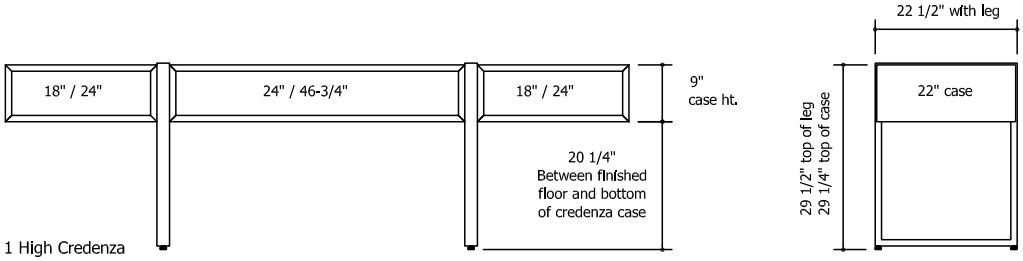


1 High Credenza

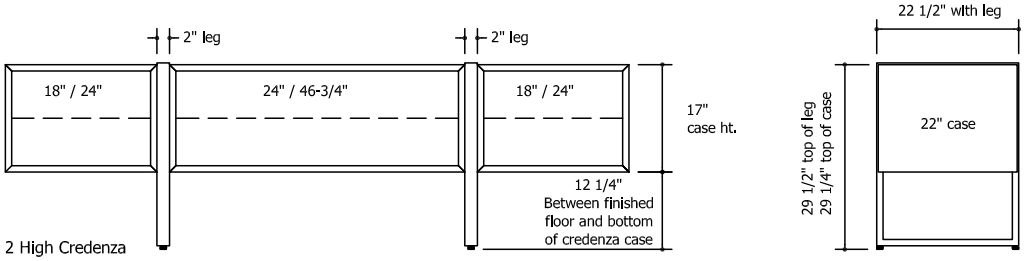


2 High Credenza

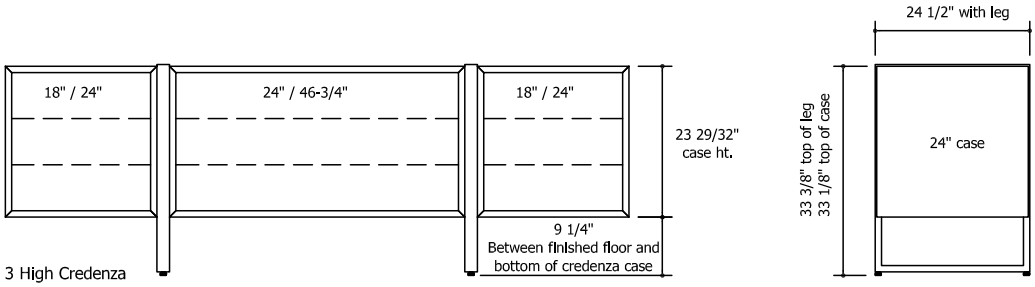


3 High Credenza

# Highline Collection

## Credenza
## Leg and Case Details

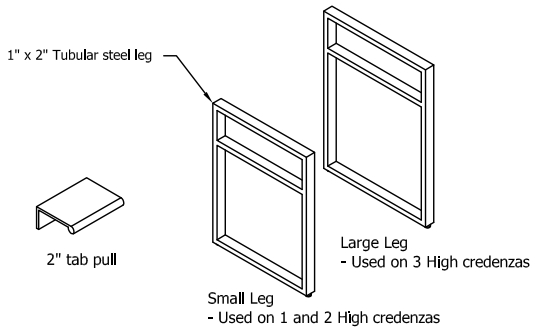


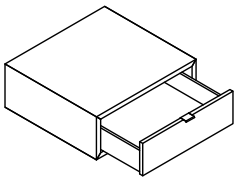


Credenza Notes
- Pulls and trash liners come in the specified metal finish
- All drawers have a 2" tab pull located in the center of the top edge of each drawer front
- All drawers use partial extension, self-closing undermount slides
- Pull-out trash units use full extension side mount slides
- All doors use free swing hinges and touch latches
- All credenza top material finishes are secured to the case with silicone except for tops finished with full clear glass (FG GC00)
- Full clear glass (FG GC00) rests atop of 3/8″ bumpers located on top of case
- Drop-through trash option is available with all top options except with full clear glass (FG GC00)

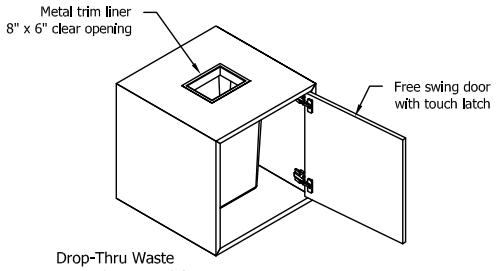


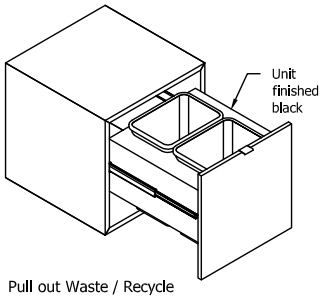


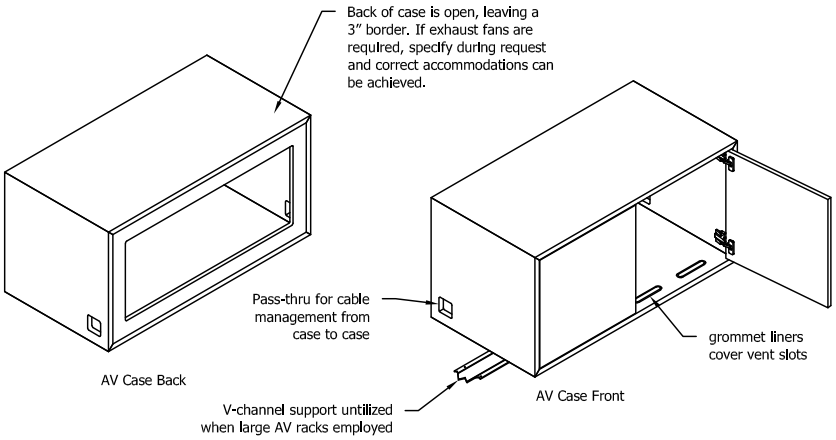


AV CASE
- All AV cases have an open back with a 3" border
- Coordinate AV requirements with the interior clearance dimensions provided below to ensure fit

1B" Case
14.25" wide x 22.18" deep x 21.15" high

24" Case
20.25" wide x 22.18" deep x 21.15" high

47" Case
41.25" wide x 22.18" deep x 21.15" high

# Highline Collection

## 1 High Credenza
## Positional Configurations

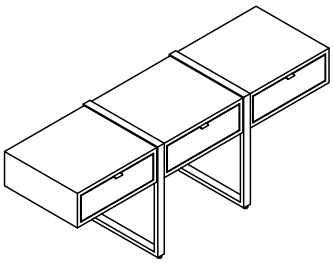

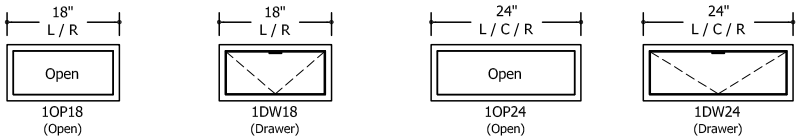


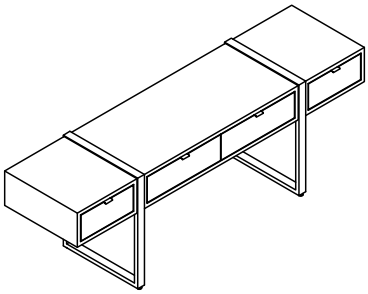

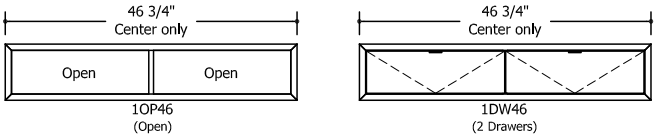

# Highline Collection

## 2 High Credenzas
## Positional Configurations

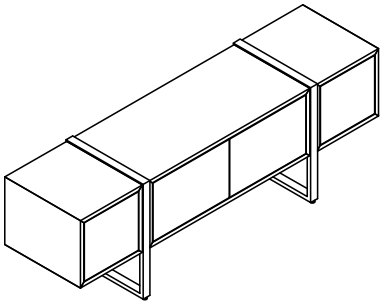

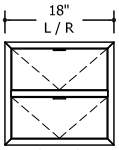


2DW18
(2 Drawers)

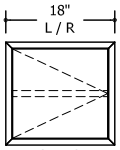


2DR18
(Door w/adj. Shelf)

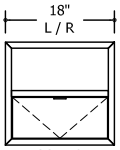


2OW18
(Open over Drawer)

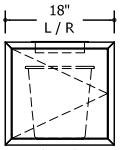


2TT18
(Trash thru Top
w/1 single can only)

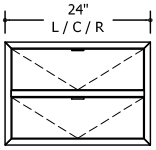


2DW24
(2 Drawers)

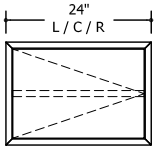


2DR24
(Door w/adj. Shelf)

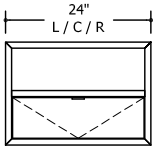


2OW24
(Open over Drawer)

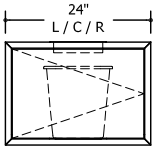


2TT24
(Trash thru Top
w/1 single can only)

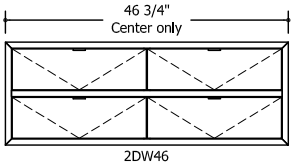


2DW46
(4 Drawers)

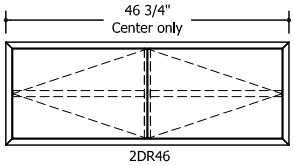


2DR46
(2 Doors w/2 adj. Shelves)

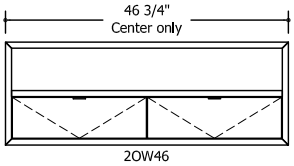


2OW46
(Open over 2 Drawers)

# Highline Collection

## 3 High Credenzas
## Positional Configurations

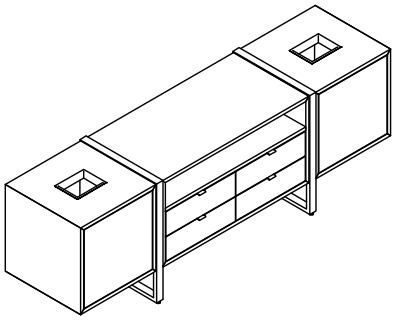

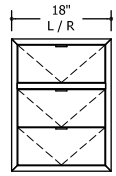


3DW18
(3 Drawers)

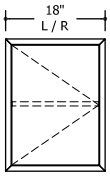


3DR18
(Door w/adj. shelf)

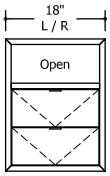


3OW18
(Open over 2 Drawers)

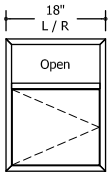


3OR18
(Open over Door)

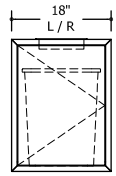


3TT18
(Trash thru top
w/1 single can only)

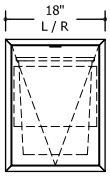


3TP18
(Trash pullout w/2
single cans front to back)

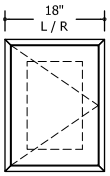


3AV18
(AV case, venting,
Large wire access)

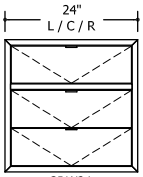


3DW24
(3 Drawers)

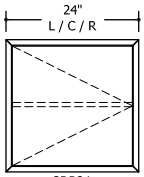


3DR24
(Door w/adj. shelf)

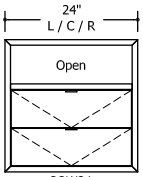


3OW24
(Open over 2 Drawers)

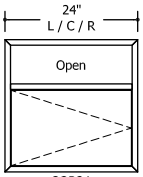


3OR24
(Open over Door)

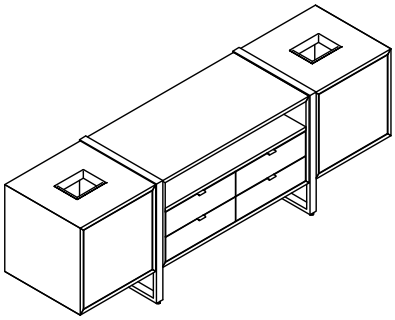

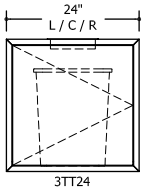


3TT24
(Trash thru top
w/1 single can only)

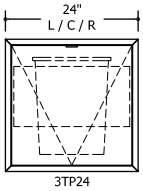


3TP24
(Trash pullout w/2
single cans front to back)

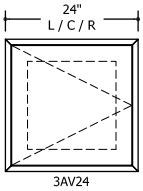


3AV24
(AV case, venting,
Large wire access)

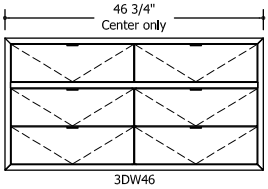


3DW46
(6 Drawers)

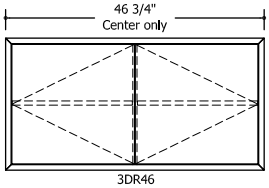


3DR46
(2 Doors w/2adj. shelf)

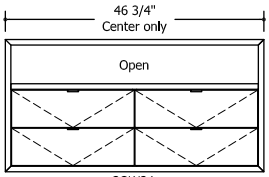


3OW24
(Open over 4 Drawers)

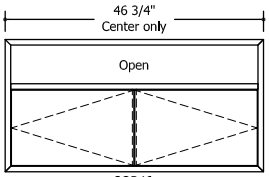


3OR46
(Open over Doors)

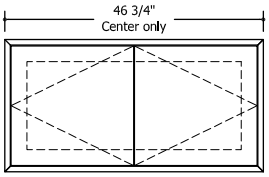


3AV46
(AV case, venting, Large wire access)

# Highline Fifty Collection

## Conference Tables
## Overall Elevations and Clearance

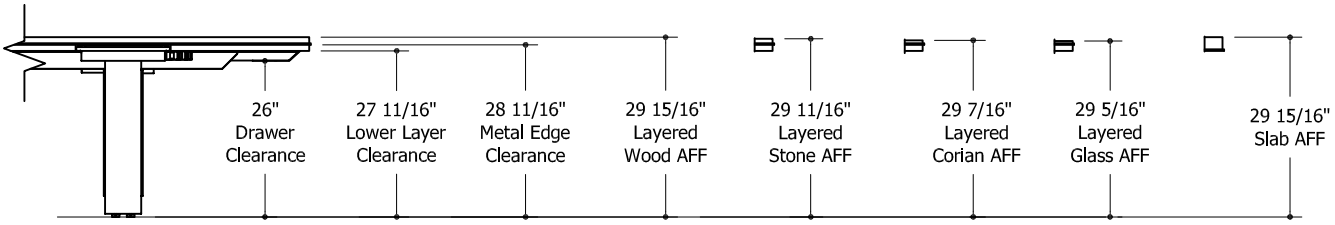


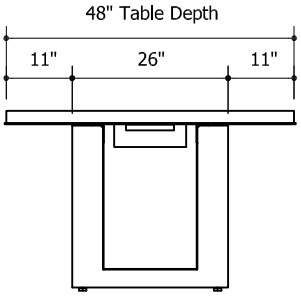


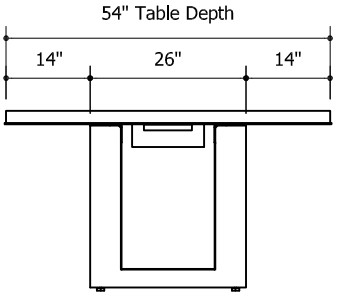


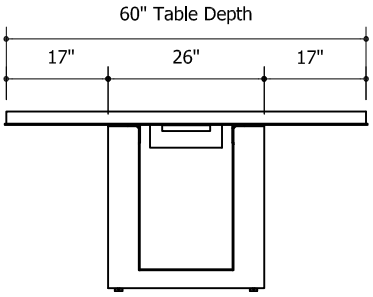


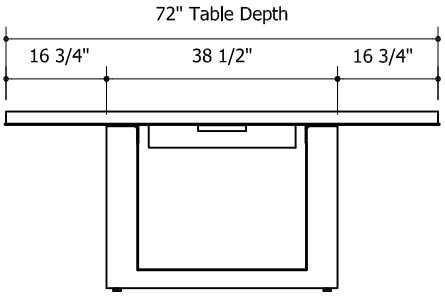

# Highline Fifty Collection

## Conference Tables
## Top Construction

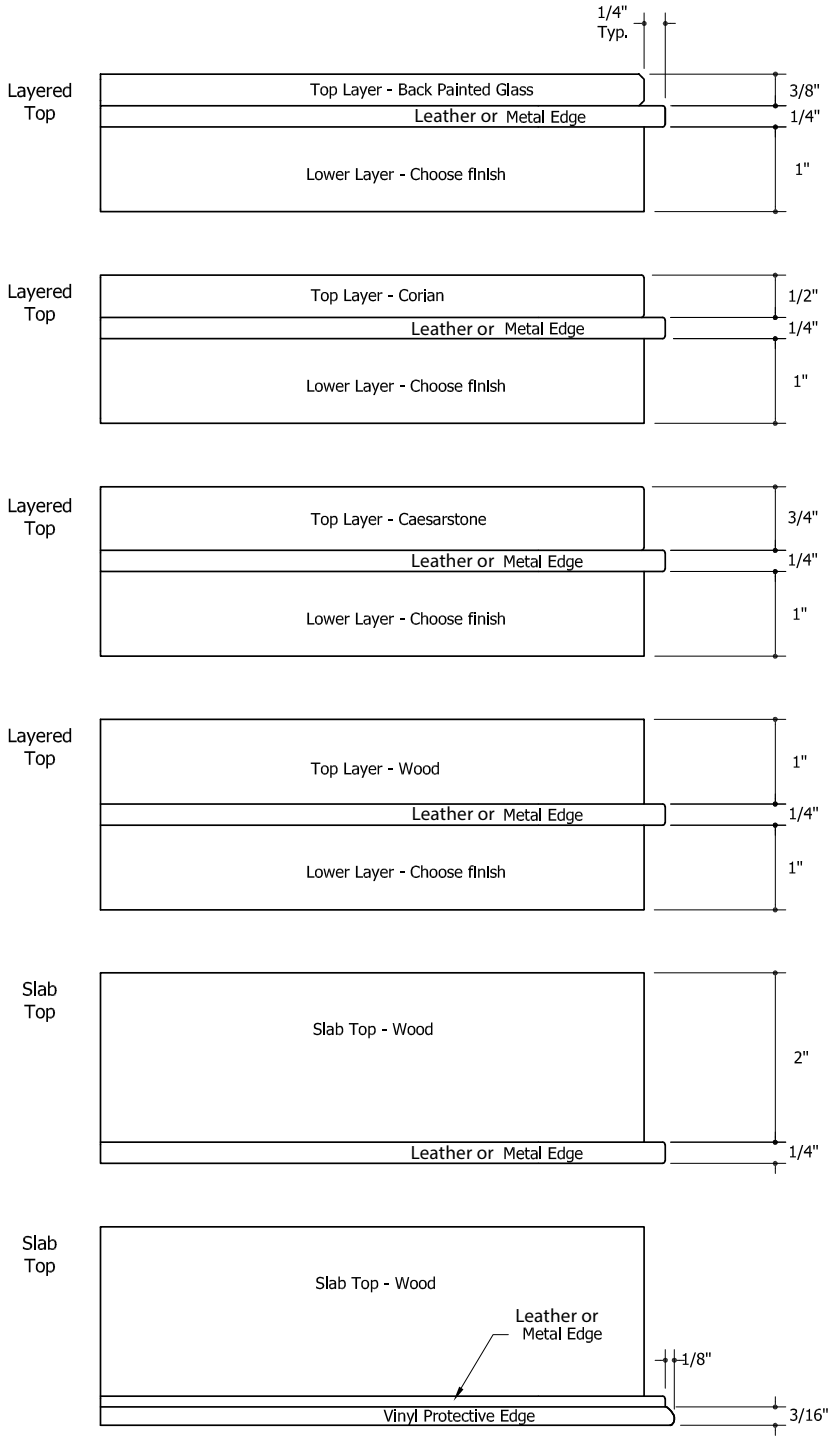

# Highline Fifty Collection

## Conference Tables
## Base Construction

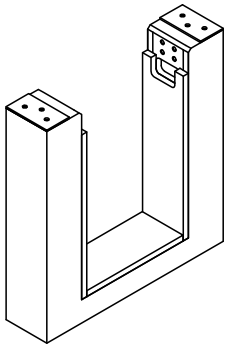

Small base : 42" / 48" / 54" / 60" Deep Tables
"ON"  Open Base, no metal trim

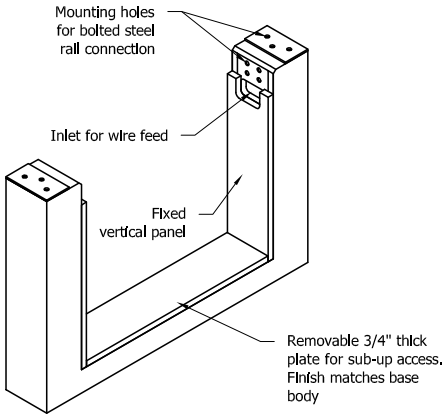


Large base : 72" Deep Tables
"ON"  Open Base, no metal trim

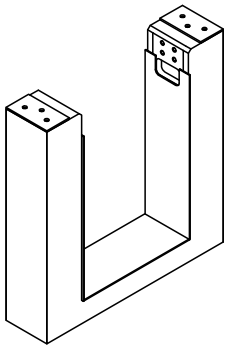

Small base : 42" / 48" / 54" / 60"  Deep Tables
"OT"  Open Base, with metal trim

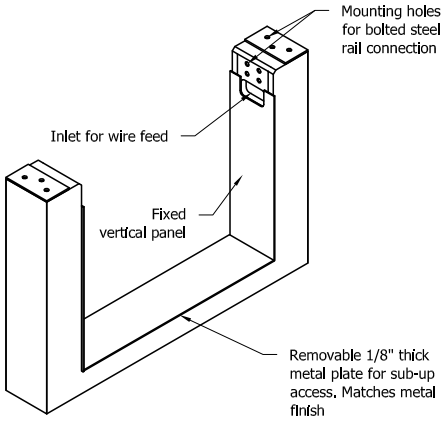


Large base : 72" Deep Tables
"OT"  Open Base, with metal trim

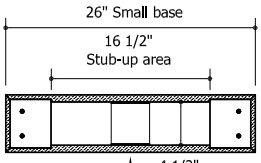


Horizontal section of Small Base

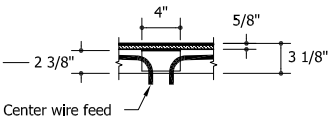


Vertical section at center of Base

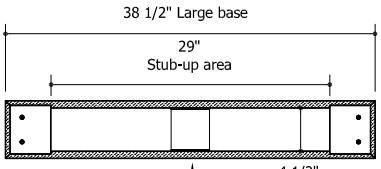


Horizontal section of Large base

# Highline Fifty Collection

## Conference Tables
## Power & Connectivity
## Drawers

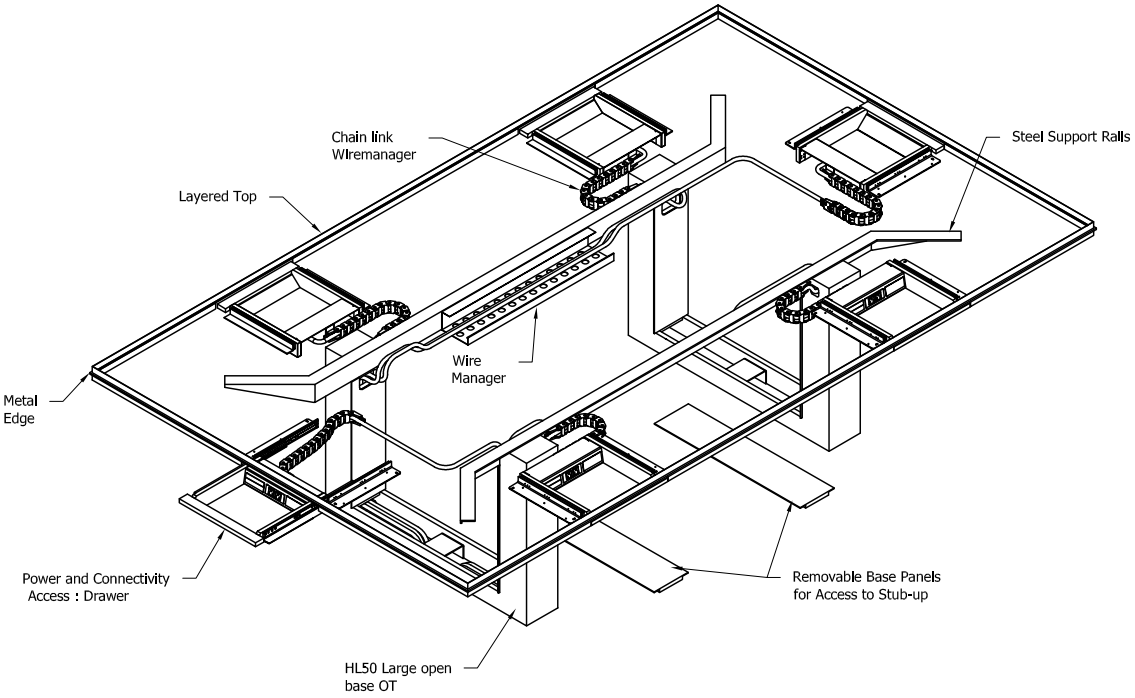

Drawer (shown populated)
- Interior: Black powder coat metallic finish (MC12)
- Provided with 1 AC power module - specify hardwired (HW) or plug in (PI), and 2 single space blank plates
- For additional connectivity, replace blank plates with Extron single or double space AAP plates as desired. For more information see extron.com

# Highline Fifty Collection

## Conference Tables
## Power & Connectivity
## Drawers

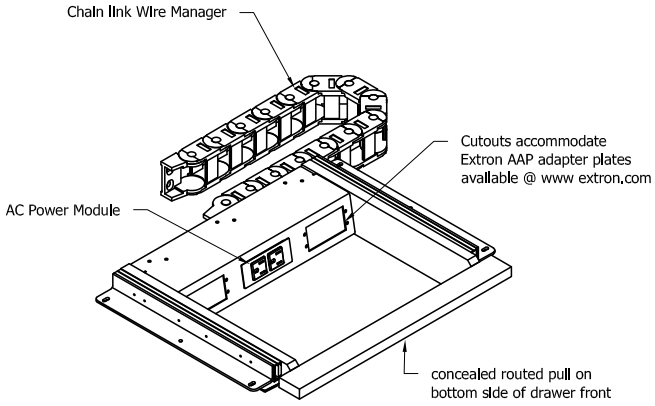


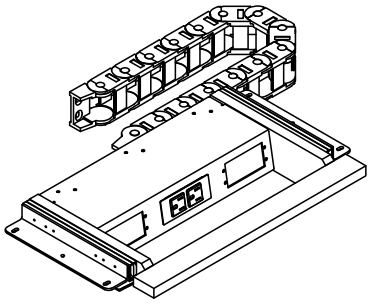

Large Drawer
- 6 1/2" deep x 12 3/4" wide flat storage with 2 1/2" interior height
- 3/8" gap above drawer for cord exit
- Concealed routed finger pull under front
- Used at table ends
- Used along the length of 60" / 72" deep tables
- Interior drawer finish: Black powder coat metallic (MC12)
- Drawer front matches lower layer finish
- Provided with 1 AC power module - specify hardwired (HW) or plug in (PI), and 2 single space blank plates

Small Drawer
- 1 7/8" deep x 12 3/4" wide flat storage with 2 1/2" interior height
- 3/8" gap above drawer for cord exit
- Concealed routed finger pull under front
- Used along the length of 48" / 54" deep tables
- Interior drawer finish: Black powder coat metallic (MC12)
- Drawer front matches lower layer finish
- Provided with 1 AC power module - specify hardwired (HW) or plug in (PI), and 2 single space blank plates

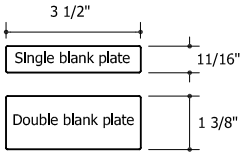

AC Module Hardwired (HW)
- 3/8″ diameter x 6′ long metal-clad cable with 6″ pigtail
- Additional knockouts for series wiring
- 12A max per module

AC Module Plug In (PI)
- 7.5′ detachable soft cord
- 6A max per module

# Highline Fifty Collection

## Conference Tables
## Power & Connectivity
## Table Top: Small and Large

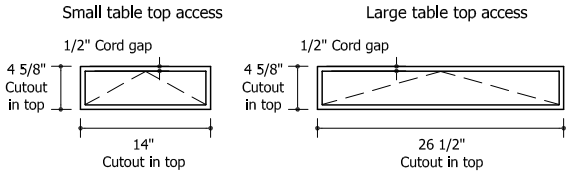


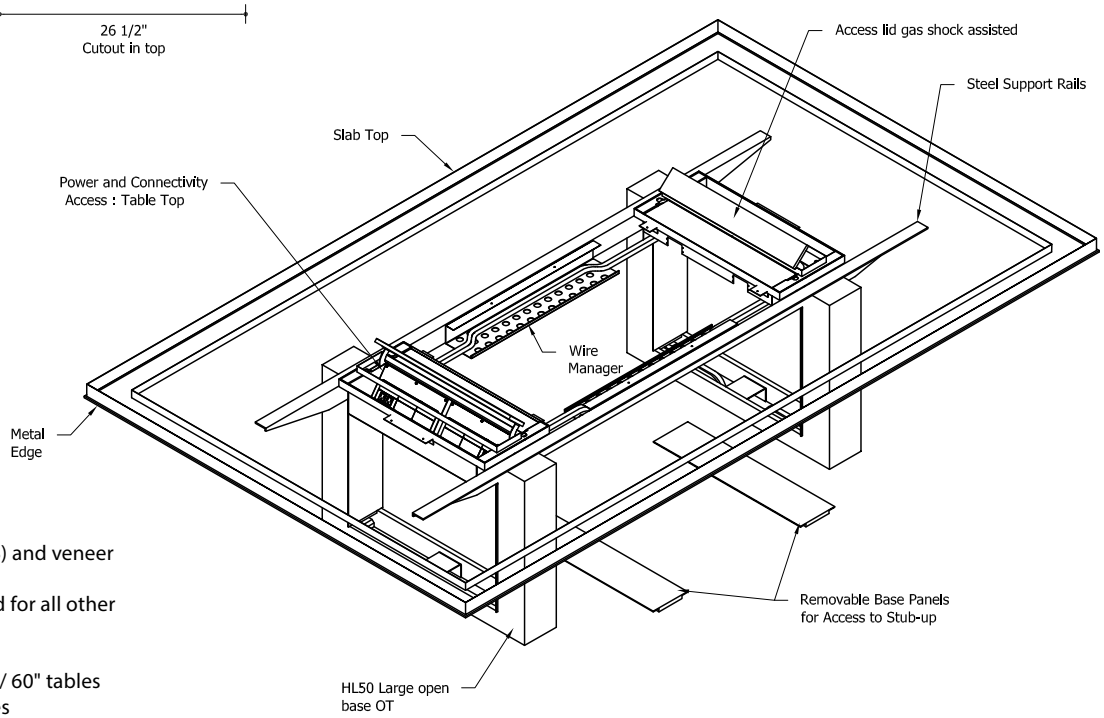


- Wood access lid is used for slab (S) and veneer (V) top material
- Metal access lid and liner are used for all other top materials

- Small access lid used on 48" / 54" / 60" tables
- Large access lid used on 72" tables

Small Table Top access (shown populated)

Small Table Top access (shown with optional faceplate)

- Provided with 2 AC power modules - specify hardwired (HW) or plug in (PI), 3 double space and 2 single space blank plates
- For additional connectivity, replace blank plates with Extron single or double space AAP plates as desired. For more information see extron.com

# Highline Fifty Collection

## Conference Tables
## Power & Connectivity
## Table Top: Large

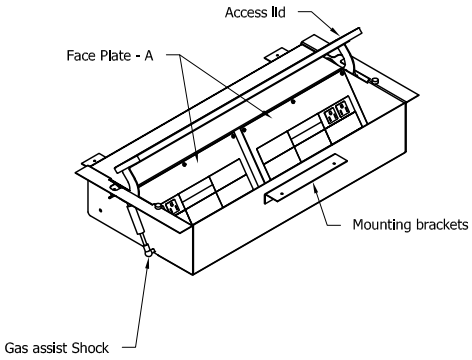


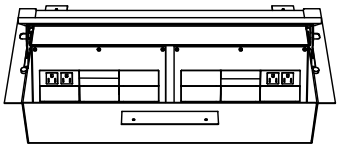

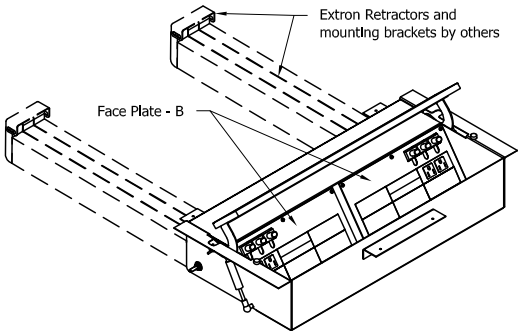


- Interior: Black powder coat metallic finish (MC12)
- Used on 48″ / 54″ / 60″ width tables
- Connectivity: Face Plate "A" Qty 2 is standard
- Connectivity: Face Plate "B" Is used with Extron retractors
- Face Plates are removable to allow for easy population by AV installer
- Provided with 2 AC power modules - specify hardwired (HW) or plug in (PI), 8 double space and 4 single space blank plates
- For additional connectivity, replace blank plates with Extron single or double space AAP plates as desired. For more information see extron.com

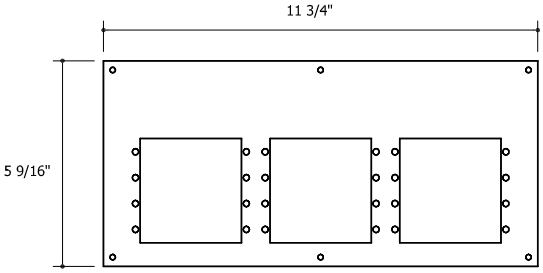


Connectivity Face Plate "A"

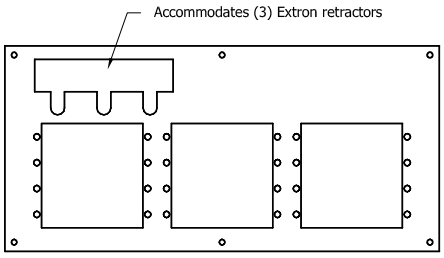


Optional Connectivity Face Plate "B"

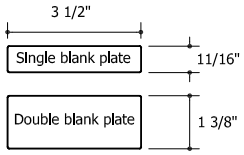


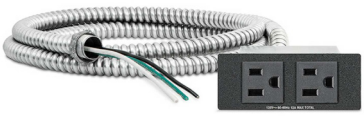

AC Module Hardwired (HW)
- 3/8″ diameter x 6′ long metal-clad cable with 6″ pigtail
- Additional knockouts for series wiring
- 12A max per module

AC Module Plug In (PI)
- 7.5′ detachable soft cord
- 6A max per module

# Highline Fifty Collection

## Conference Tables
## Power & Connectivity
## Table Top Small

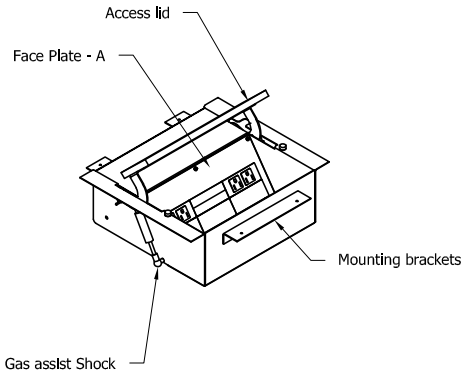


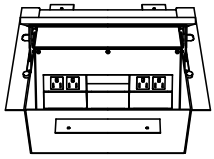

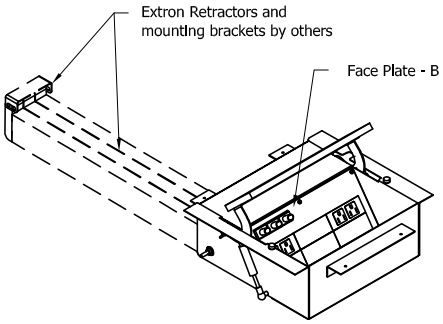


Table Top Access
- Interior: Black powder coat metallic finish (MC12)
- Used on 72″ tables
- Connectivity: Face Plate "A" Qty 1 is standard
- Connectivity: Face Plate "B" Is used with Extron retractors
- Face Plates are removable to allow for easy population by AV installer
- Provided with 2 AC power modules - specify hardwired (HW) or plug in (PI), 4 double space and 2 single space blank plates
- For additional connectivity, replace blank plates with Extron single or double space AAP plates as desired. For more information see extron.com

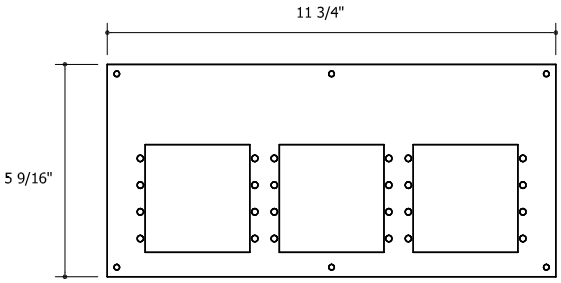


Connectivity Face Plate "A"

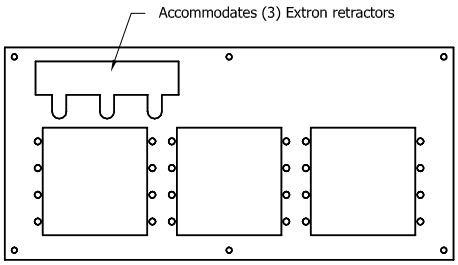


Optional Connectivity Face Plate "B"

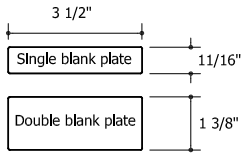


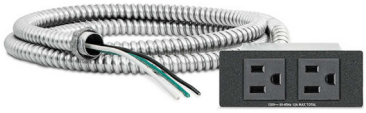

AC Module Hardwired (HW)
- 3/8″ diameter x 6′ long metal-clad cable with 6″ pigtail
- Additional knockouts for series wiring
- 12A max per module

AC Module Plug In (PI)
- 7.5′ detachable soft cord
- 6A max per module

# Highline Fifty Collection

## Conference Tables
## Power & Connectivity
## Undermount

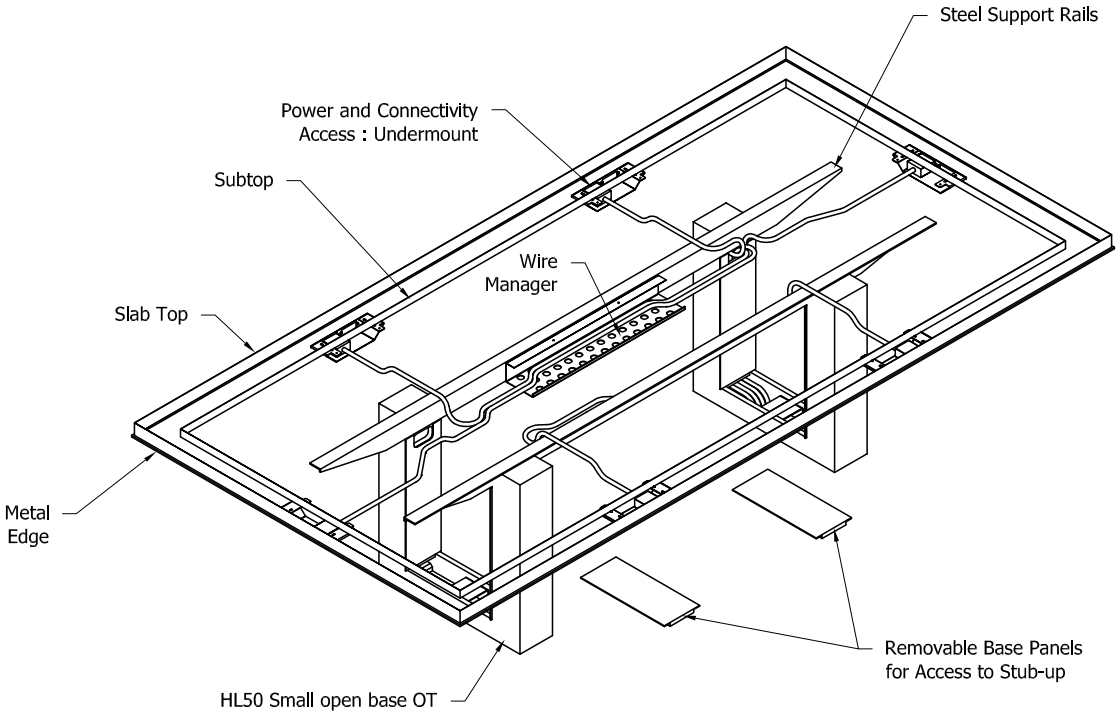

Undermount access (shown populated)
- Black powder coat metallic finish (MC12)
- Provided with 1 AC power module - specify hardwired (HW) or plug in (PI), and 2 single space blank plates
- For additional connectivity replace blank plates with Extron single or double space AAP plates as desired. For more information see extron.com

# Highline Fifty Collection

## Conference Tables
## Power & Connectivity
## Undermount

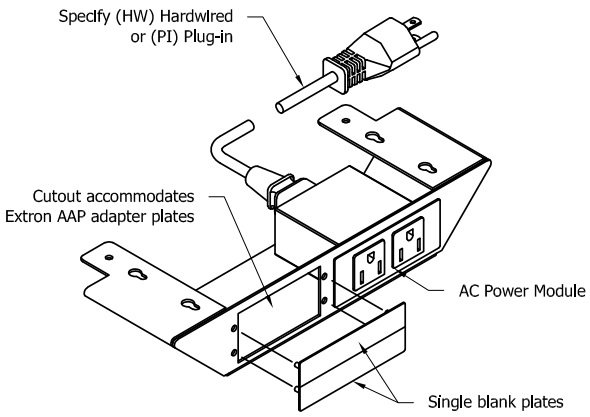


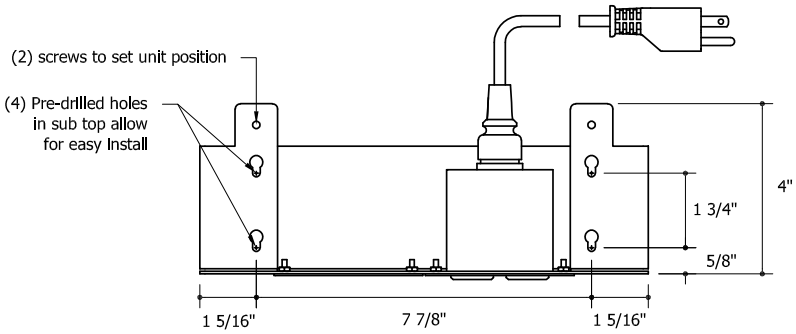


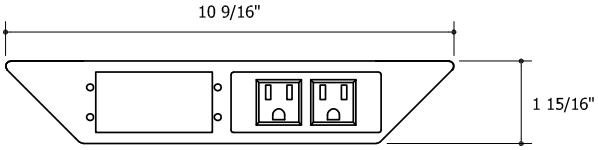


- Black powder coat metallic finish (MC12)
- Provided with 1 AC power module - specify hardwired (HW) or plug in (PI), and 2 single space blank plates
- For additional connectivity replace blank plates with Extron single or double space AAP plates as desired. For more information see extron.com

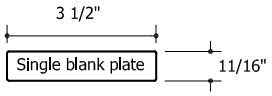


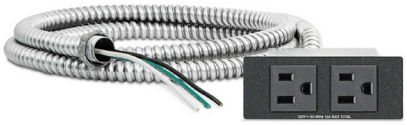

AC Module Hardwired (HW)
- 3/8" diameter x 6' long metal clad cable with 6" pigtail
- Additional knockouts for series wiring
- 12A max per module

AC Module Plug In (PI)
- 7.5' detachable soft cord
- 6A max per module

# Highline Fifty Collection

## Meeting Tables
## Overall Elevations and Clearance

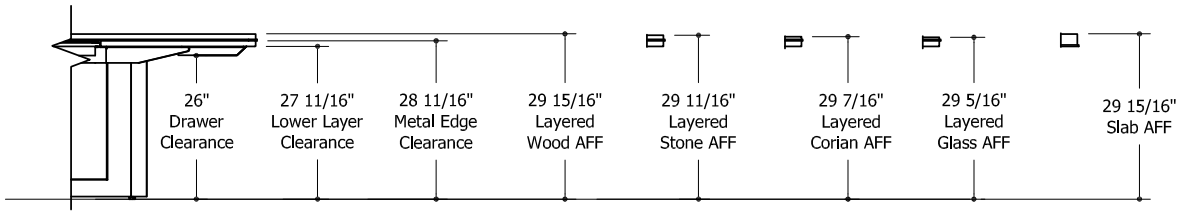


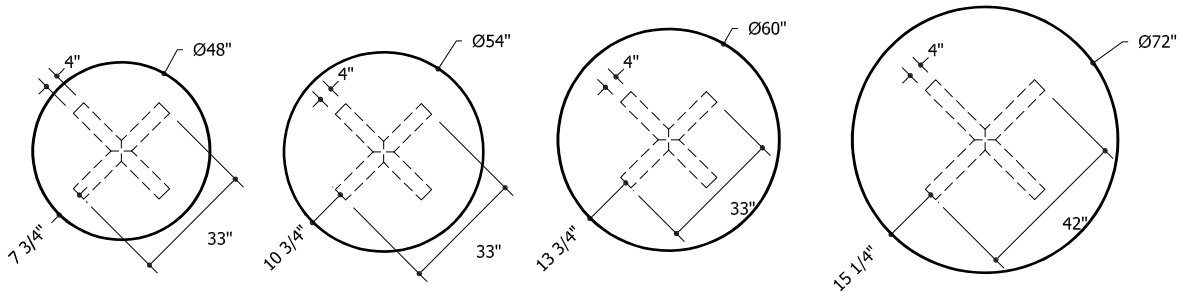


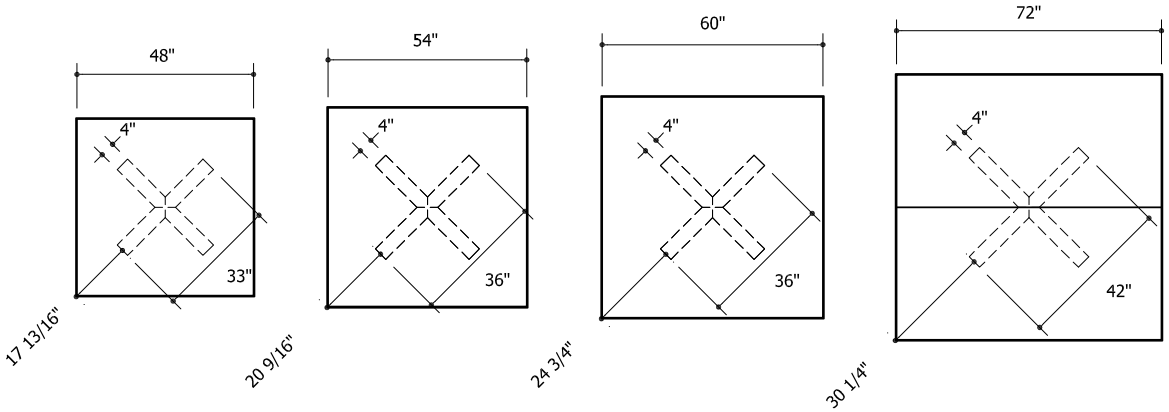

# Highline Fifty Collection

## Meeting Tables
## Base Construction

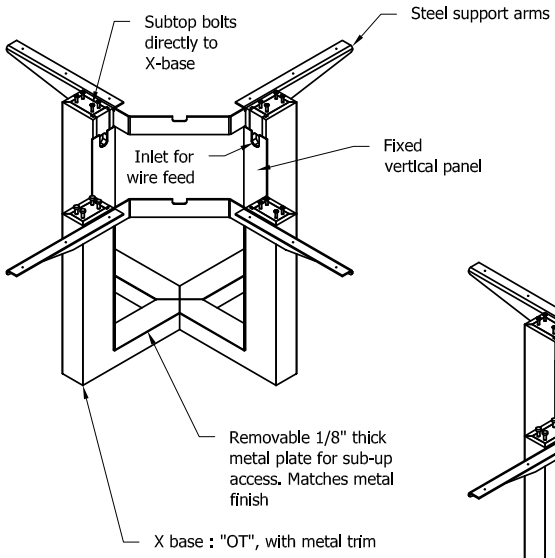


HL03 X base :
33" fits - 48" Round
- 48" Square
- 54" Round

36" fits - 54" Square
- 60" Round
- 60" Square

42" fits - 72" Round
- 72" Square

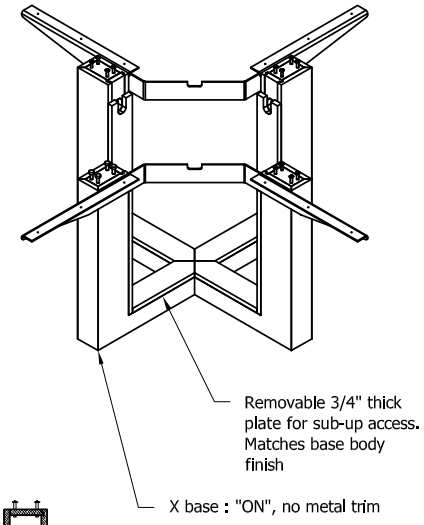


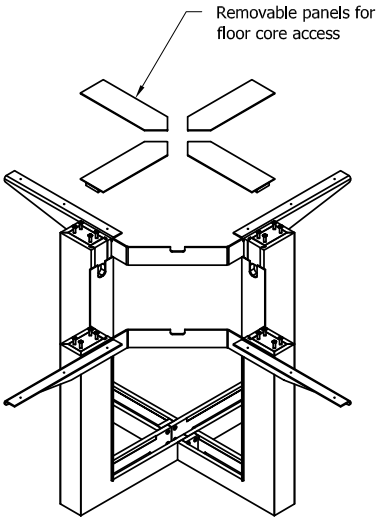


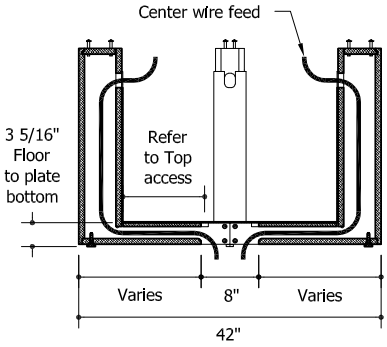


Vertical section at center of Base

Top access:
33" - 2 3/8" x 6 7/8"
36" - 2 3/8" x 8 3/8"
42" - 2 3/8" x 11 3/8"

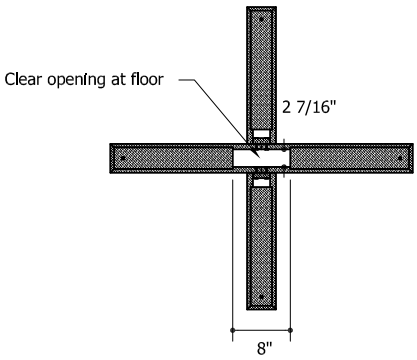


Horizontal section of typical base

# Highline Fifty Collection

## Meeting Tables
## Power & Connectivity
## Drawers

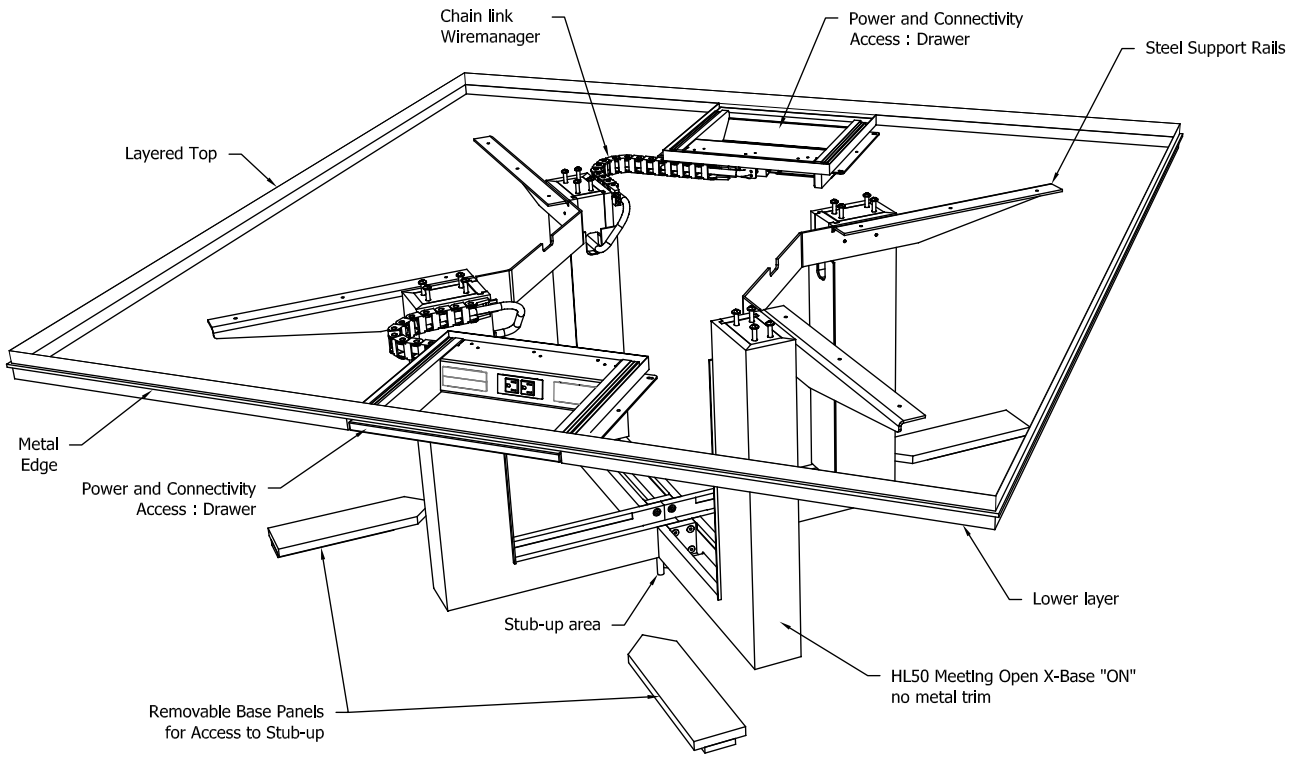

Drawer (shown populated)
- Black powder coat metallic finish (MC12)
- Provided with 1 AC power module - specify hardwired (HW) or plug in (PI), and 2 single space blank plates
- For additional connectivity replace blank plates with Extron single or double space AAP plates as desired. For more information see extron.com

# Highline Fifty Collection

## Meeting Tables
## Power & Connectivity
## Drawers

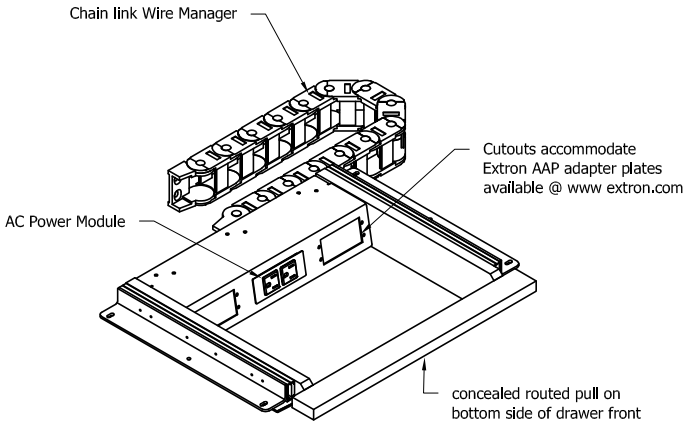


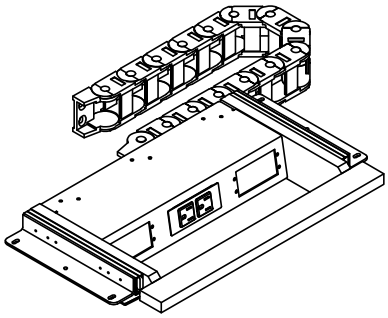

Large Drawer
- 6 1/2" deep x 12 3/4" wide flat storage with 2 1/2" interior height
- 3/8" gap above drawer tor cord exit.
- Concealed routed finger pull under front
- Used at table ends
- Used along the length of 60" / 72" deep tables
- Interior drawer finish: Black powder coat metallic (MC12)
- Drawer front matches lower layer finish
- Provided with 1 AC power module - specify hardwired (HW) or plug in (PI), and 2 single space blank plates

Small Drawer
- 1 7/8" deep x 12 3/4" wide flat storage with 2 1/2" Interior height
- 3/8" gap above drawer for cord exit
- Concealed routed finger pull under front
- Used along the length of 48" / 54" deep tables
- Interior drawer finish: Black powder coat metallic (MC12)
- Drawer front matches lower layer finish
- Provided with 1 AC power module - specify hardwired (HW) or plug in (PI), and 2 single space blank plates

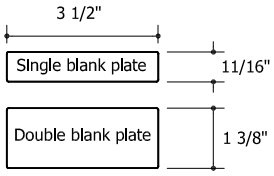


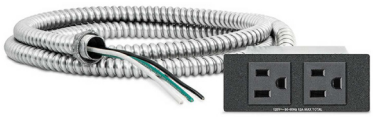

AC Module Hardwired (HW)
- 3/8″ diameter x 6′ long metal clad cable with 6″ pigtail
- Additional knockouts for series wiring
- 12A max per module

AC Module Plug In (PI)
- 7.5′ detachable soft cord
- 6A max per module

# Highline Fifty Collection

## Meeting Tables
## Power & Connectivity
## Table Top

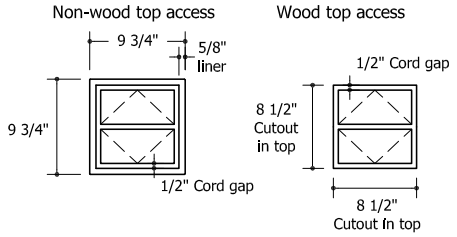


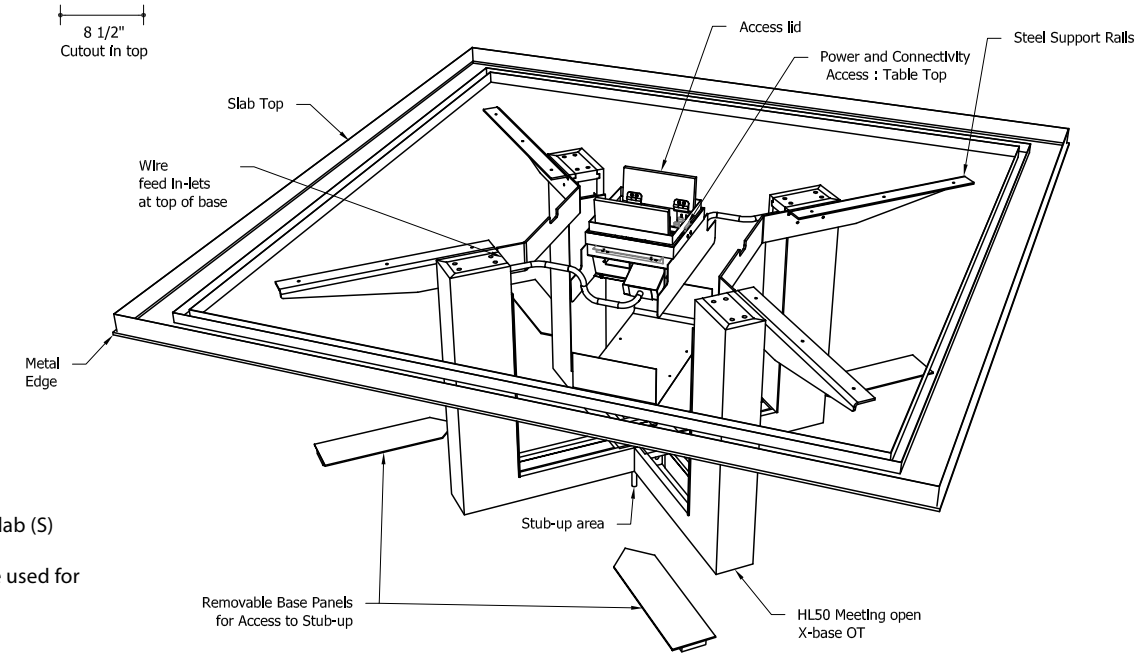


- Wood access lid is used for Slab (S) and Veneer (V) Top Material
- Metal access lid and liner are used for all other Top Materials

Meeting Table Top Access (shown populated)
- Provided with 2 AC power modules - specify hardwired (HW) or plug in (PI), 1 double and 2 single space blank plates
- For additional connectivity replace blank plates with Extron single or double space AAP plates as desired. For more information see extron.com

# Highline Fifty Collection

## Meeting Tables
## Power & Connectivity
## Table Top

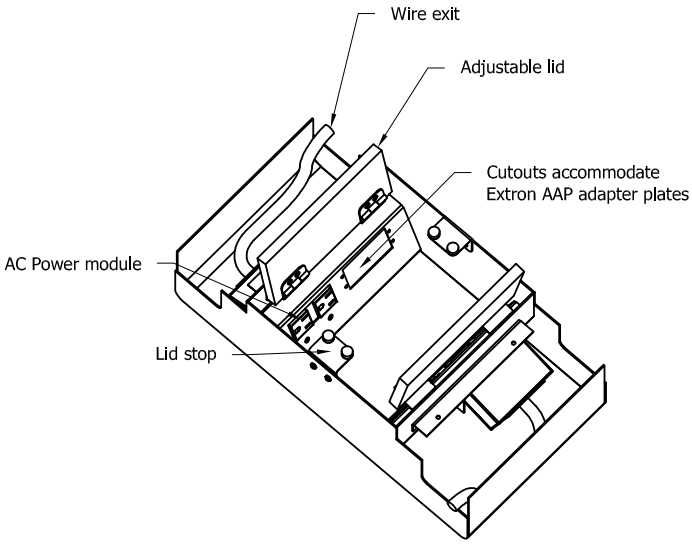


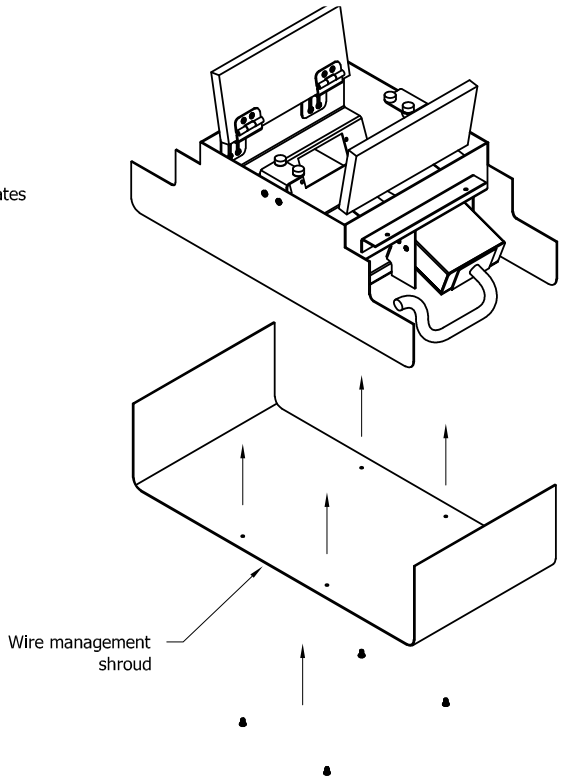


Meeting Table Top access
- Provided with 2 AC power modules-specify hardwired (HW) or plug in (PI), 1 double and 2 single space blank plates
- For additional connectivity replace blank plates with Extron single or double space AAP plates as desired. For more information see extron.com

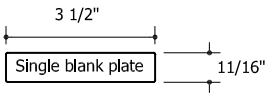


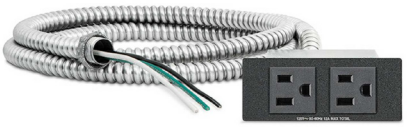

AC Module Hardwired (HW)
- 3/8″ diameter x 6′ long metal clad cable with 6″ pigtail
- Additional knockouts for series wiring
- 12A max per module

AC Module Plug In (PI)
- 7.5′ detachable soft cord
- 6A max per module

# Highline Fifty Collection

## Meeting Tables
## Power & Connectivity
## Undermount

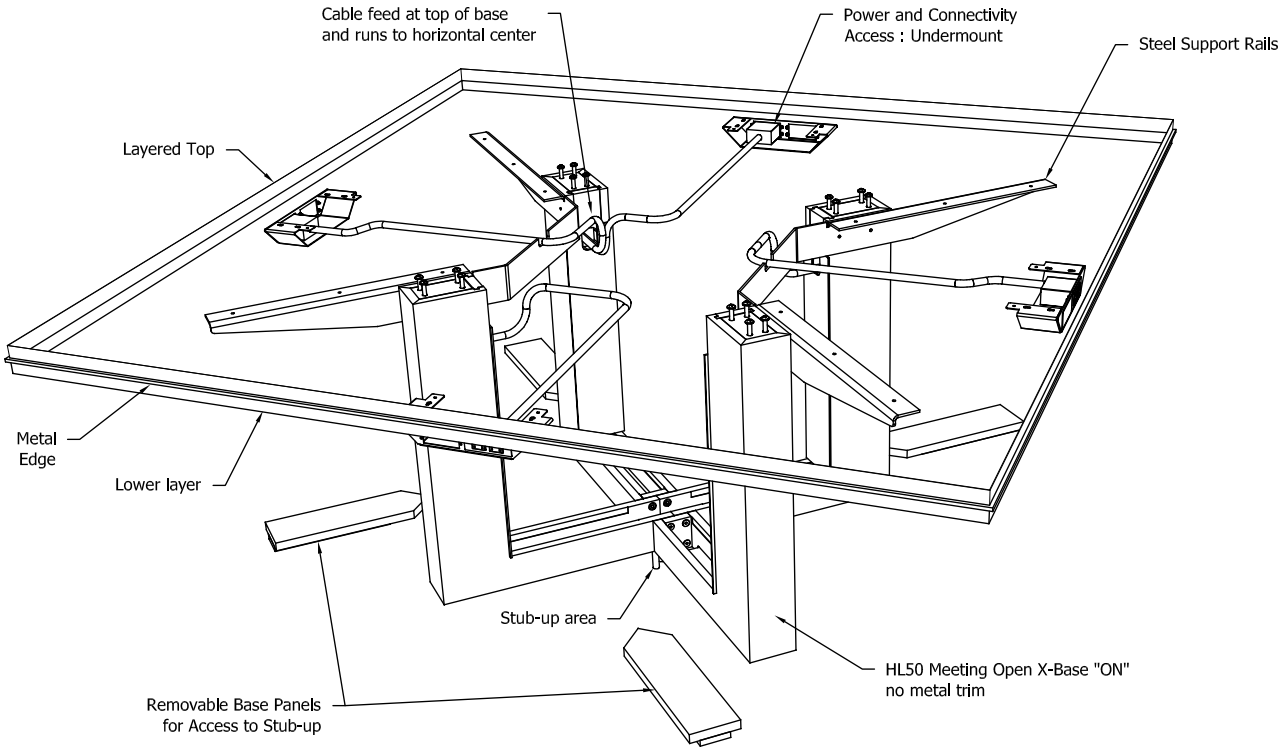


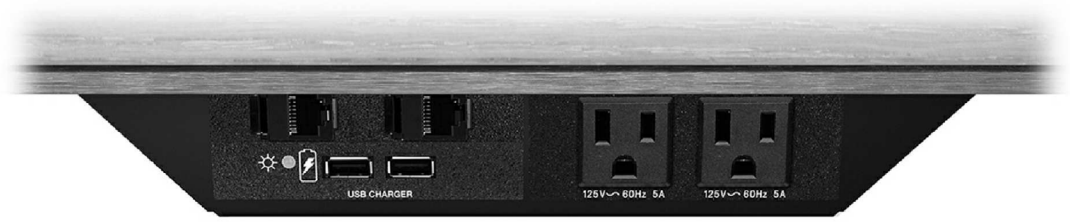


Undermount access (shown populated)
- Black powder coat metallic finish (MC12)
- Provided with 1 AC power module - specify hardwired (HW) or plug in (PI), and 2 single space blank plates
- For additional connectivity replace blank plates with Extron single or double space AAP plates as desired. For more information see extron.com

# Highline Fifty Collection

## Meeting Tables
## Power & Connectivity
## Undermount

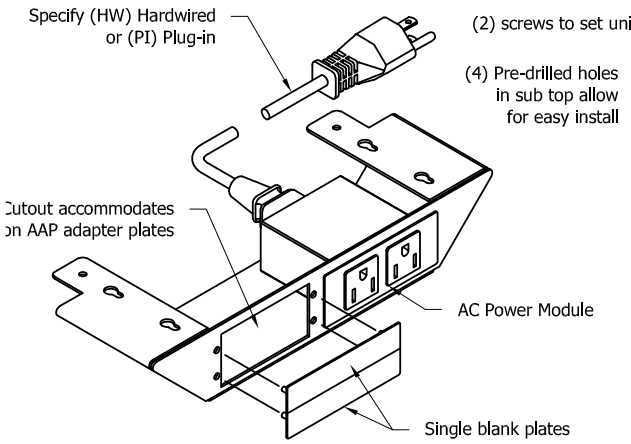


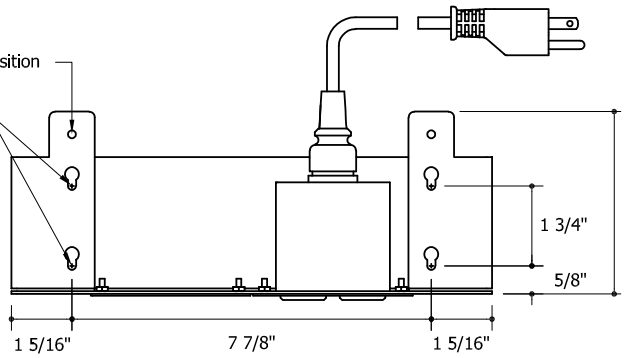


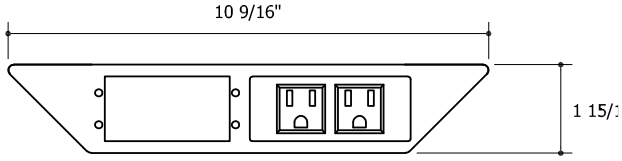


- Black powder coat metallic finish (MC12)
- Provided with 1 AC power module - specify hardwired (HW) or plug in (PI), and 2 single space blank plates
- For additional connectivity replace blank plates with Extron single or double space AAP plates as desired. For more information see extron.com

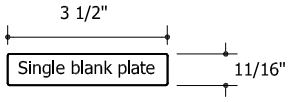


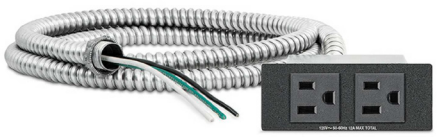

AC Module Hardwired (HW)
- 3/8″ diameter x 6′ long metal clad cable with 6″ pigtail
- Additional knockouts for series wiring
- 12A max per module

AC Module Plug In (PI)
- 7.5′ detachable soft cord
- 6A max per module

# Highline Fifty Collection

## Credenzas
## Elevations and Optional Tops

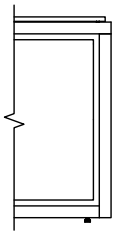

Optional Top
3/4" Caesarstone

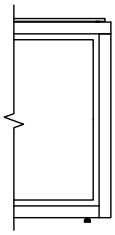

Optional Top
1/2" Corian

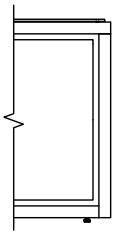

Optional Top
3/8" Glass

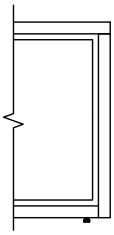

Optional Top
None

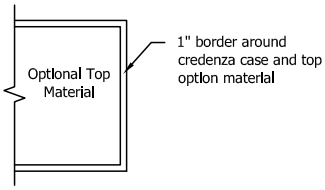


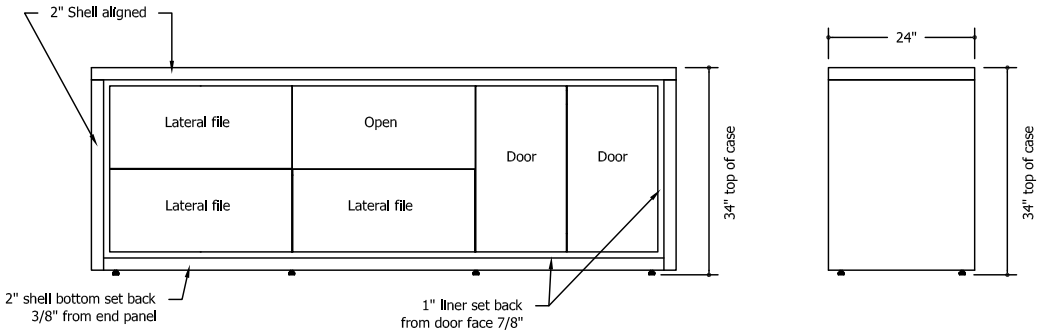


Buffet Height Credenza

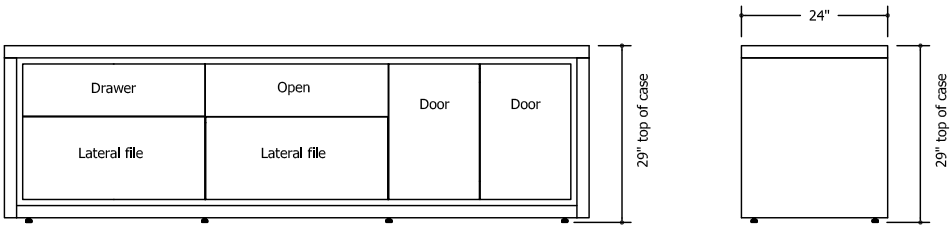


Conference Height Credenza

# Highline Fifty Collection

## Credenzas
## Case Details

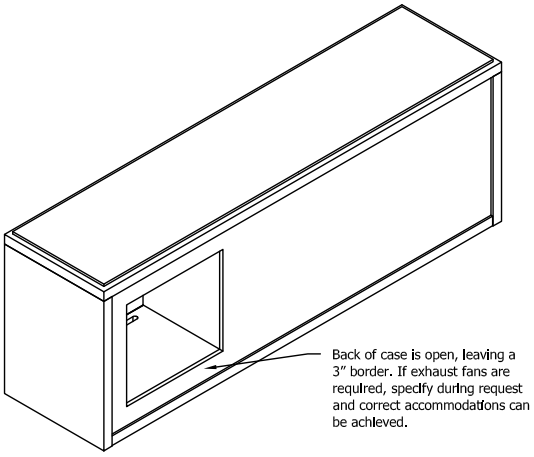


Back of Credenza

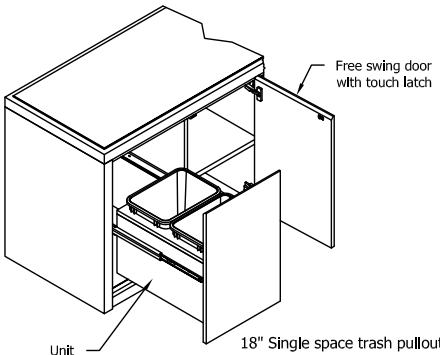


18" Single space trash pullout
- (2) 8.75 gallon receptacles
- Front to back orientation
- Containers are black plastic

36" Double space trash pullout
-(4) 8.75 gallon receptacles
-Front to back orientation
-Containers are black plastic

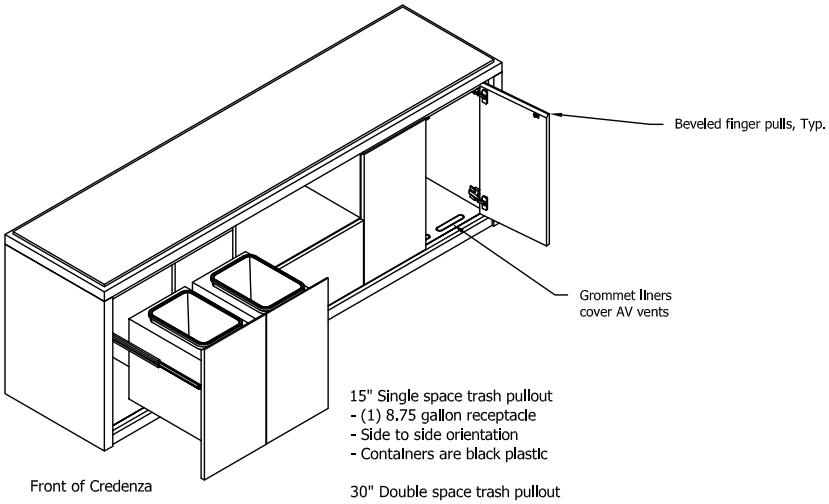


Front of Credenza

15" Single space trash pullout
- (1) 8.75 gallon receptacle
- Side to side orientation
- Containers are black plastic

30" Double space trash pullout
- (2) 8.75 gallon receptacles
- Side to side orientation
- Containers are black plastic

Credenza Notes
- Pulls are 45 degrees inside bevel
- All drawers have a beveled pull on back edge of each front
- Top drawer has bevel on top edge, bottom drawer has bevel at bottom edge
- All drawers are equipped with full extension slides
- All doors are equipped with self-closing hinges
- All credenza top material options are secured to the case with silicone except full clear glass (FG GC00)
- Full clear glass (FG GC00) sets on top of 1/16" bumpers located on top of case
- Trash option Is pull-out only

Audio Visual Requirements:
- Coordinate AV requirements with the interior clearance dimensions provided below to ensure fit. All AV cases have air vent grommet at the bottom front and an open back w3" border. Consult with your AV contractor for specific component requirements. Custom solutions are available on request

- Conference height 30" Bay:
  25.75" width x 19" depth x 21.5" height
- Buffet height 30" Bay:
  25.75" width x 19" depth x 26.5" height

- Conference height 36" Bay:
  31.75" width x 19" depth x 21.5" height
- Buffet height 36" bay:
  31.75" width x 19" depth x 26.5" height

# Highline Fifty Collection

## Credenzas
## Conference Height: 29"
## Configurations: 15" and 30" modules

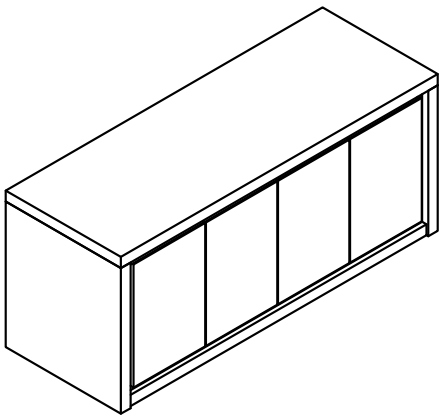

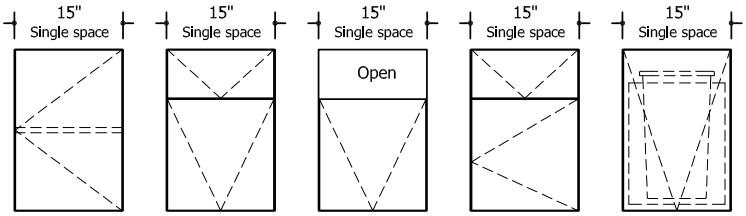


DR15C
(Door w/adj. shelf)

DF15C
(1 Drawer over 1 file)

OF15C
(Open over 1 File)

DD15C
(1 Drawer over 1 Door)

TP15C
(Pullout trash
1 receptacle)

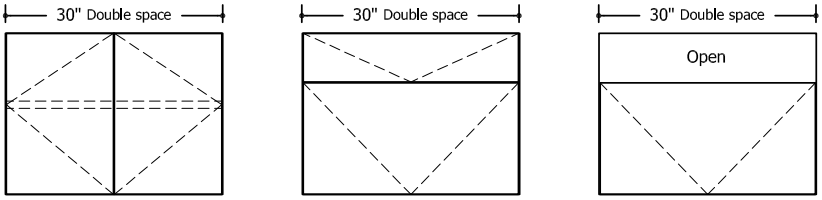


DR30C
(2 Doors w/adj. shelf)

DF30C
(1 Drawer over 1 Lateral file)

OF30C
(Open over 1 Lateral file)

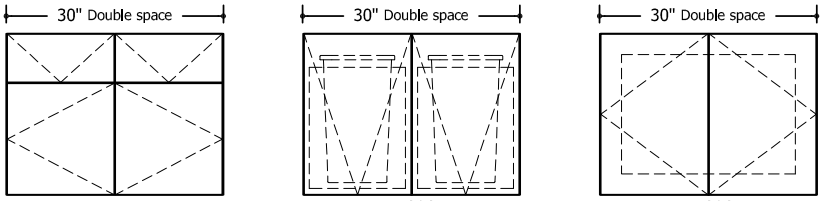


DD30C
(2 Drawers over 2 Doors)

TP30C
(Double pullout trash 2 receptacles)

AV30C
(2 Doors, AV venting large wire access)

# Highline Fifty Collection

## Credenzas
## Buffet Height: 34"
## Configurations: 15" and 30" modules

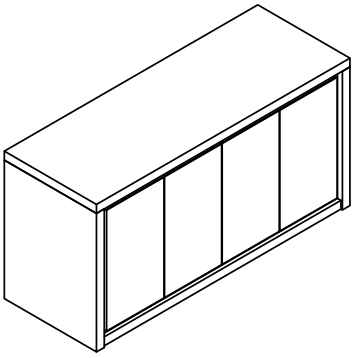

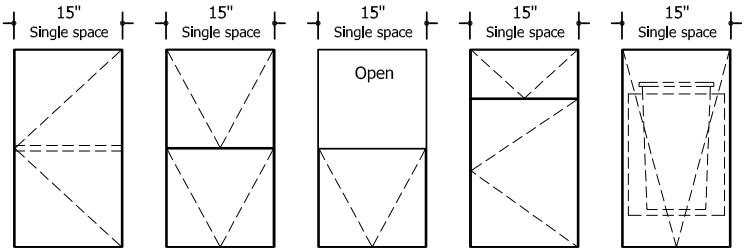


DR15B (Door w/adj. shelf) | FF15B (1 Drawer over 1 file) | OF15B (Open over 1 File) | DD15B (1 Drawer over 1 Door) | TP15B (Pullout trash 1 receptacle)

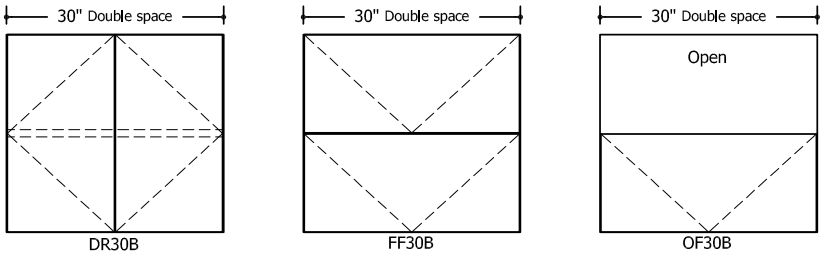


DR30B (2 Doors w/adj. shelf) | FF30B (1 Lateral over 1 Lateral file) | OF30B (Open over 1 Lateral file)

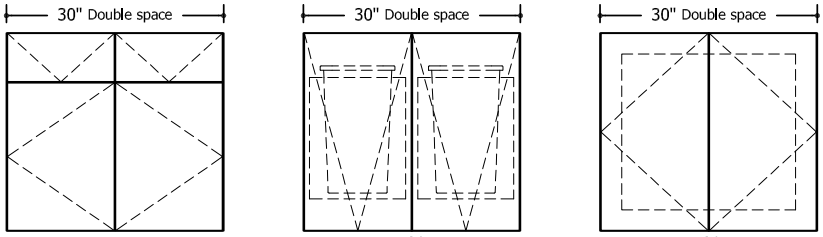


DD30B (2 Drawers over 2 Doors) | TP30B (Double pullout trash 2 receptacles) | AV30B (2 Doors, AV venting large wire access)

# Highline Fifty Collection

## Credenzas
## Conference Height: 29"
## Configurations: 18" and 36" modules

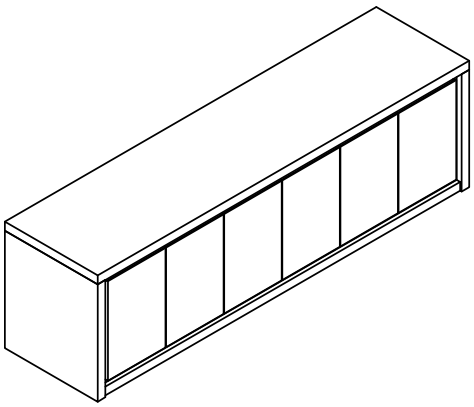

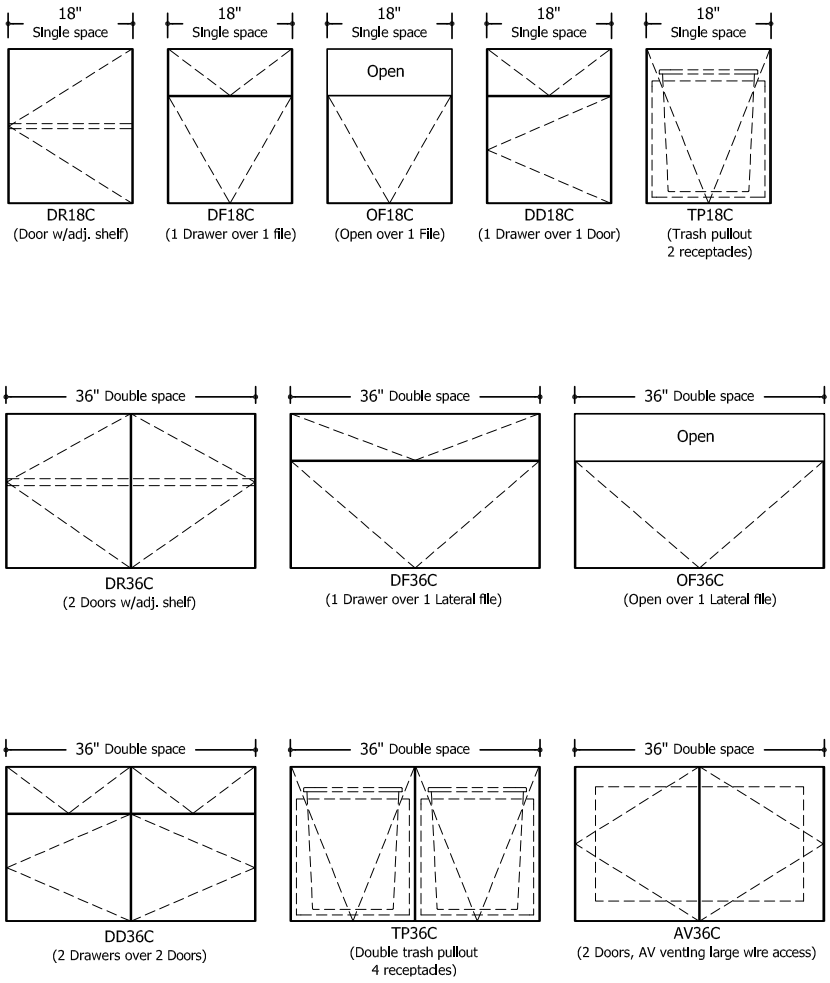

# Highline Fifty Collection

## Credenzas
## Buffet Height: 34"
## Configurations: 18" and 36" modules

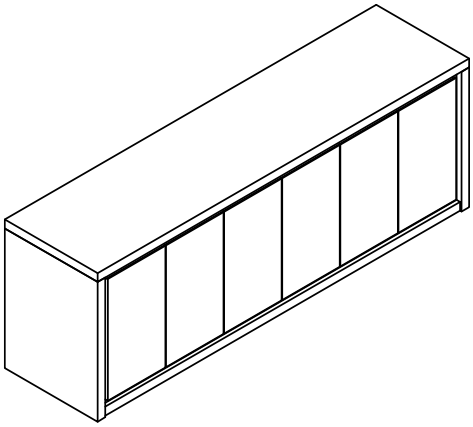

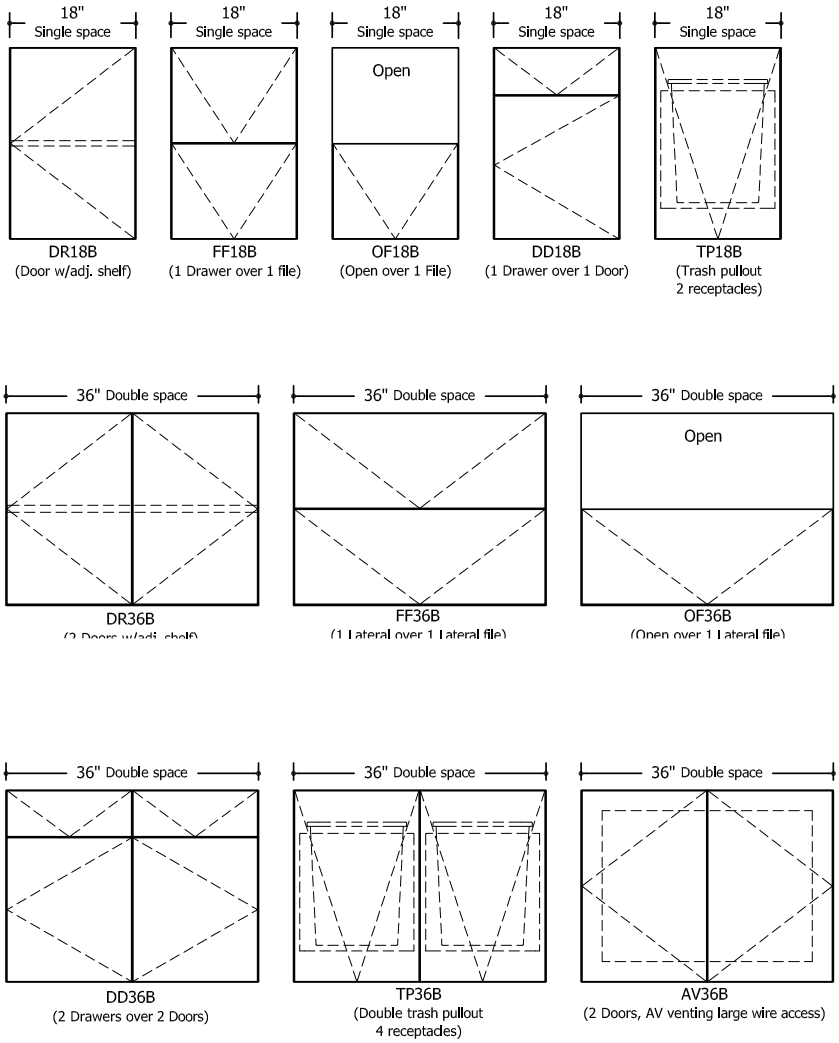

# Highline Twenty-Five Collection

## Credenzas
## Elevations and Optional Tops

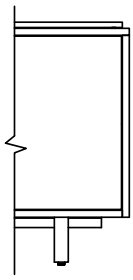

Optional Top
3/4" Caesarstone

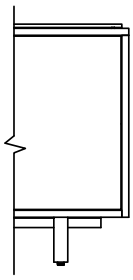

Optional Top
1/2" Corian

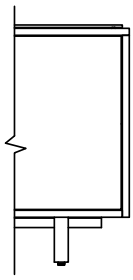

Optional Top
3/8" Glass

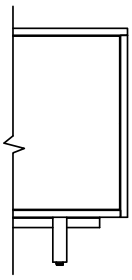

Optional Top
None

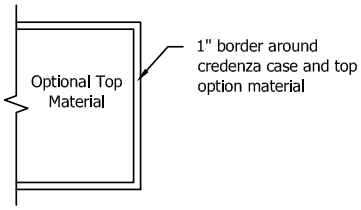


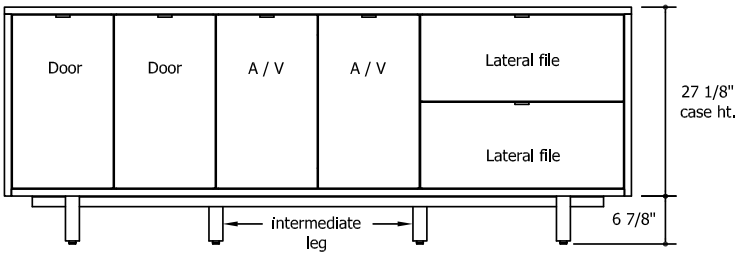


Buffet Height Credenza

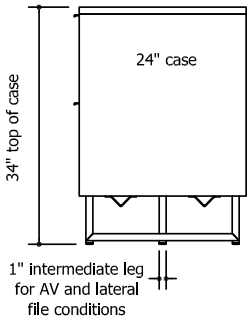


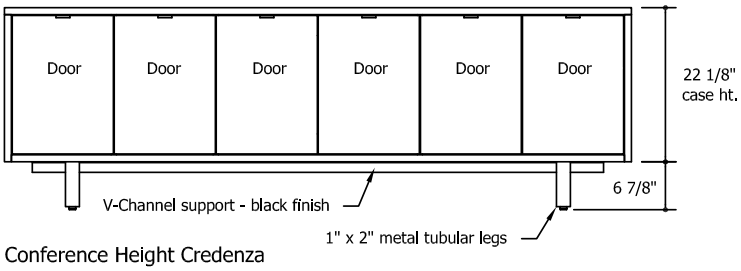


Conference Height Credenza

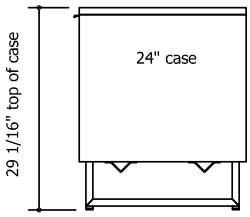

# Highline Twenty-Five Collection

## Credenza
## Case Details

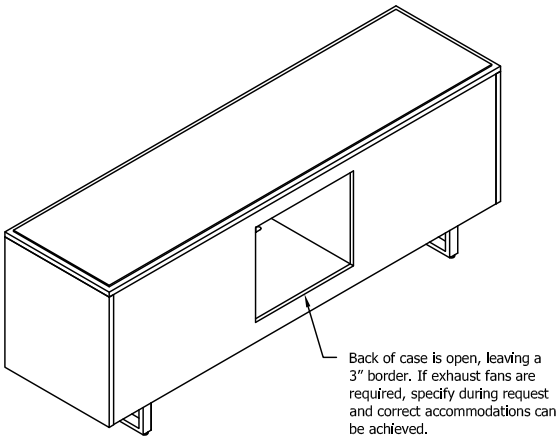


Back of Credenza

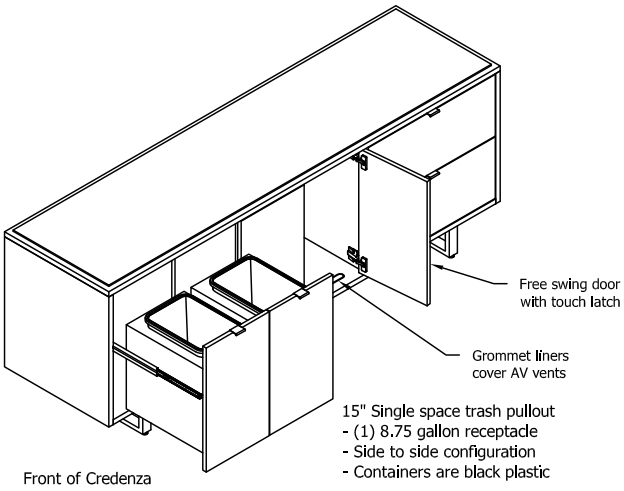


Front of Credenza

15" Single space trash pullout
- (1) 8.75 gallon receptacle
- Side to side configuration
- Containers are black plastic

30" Double space trash pullout
- (2) 8.75 gallon receptacles
- Side to side configuration
- Containers are black plastic

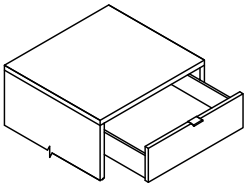

Drawer with 2" tab pull

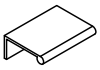

2" tab pull

Credenza Notes:
- 2" metal pulls to compliment metal legs
- All drawers have a 2" tab pull that Is located in the center of the top edge of each front
- All drawers use full extension slides
- All doors use free swing hinges and touch latches.
- All credenza top material options are secured to the case with silicone except full clear glass (FG GC00)
- Full clear glass (FG CG00) sets on top of 1/16" bumpers located on top of case
- Trash option is pull-out only

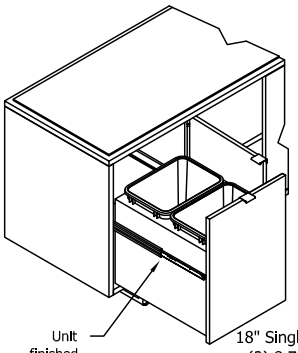


18" Single space trash pullout
- (2) 8.75 gallon receptacles
- Front to back orientation
- Containers are black plastic

36" Double space trash pullout
- (4) 8.75 gallon receptacles
- Front to back orientation
- Containers are black plastic

Audio Visual Requirements:
- Coordinate AV requirements with the interior clearance dimensions provided below to ensure fit. All AV cases have air vent grommet at the bottom front and an open back width 3" border. Consult with your AV contractor for specific component requirements. Custom solutions are available on request

- Conference height 30" Bay:
  25.15" width x 21.25" depth x 19.18" height

- Buffet height 30" Bay:
  25.15" width x 21.25" depth x 24.18" height

- Conference height 36" Bay:
  31.13" width x 21.25"depth x 19.18" height

- Buffet height 36" Bay:
  31.13" width x 21.25" depth x 24.18" height

# Highline Twenty-Five Collection

## Credenzas
## Conference Height: 29"
## Configurations: 15" and 30" modules

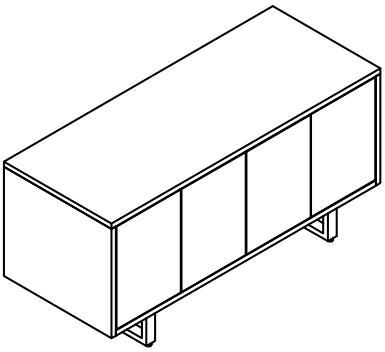

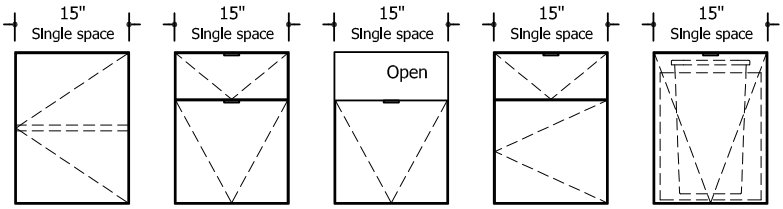


DR15C
(Door w/adj. shelf)

DF15C
(1 Drawer over 1 file)

OF15C
(Open over 1 File)

DD15C
(1 Drawer over 1 Door)

TP15C
(Trash pullout
1 receptacle)

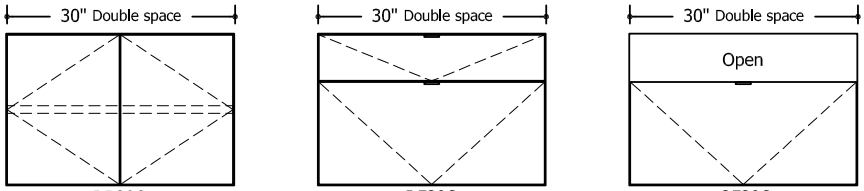


DR30C
(2 Doors w/adj. shelf)

DF30C
(1 Drawer over 1 Lateral file)

OF30C
(Open over 1 Lateral file)

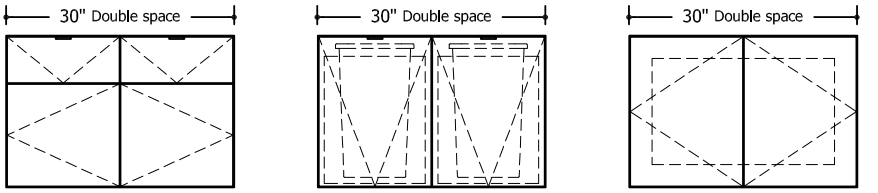


DD30C
(2 Drawers over 2 Doors)

TP30C
(Double trash pullout
2 receptacles)

AV30C
(2 Doors, AV venting large wire access)

# Highline Twenty-Five Collection

## Credenzas
## Buffet Height: 15"
## Configurations: 15" + 30" models

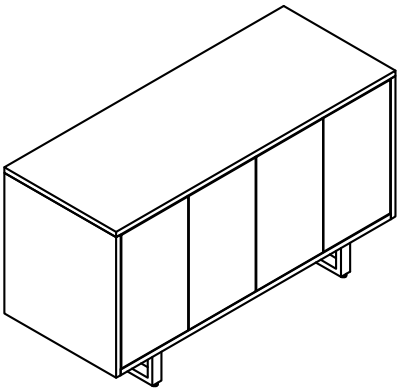

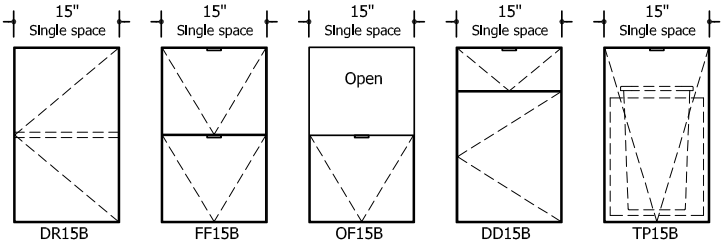


DR15B
(Door w/adj. shelf)

FF15B
(1 Drawer over 1 file)

OF15B
(Open over 1 File)

DD15B
(1 Drawer over 1 Door)

TP15B
(Trash pullout
1 receptacle)

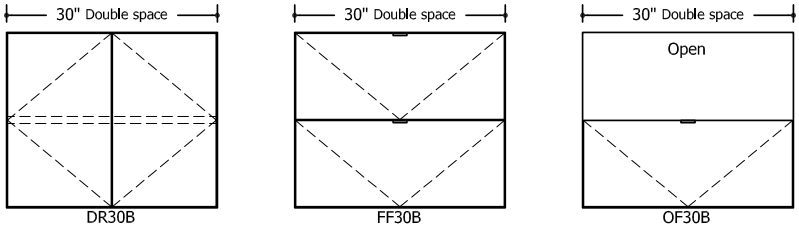


DR30B
(2 Doors w/adj. shelf)

FF30B
(1 Lateral over 1 Lateral file)

OF30B
(Open over 1 Lateral file)

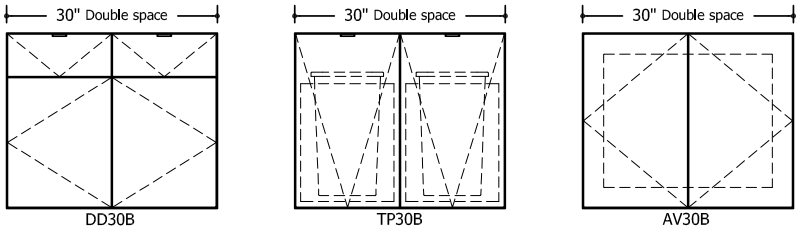


DD30B
(2 Drawers over 2 Doors)

TP30B
(Double trash pullout
2 receptacles)

AV30B
(2 Doors, AV venting large wire access)

# Highline Twenty-Five Collection

## Credenzas
## Conference Height: 29"
## Configurations: 18" and 36" modules

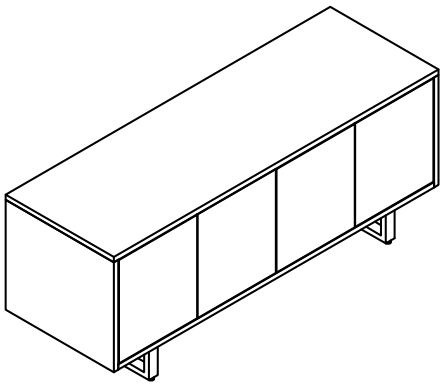

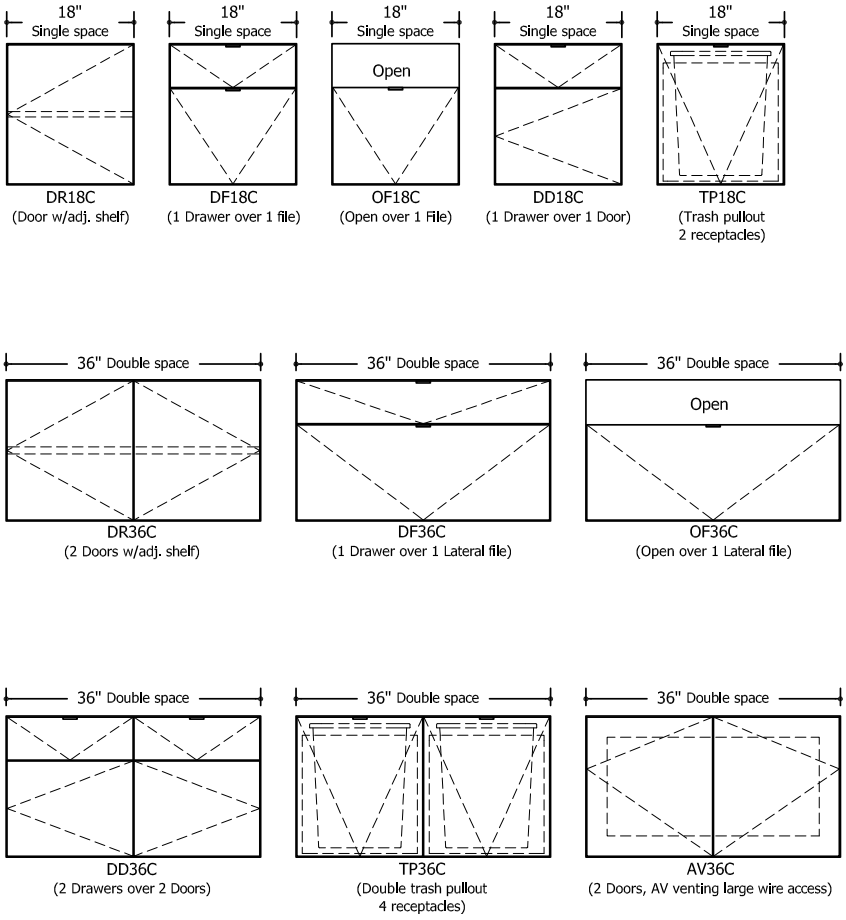

# Highline Twenty-Five Collection

## Credenzas
## Buffet Height: 34"
## Configurations: 18" and 36" modules

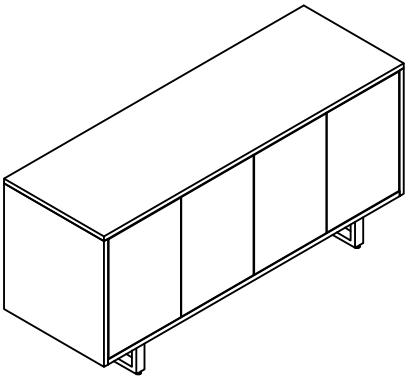

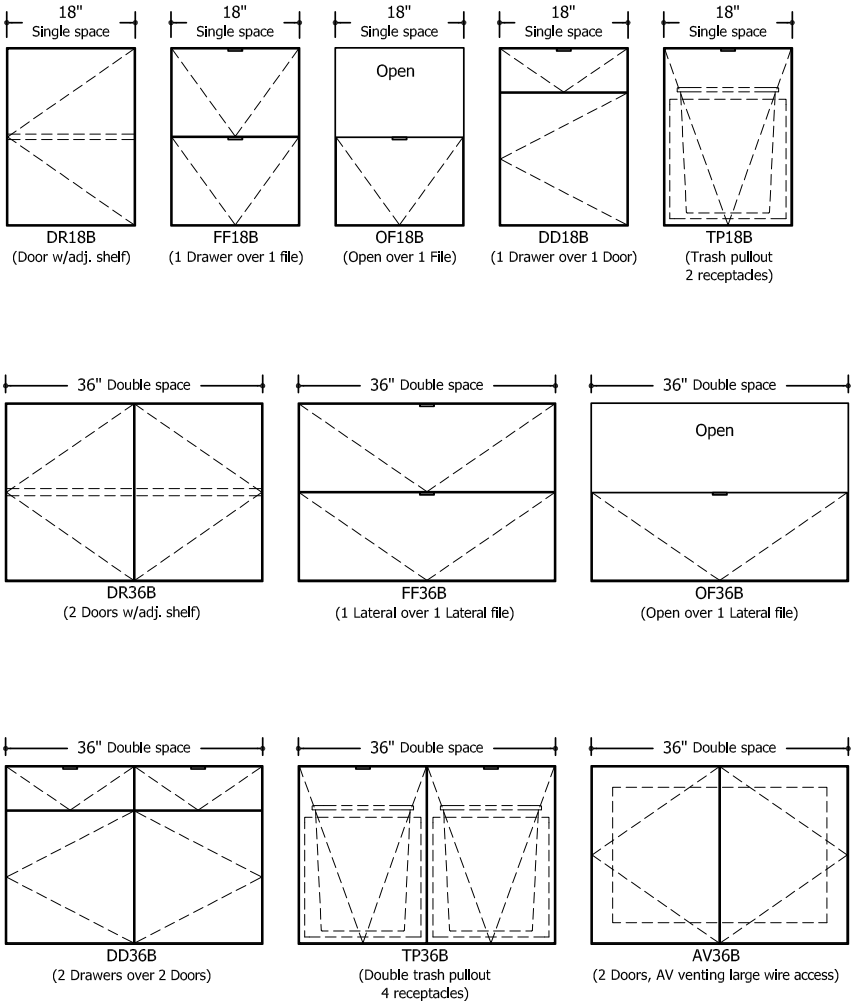

# Accessories

## Power & Connectivity
## Slide Out Power Box

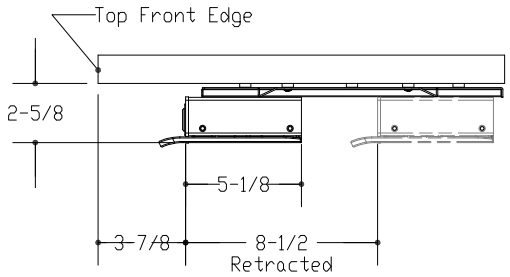


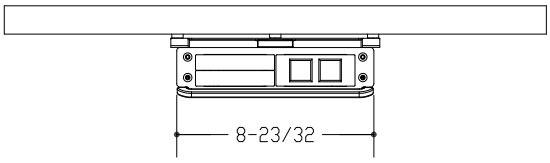


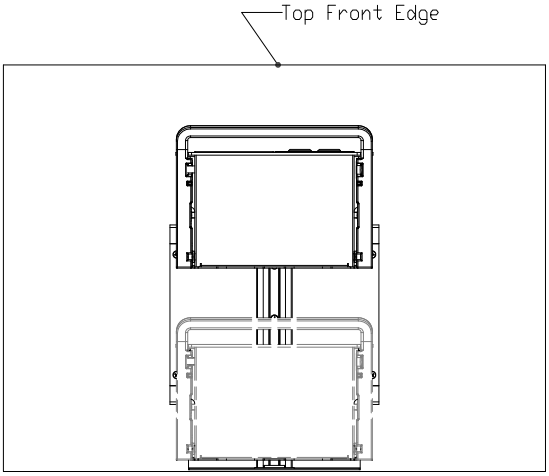


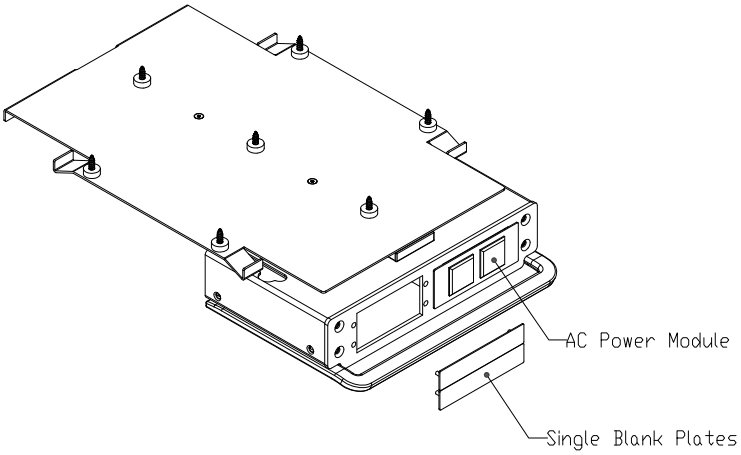


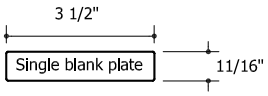


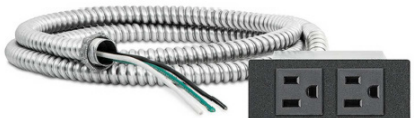

AC Module Hardwired (HW)
- 3/8″ diameter x 6′ long metal-clad cable with 6″ pigtail
- Additional knockouts for series wiring
- 12A max per module

AC
Module Plug In (PI)
- 7.5′ detachable soft cord
- 6A max per module

# Accessories

## Power & Connectivity
## Linkable USB Kits for Power Boxes

Linkable USB kits come in configurations of 4, 6, 8 or 10 module kits accommodating tables ranging up to 240” in length and 72” in depth.

Fits Double AAP Opening (Same as Extron Dual-AC Module 70-584-02) provided in all Tabletop, Undermount, Slide-Out Box and Power Drawer applications.

One power infeed required for every 8 modules.

All components finished black.

Each kit contains everything needed for installation. Including P-Clips for wire management. (Note: Power Boxes and Drawers are specified and ordered separately with table.)

Technical Specifications:

- 2- 1.2A/5VDC USB Charging Ports per Module
- 150W/5VDC or 250W/5VDC Power Supply
- 16 Gage Direct Current Jumper Cables
- USA NEMA 5-15 and 15 Amp with 90° Plug
- UL 1310 Class 2 Listed
- Meets USB.org Battery Charging 1.2 Specifications

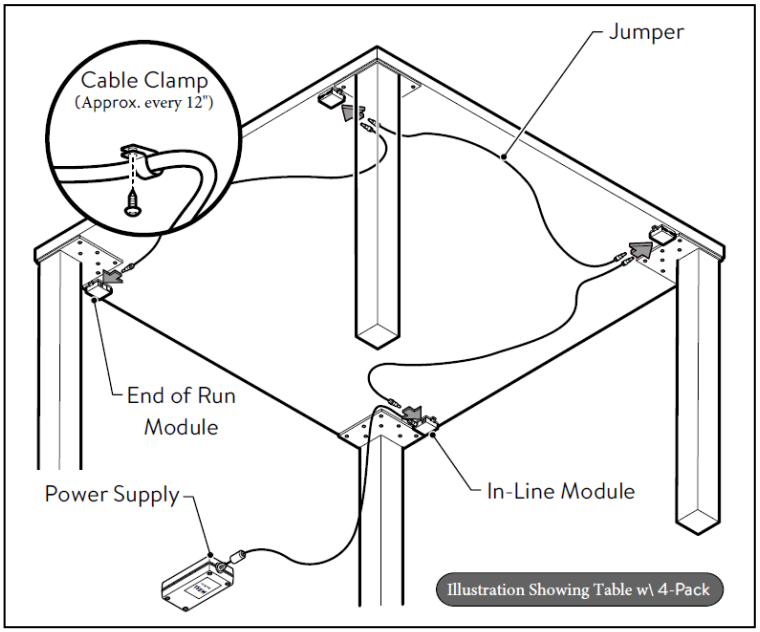


**USB Module Assembly ***
In-Line & End-Of-Line Configurations

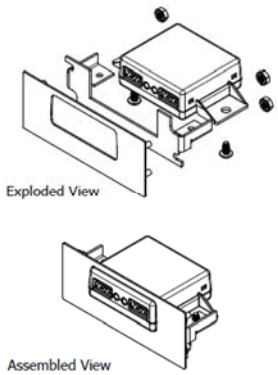


**Power Splitter ***

**Jumper Cable, 72"L**

**Power Supply, 42"L ****

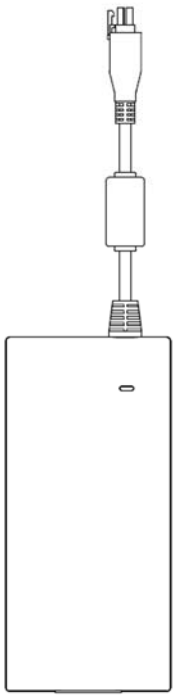

**AC Power Cord, 72"L**

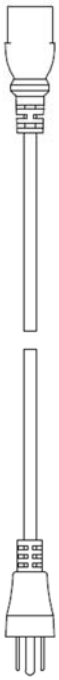

* ONLY INCLUDED ON CERTAIN SIZES
** MAY NOT LOOK EXACTLY AS SHOWN

# Terms and Conditions of Sale

Sales by DatesWeiser (hereinafter called the Seller) are made only on the terms and conditions set forth below. These terms and conditions may be modified or supplemented only by a written document signed by an authorized representative of the Seller. These terms and conditions supersede any prior and/or contemporaneous agreements or correspondence between Purchaser and Seller.

Ordering Information
All orders must be in writing. Product information required for a Purchase Order is described on page 5.

A Purchase Order is not binding on the Seller until Purchaser has received Seller's Order Confirmation.

Pricing Policies
All written quotations expire thirty (30) days from the date of issuance and can be withdrawn by written notice anytime during that period.

Prices are List, F.O.B. from the DatesWeiser factory in Buffalo, New York. Shipping, packaging, inside delivery, uncrating, installation, storage, and sales tax (if applicable) shall be in addition to the list price and shall be itemized and charged separately.

List prices are subject to change without notice.

List prices shall be those prices in effect on the date the Seller receives a completed Purchase Order unless shipment is requested more than 120 days after the order entry, in which case prices in effect on the date of shipment apply.

Taxes
All sales, use, excise, and other taxes applicable to the sale of DatesWeiser Products shall be paid by the Purchaser. To claim an exemption from any tax, Purchaser must submit to Seller the appropriate exemption certificates.

Terms of Payment
A fifty percent (50%) deposit is due at the time of order placement and the remainder due within thirty (30) days of the date of invoice.

If, in the judgment of Seller, Purchaser's financial condition does not justify the terms of the payment, Seller may require full or partial payment in advance.

The ship date the Seller specifies is considered the invoice date for billing. The ship date will be confirmed by the Seller via a separate Acknowledgement issued upon receipt of a signed Purchase Order.

Past due accounts shall be charged one and one-half percent (1.5%) per month, or the highest rate permitted by law, whichever is less, and will be added to the outstanding balance. In the event Purchaser defaults on payment, Purchaser shall be liable for all collection costs, including reasonable attorney's fees and costs.

Changes and Cancellations
A confirmed order may not be changed or cancelled, in whole or in part, without prior written consent of Seller. Changes may effect delivery dates. Expenses incurred because of changes shall be charged to Purchaser. In event of cancellations, Purchaser will be liable for reasonable cancellation charges, including a $500 administrative fee.

Seller is not required to comply with Purchaser's request to change a confirmed order, but all reasonable requests to change confirmed orders will be honored. Orders for special or custom Product may not be cancelled.

To be effective, a Change Order must be in writing, signed by the Purchaser or Purchaser's agent, and confirmed in writing by the Seller. Change Orders are subject to a charge for materials, labor, and other costs as determined by Seller.

Security Interest
Until Seller receives the full payment for the Product, Seller shall have a security interest in the Product. Purchaser agrees to perform all acts, including but not limited to the execution and filing of documentation, which may be necessary to perfect and assure the security interest of Seller.

Customer's Own Material (COM)
A Purchaser who requests a material not standard to Seller's line of Products (described on page 6) must submit a sample of the requested material to Seller prior to entry of a purchase order. Seller shall determine if the material is suitable to its manufacturing processes and meets any requirements of Underwriter Laboratories. If the COM is acceptable, Seller will then establish a price for using the COM on the Product in question.

Customer's Specified Laminates (CSL)
For custom wood or paint finishes add $725 net per finish. This is a one-time matching charge. Custom finishes may extend delivery time up to four (4) weeks. Control samples of custom finishes will be provided.

Hardware
Final adjustment of furniture hardware such as hinges, drawer slides, drawer pulls, etc., at the installation and as a punch-list item, if required, is the Purchaser's responsibility.

Design
All Products shown in the Seller's Price List and Specifications Guide are, and remain, the property of the Seller, who reserves the exclusive right to manufacture them. All dimensions shown are to be considered approximate. Seller reserves the right to make changes in price, dimensions, design and/or construction without prior notice.

Shop Drawings
Seller allows for one (1) set of full shop drawings and one (1) round of minor drawing revisions in its pricing and scheduling. Thereafter, any significant changes in design, including dimensions, engineering details, and materials, or delays in reviewing and approving shop drawings, may necessitate additional charges and cause schedule delays. Seller reserves the right to determine the impact of any design changes and/or delays and will promptly notify those involved of any adjustments to cost and schedule.

Field and Hold Dimensions
If a dealer or third party is responsible for providing installation, the following is required: Full responsibility for providing accurate and timely field dimensions or hold to dimensions (in cases where walls are not erected) as it effects the ultimate fit of the installation. As an alternative, upon request, Seller can provide a cost for sending a field technician to the project site to assume responsibility for field dimensions and site evaluation.

## FREIGHT AND DELIVERY

Products are carefully inspected and packaged before leaving the factory to ensure they reach their destination in excellent condition. Whenever possible, the Seller will ship in accordance with the Purchaser's instructions. If Purchaser does not specify shipping instructions, Seller will use its best judgment to determine the most suitable shipping method, route, and carrier.

Conditions beyond the control of Seller, including weather, available facilities and traffic conditions, may affect time of delivery.

Storage
If the Purchaser cannot accept delivery per the ship date specified in the Seller's Acknowledgement, the Seller may transfer the merchandise to storage, either at its facility or at another facility. Purchaser will be charged a storage fee of two percent (2%) of the invoice for every thirty (30) days the products are stored at the Seller's facility.

For products stored in another facility, all out-of-pocket costs of storage, including transportation and warehousing fees, will be at the Purchaser's expense.

The Purchaser will be invoiced for all product charges on the date the Products are transferred to storage. Storage fees will accrue monthly in full month increments (they are not prorated for partial months) and will be added to the first invoice, which will also include non-product charges such as shipping, installation, etc.

Returns
Purchasers may not return Products without Seller's written approval and shipping instructions. Unauthorized returns, and returns shipped inconsistently with Seller's instructions, will be automatically refused by the Seller's receiving department.

Products not currently offered for sale by Seller, including special and custom Products, shall not be authorized for return. All returned Products must be unused, in original condition and in original Seller shipping cartons. No refund or credit shall be given for damaged Products.

## CLAIMS

All shipments for Sellers Product are F.O.B. Origin. All risk of loss passes to Purchaser at time of delivery to carrier. Purchaser shall inspect all Products upon receipt and note any damage on the Bill of Lading and make an immediate request for inspection of damage by carrier. Seller is not responsible for damage that occurs in transit or storage.

Damage that becomes apparent after the Product is unpacked should be reported to the carrier and the Seller within twenty -four (24) hours of receipt. Damage that is incurred at a furniture dealer's warehouse is the responsibility of the furniture dealer.

For claims relating to Product damaged in transit, or for any other claims relating to or arising out of the transportation of the Product, Purchaser must seek recovery from the carrier. Seller may, upon request, assist Purchaser with filing of such claims with the carrier.

Claims for defects, errors, or shortages must be made in writing by Purchaser against Seller within 72 hours after delivery. Failure to make such claim within 72 hours shall constitute unconditional acceptance of the Products and a waiver of any apparent defects, errors, or shortages.

## WARRANTY

Seller warrants its Products to the original Purchaser to be free of defects in workmanship and materials under normal use and under conditions for which the Product was designed for a period of five (5) years. This remedy is exclusive. Seller does not authorize any person to create for it any obligation or liability.

During this warranty period, Seller will repair, or at its option, replace, such Product proven to be defective. Seller shall not be liable for commercial loss or any consequential or incidental damages that may arise as a result of defective Product.
This limited warranty does not apply to:

- Damage caused by a carrier other than the Seller.
- Product not properly maintained per Seller instructions. Maintenance and proper environmental conditions are described in Sellers's Published Price List. All furniture should be used in a stable, controlled atmosphere and positioned to avoid direct sunlight. Ideal climate is 65 to 75 degrees Fahrenheit with 30 to 55% relative humidity.
- Normal wear and tear or acts or omissions of parties other than Seller. This warranty does not cover any product repaired or altered by any person not so authorized by Seller, including user modification, improper use or installation of Products.
- Customer's Own Material and Customer's Specified Laminates.
- Durability or suitability of any exterior surface coatings or treatments.
- Matching of color, grains or texture except as specified in the Seller's Order Confirmation and the finish sample.
- Natural variations occurring in wood, stone, and glass shall not be considered defects, and the Seller does not guarantee the colorfastness or matching of colors, grains or textures, or surface hardness of such materials.
- Adequacy of any electronic components.
- Durability of glass used in Product.
- Live Edge natural slabs used for table tops.

Seller must be notified within 72 hours of receipt of shipment for any initial claims for defects, errors or shortages.

To obtain the benefit of this warranty, contact Seller in writing. It is the responsibility of the Purchaser to arrange the return of Product to Seller and to assume all costs relating to any incidental or consequential damages.

Disclaimers
THE EXPRESS WARRANTIES CONTAINED IN THIS SELLING POLICY ARE THE ONLY WARRANTIES THAT DATESWEISER MAKES AND TAKE THE PLACE OF ALL OTHER WARRANTIES, EXPRESS OR IMPLIED, INCLUDING ANY WARRANTIES OF MERCHANTABILITY OR FITNESS FOR PARTICULAR PURPOSE AND ALL OTHER WARRANTIES ARISING FROM COURSE OF DEALING OR USAGE OF TRADE.

Corporate Office / Factory
1700 Broadway Street
Buffalo, NY 14212
p 716.891.1700

DATESWEISER

datesweiser.com