Technical Information

DATESWEISER

Highline Collection

Conference Tables
Overall Elevations and Clearance

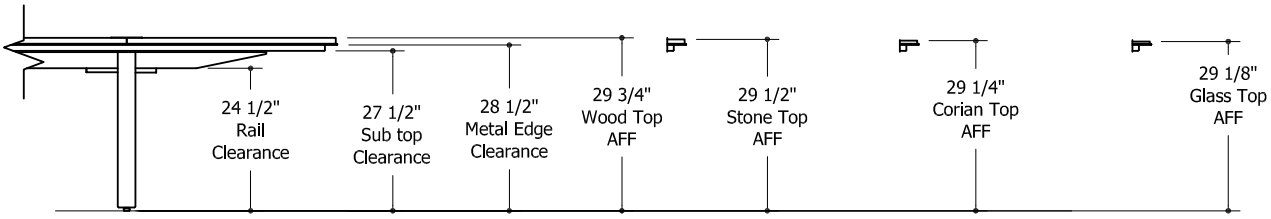

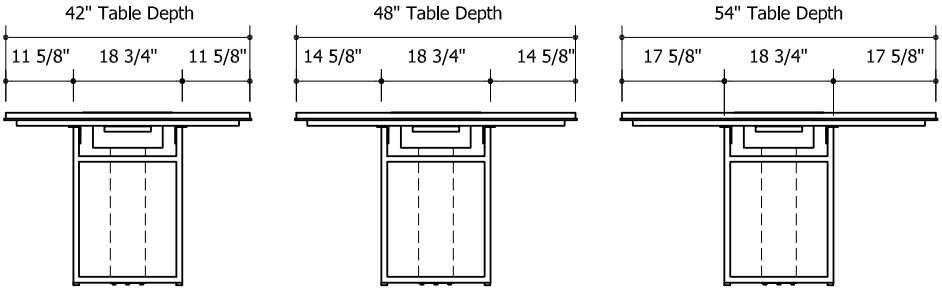

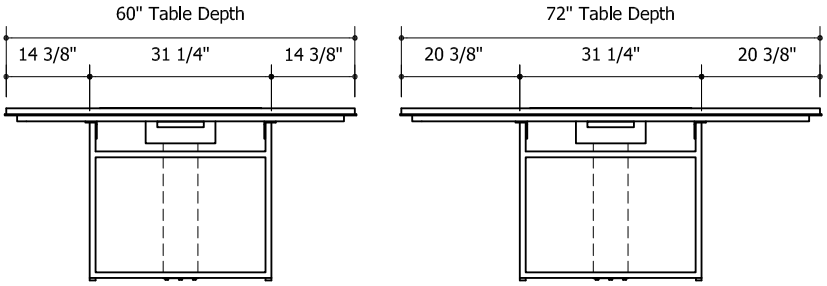

Highline Collection

Conference Tables
Top Construction

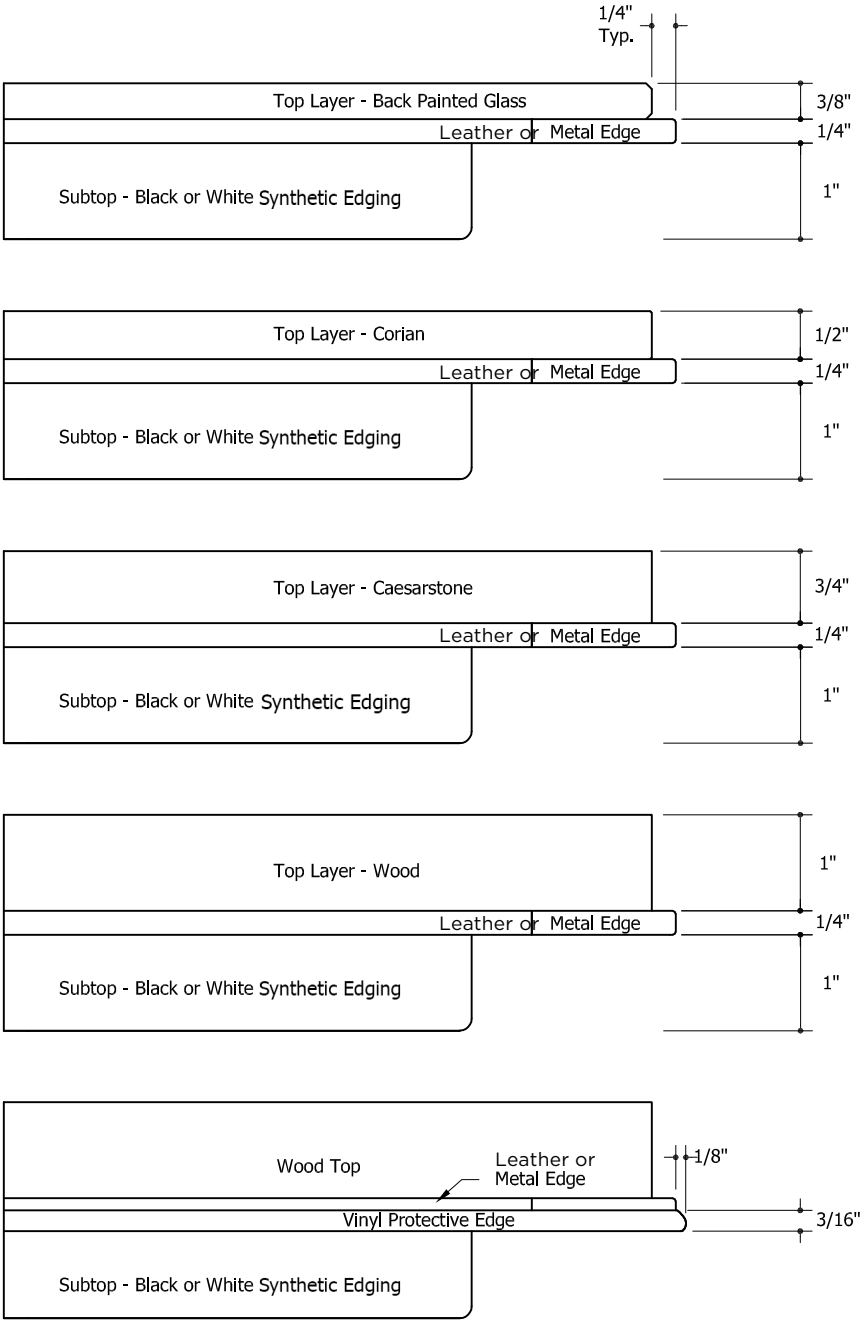

Highline Collection

Conference Tables
Base Construction / Wire Management Column

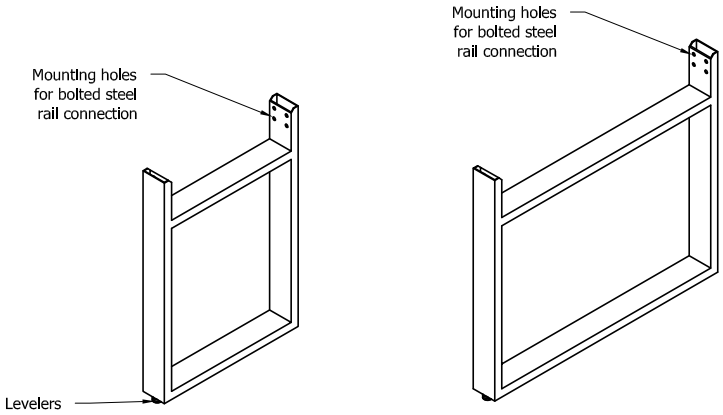

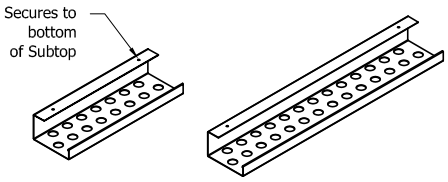

Highline Small Base
- Used on 42” / 48” / 54” widths
- Also used in combination with large bases for some elliptical and trapezoid configurations
- Construction: 1” x 3” tubular steel

Highline Large Base
- Used on 60” / 72” widths
- Also used in combination with small bases for some elliptical and trapezoid configurations
- Construction: 1” x 3” tubular steel

Wire Manager
- Length varies by table 16” or 28” x 5” deep x 3” high
- Construction: Steel with black powder coat metallic finish (MC12)

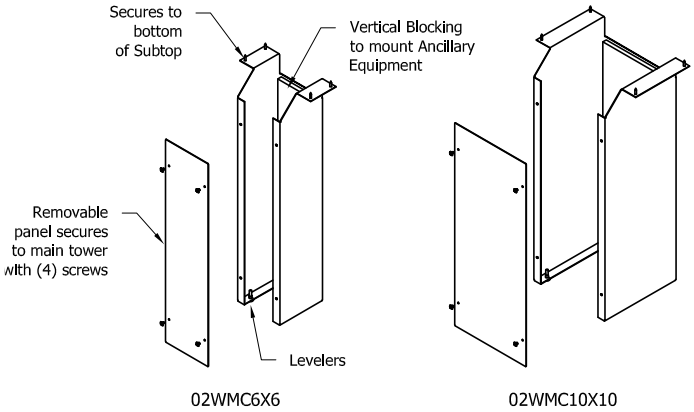

Wire Management Column
- Ordered separately but required with all power options
- Location is flexible but placement on table centerline is recommended

02WMC6X6 6″ x 6″ with clear inside of 4″ x 5″
02WMC10X10 10″ x 10″ with clear inside of 8″ x 9″

Highline Collection

Conference Tables
Power & Connectivity
Table Top: Single-sided

Single-sided table top access

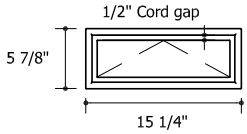

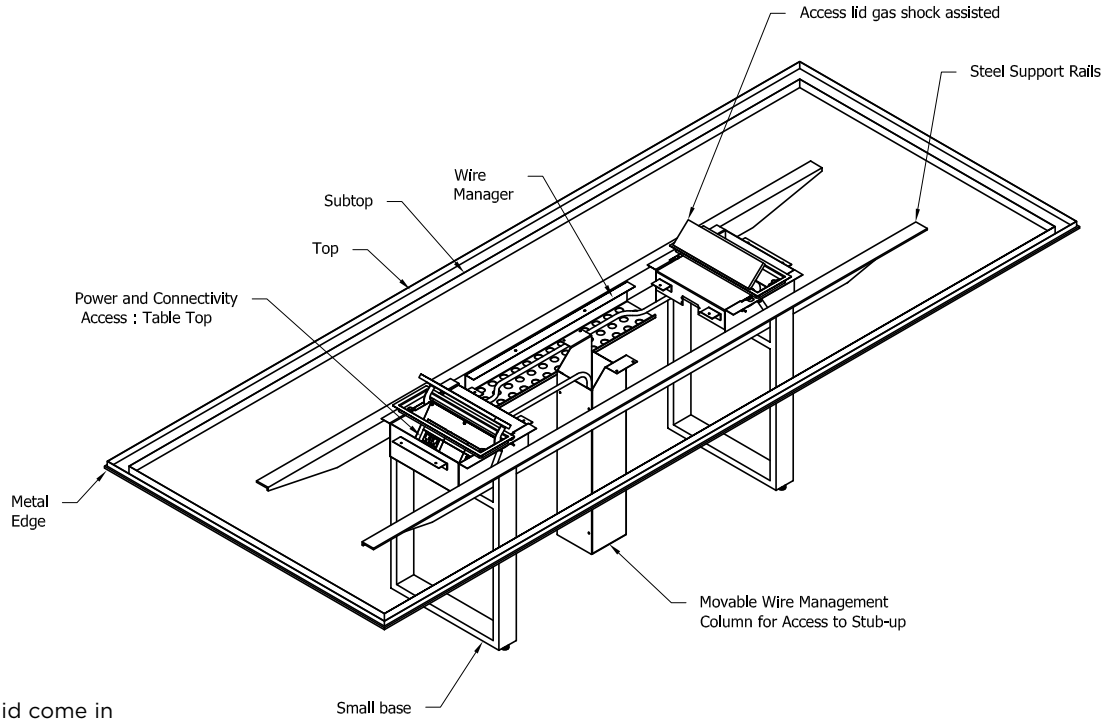

- Trim liner and metal access lid come in the specified metal finish

Table Top access (shown without retractors)

Table Top access (shown with retractors)

- Provided with:
  (2) AC power modules - specify hardwired (HW) or plug in (PI),
  (2)single and (3) double space blank plates
  (2) retractor cutouts with blanks - 1,2 or 3 knockout plates available
- For additional connectivity, replace double and single space blanks with Extron single or double space AAP plates as desired.
- Designed to accommodate Extron Series 2 retractors.
- For more information see **extron.com**

Highline Collection

Conference Tables
Power & Connectivity
Table Top: Small

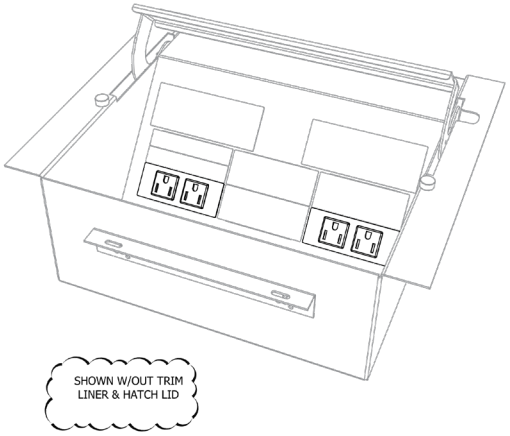

- Interior: Black powder coat metallic finish (MC12)
- Used in all conference tables

- Provided with:
  (2) AC power modules - specify hardwired (HW) or plug in (PI),
  (2)single and (3) double space blank plates
  (2) retractor cutouts with blanks - 1,2 or 3 knockout plates available
- For additional connectivity, replace double and single space blanks with Extron single or double space AAP plates as desired.
- Designed to accommodate Extron Series 2 retractors.
- For more information see **extron.com**

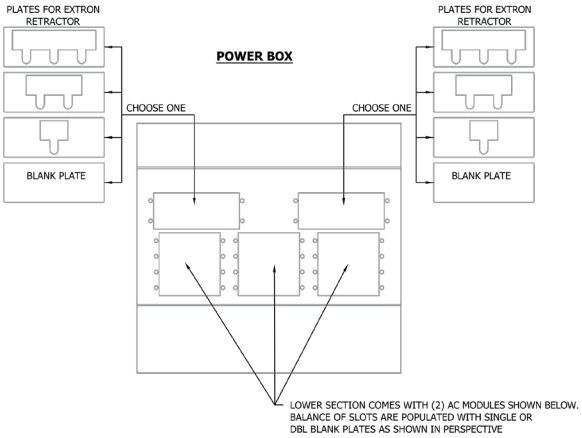

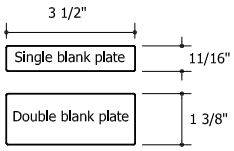

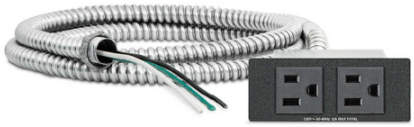

AC Module Hardwired (HW)
- 3/8" diameter x 6' long metal-clad cable with 6" pigtail
- Additional knockouts for series wiring
- 12A max per module

AC Module Plug In (PI)
- 7.5' detachable soft cord
- 6A max per module

Highline Collection

Conference Tables
Power & Connectivity
Undermount

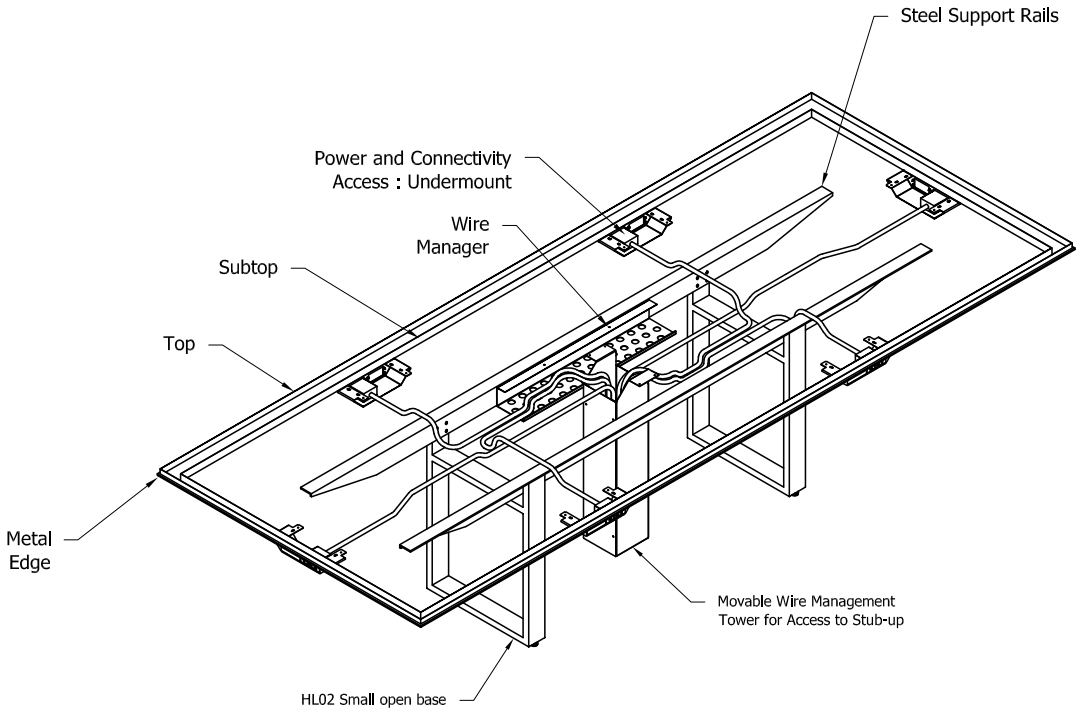

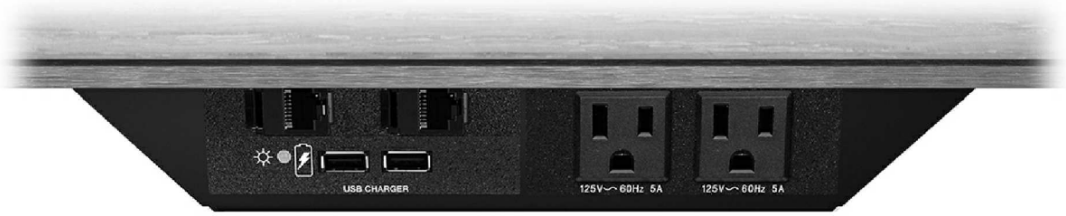

Undermount access (shown populated)
- Provided with 1 AC power module - specify hard-wired (HW) or plug in (PI), and 2 single space blank plates
- For additional connectivity, replace blank plates with Extron single or double space AAP plates as desired. For more information see **extron.com**

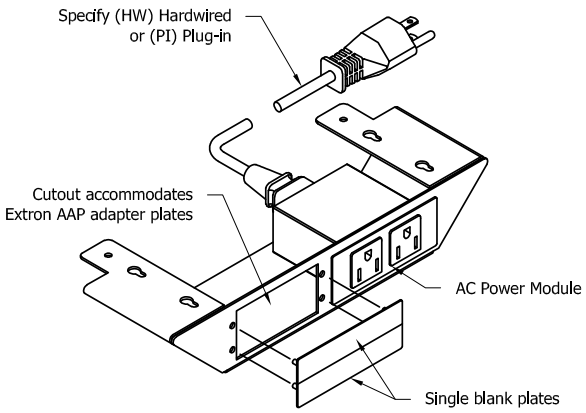

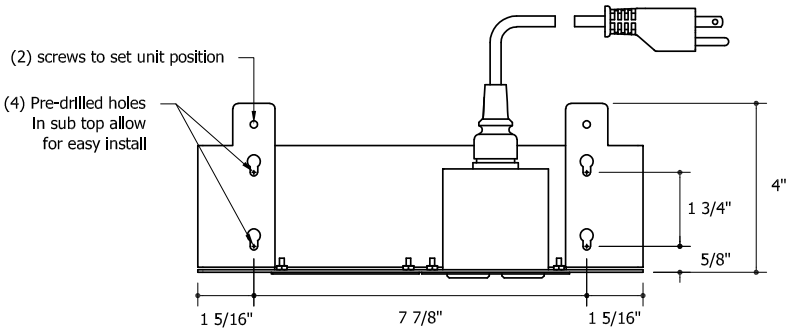

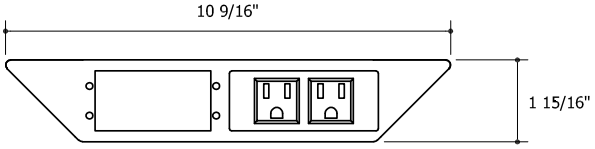

- Interior: Black powder coat metallic finish (MC12)
- Provided with 1 AC power module - specify hardwired (HW) or plug in (PI), and 2 single space blank plates
- For additional connectivity, replace blank plates with Extron single or double space AAP plates as desired. For more information see **extron.com**

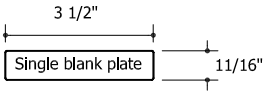

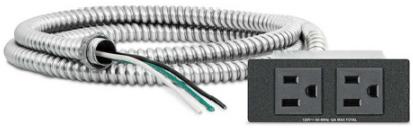

AC Module Hardwired (HW)
- 3/8” diameter x 6’ long metal-clad cable with 6” pigtail
- Additional knockouts for series wiring
- 12A max per module

AC Module Plug In (PI)
- 7.5’ detachable soft cord
- 6A max per module

Highline Collection

Meeting Tables
Overall Elevations and Clearance

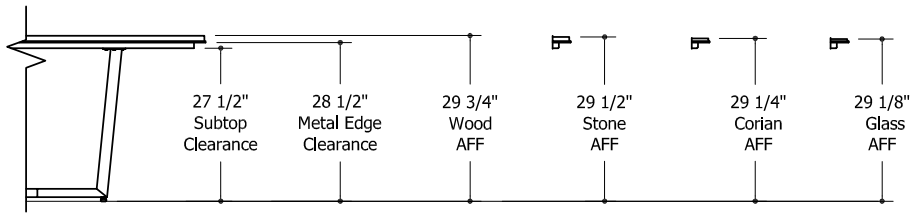

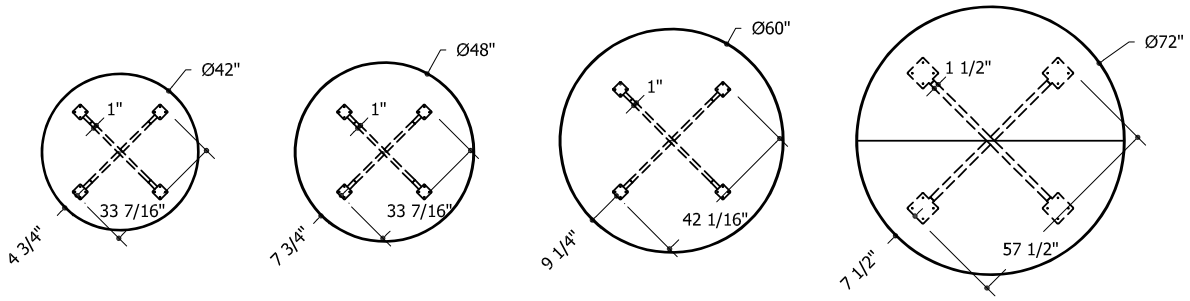

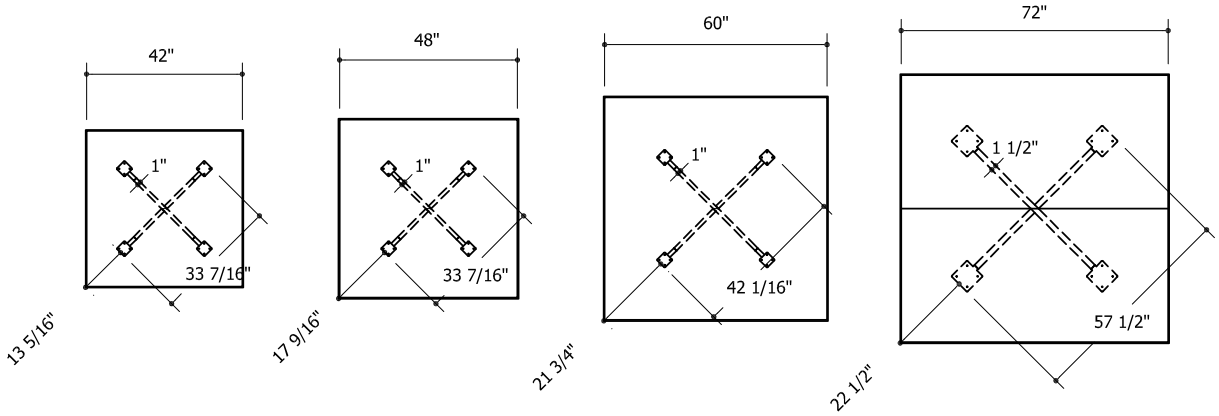

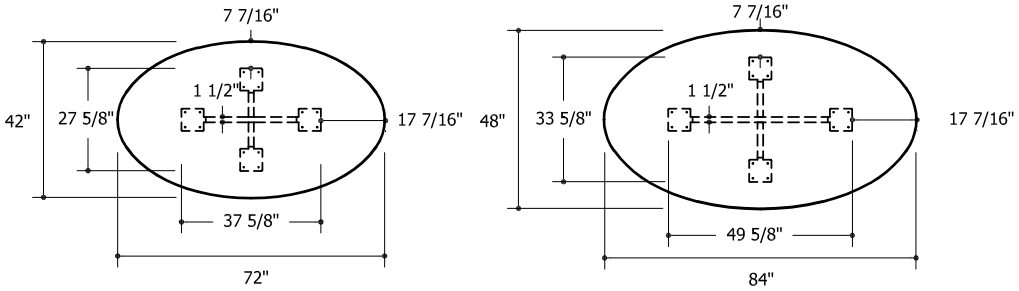

Highline Fifty Collection

Meeting Tables
Top Construction

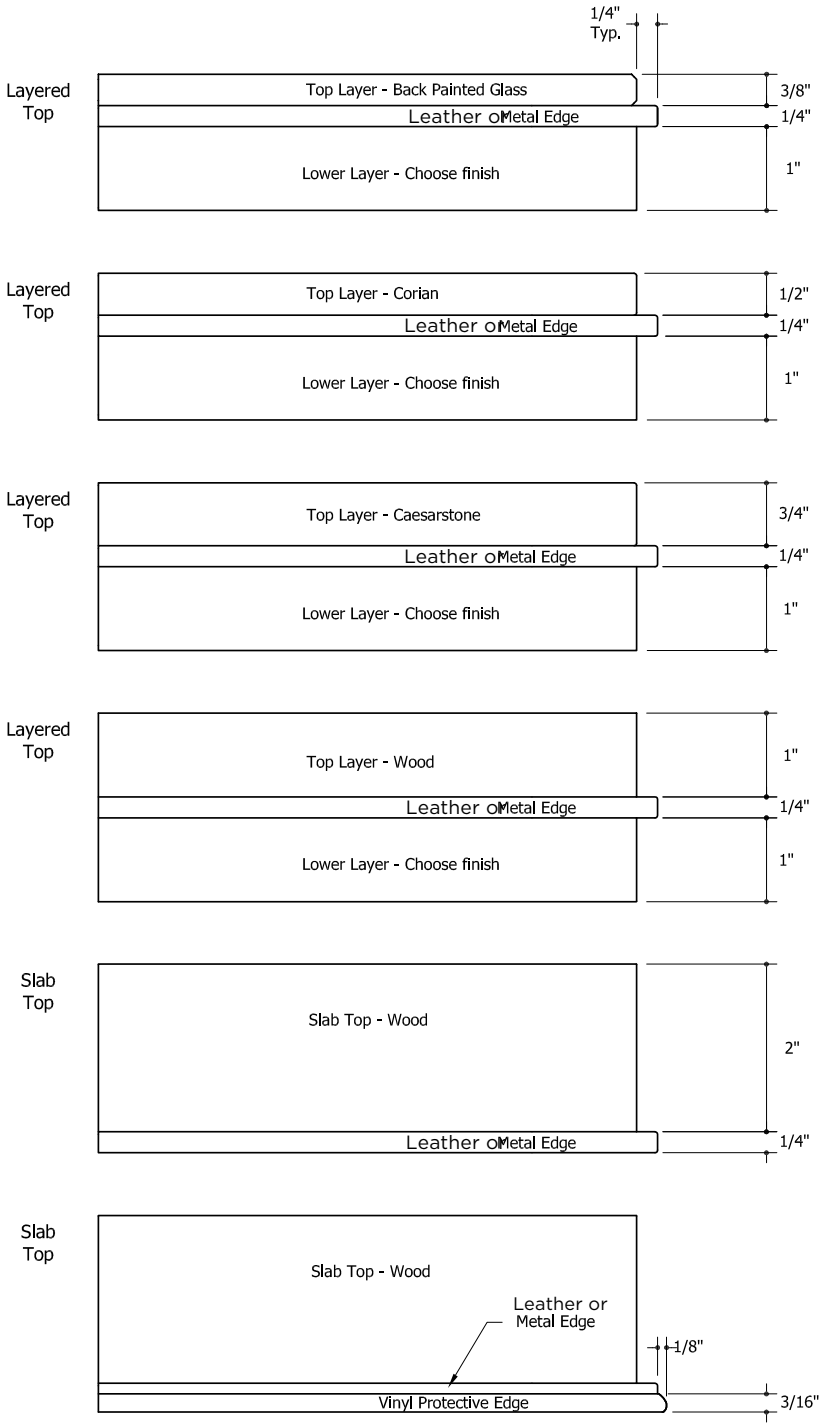

Highline Collection

Meeting Tables
Top Construction

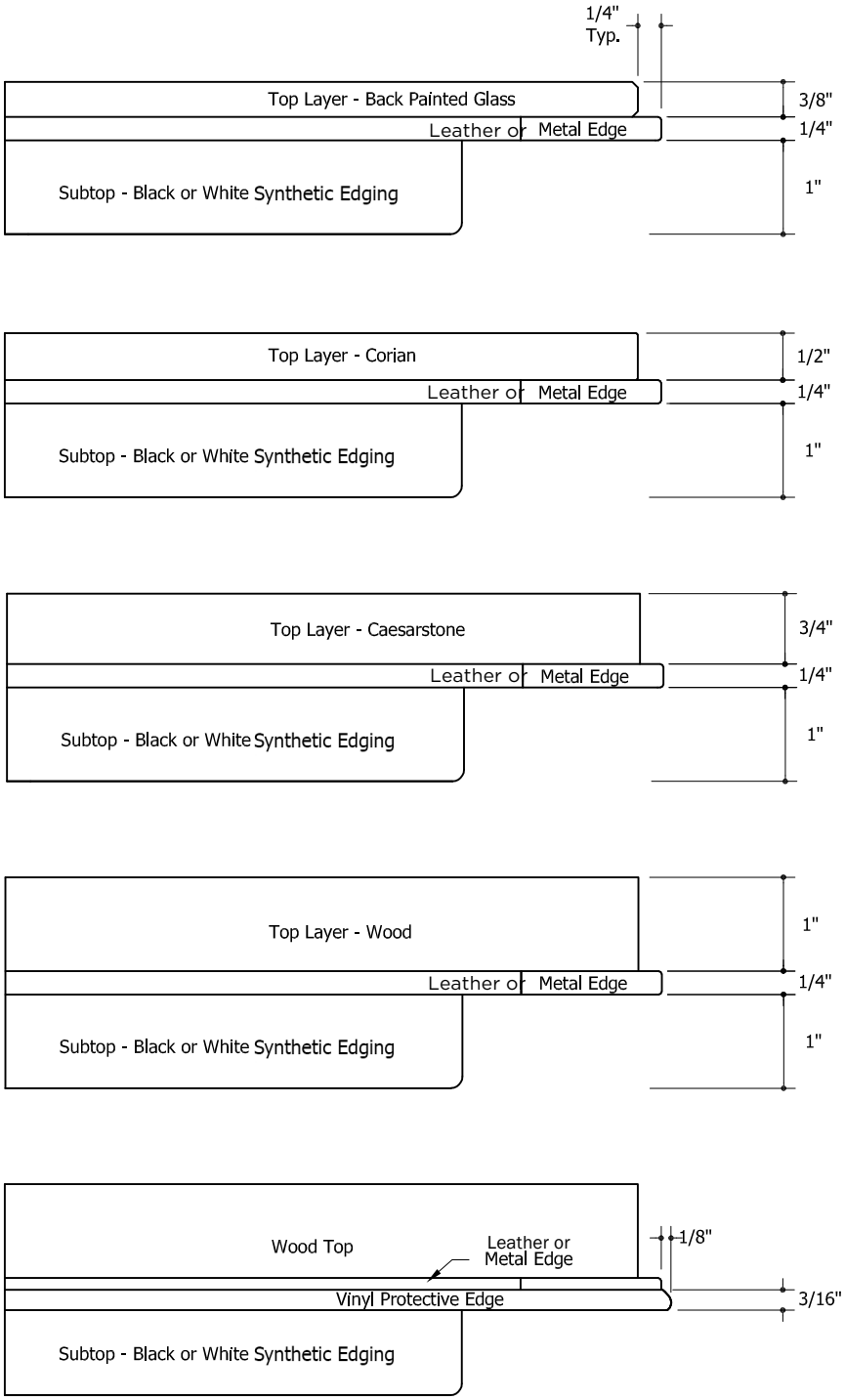

Highline Collection

Meeting Tables
Base Construction

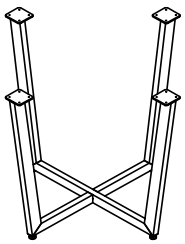

Small "X"- base

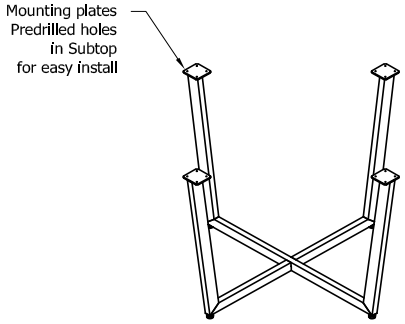

Large "X"- base

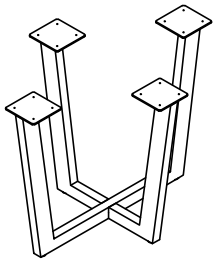

Small "XE"- base

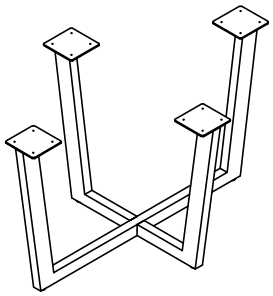

Large "XE"- base

Construction
- Tubular steel “X” base
- Small “X” base: 42″ / 48” Round and Square meeting tables
- Large “X” base: 60″ / 72” Round and Square meeting tables

- Small “XE” base: 42″ Elliptical meeting tables
- Large “XE” base: 48″ Elliptical meeting tables

- "XP" Wire Management base is automatically included when power and connectivity are specified on Square and Round meeting tables
- "XEP" Wire Management base is automatically included used when power and connectivity are specified on Elliptical meeting tables

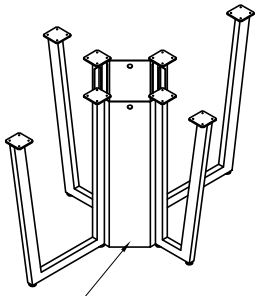

"XEP"- base

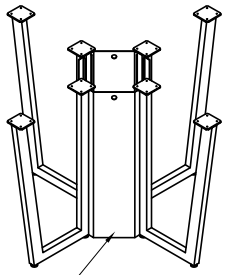

"XP"- base

Highline Collection

Meeting Tables
Power & Connectivity
Table Top

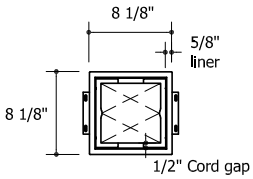

Metal Trim Liner with Matching Metal Access door

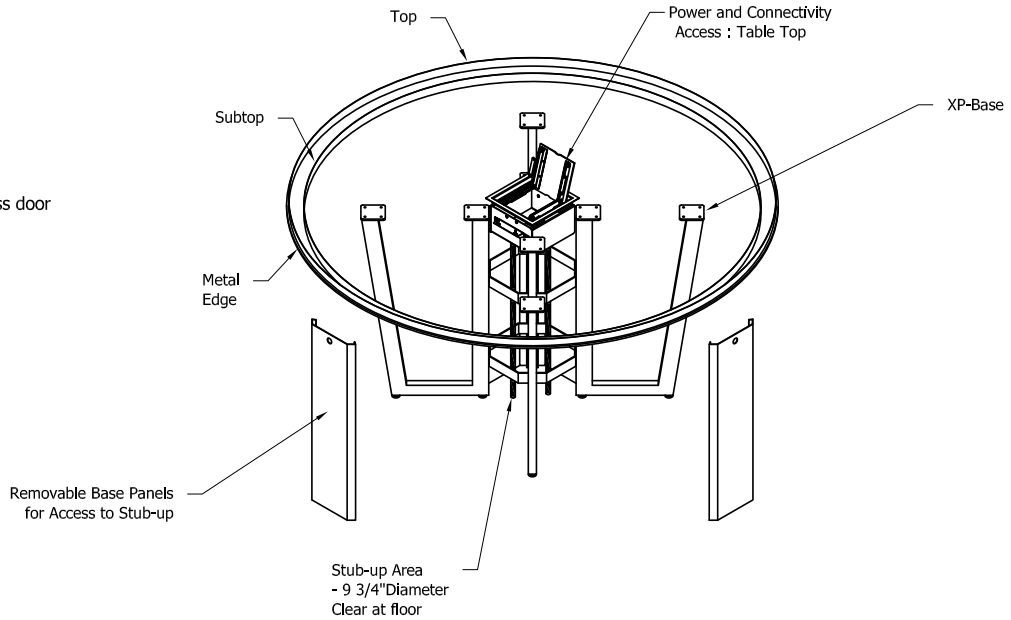

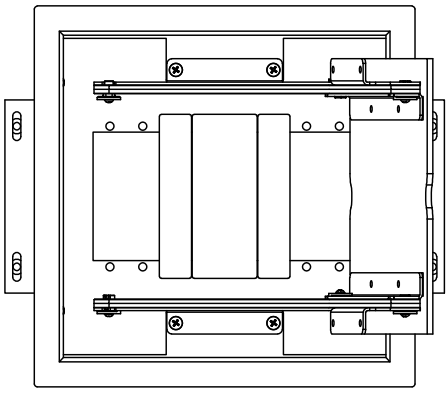

Table Top access - shown with (1)double and (2)single plank plates.

- Provided with:
  (2) AC power modules - specify hardwired (HW) or plug in (PI),
  (2)single and (3) double space blank plates
  (2) retractor cutouts with blanks - 1,2 or 3 knockout plates available
- For additional connectivity, replace double and single space blanks with Extron single or double space AAP plates as desired.
- Designed to accommodate Extron Series 2 retractors.
- For more information see **extron.com**

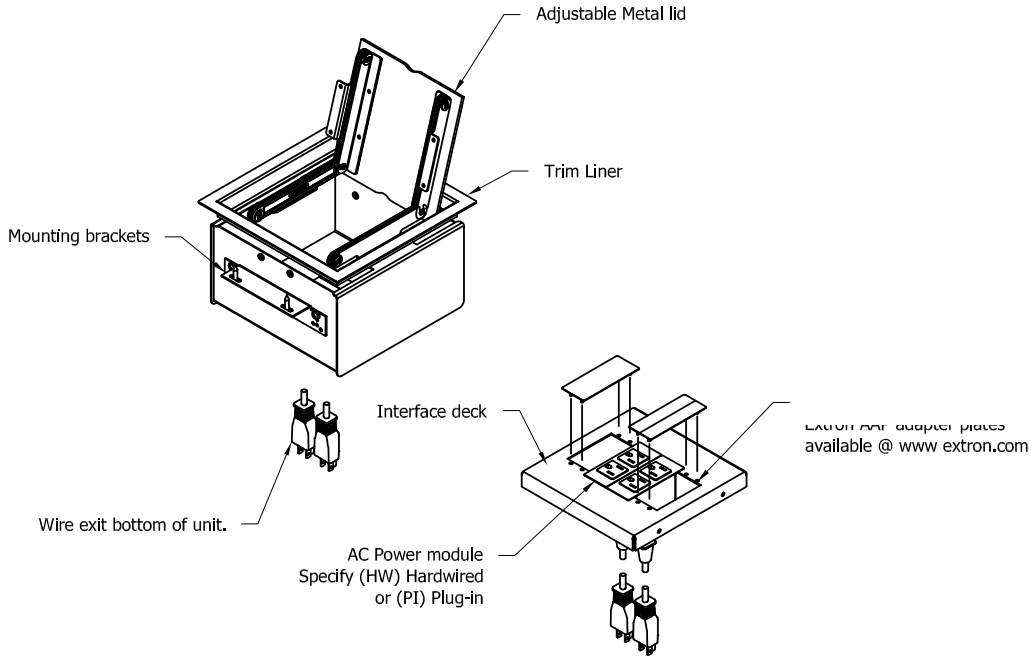

Table Top access - shown populated.

- Provided with:
  (2) AC power modules - specify hardwired (HW) or plug in (PI),
  (2)single and (3) double space blank plates
  (2) retractor cutouts with blanks - 1,2 or 3 knockout plates available
- For additional connectivity, replace double and single space blanks with Extron single or double space AAP plates as desired.
- Designed to accommodate Extron Series 2 retractors.
- For more information see **extron.com**

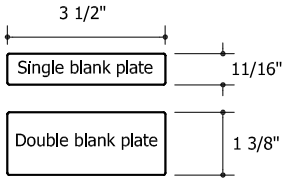

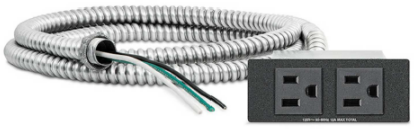

AC Module Hardwired (HW)
- 3/8" diameter x 6' long metal-clad cable with 6" pigtail
- Additional knockouts for series wiring
- 12A max per module

AC Module Plug In (PI)
- 7.5' detachable soft cord
- 6A max per module

Highline Collection

Meeting Tables
Power & Connectivity
Undermount

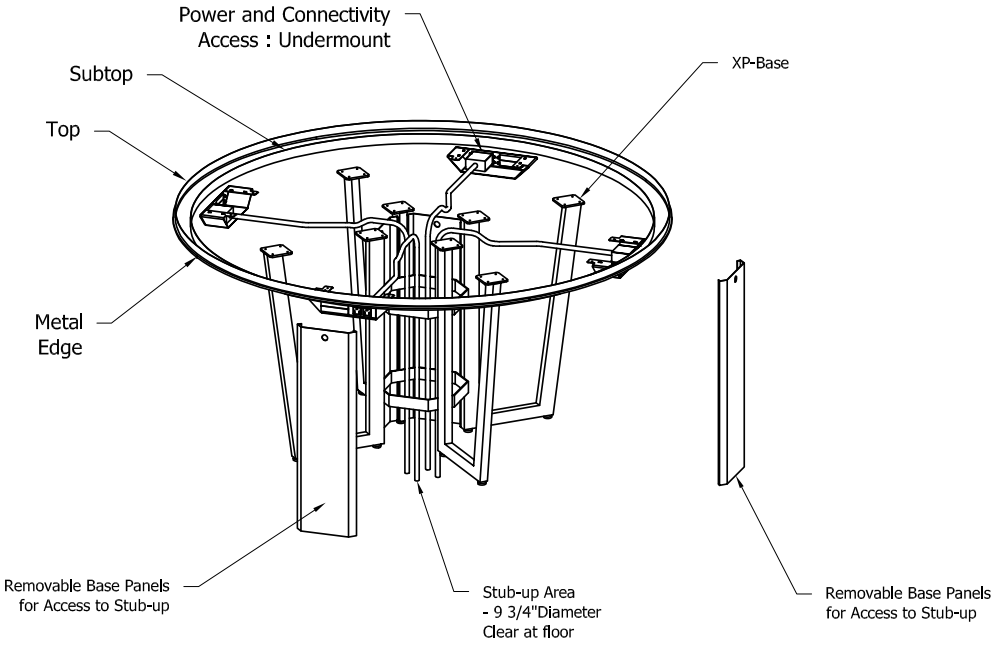

Undermount access (shown populated)
- Interior: Black powder coat metallic finish (MC12)
- Provided with 1 AC power module - specify hardwired (HW) or plug in (PI), and 2 single space blank plates
- For additional connectivity, replace blank plates with Extron single
  or double space AAP plates as desired. For more information see
  extron.com

Highline Collection

Meeting Tables
Power & Connectivity
Undermount

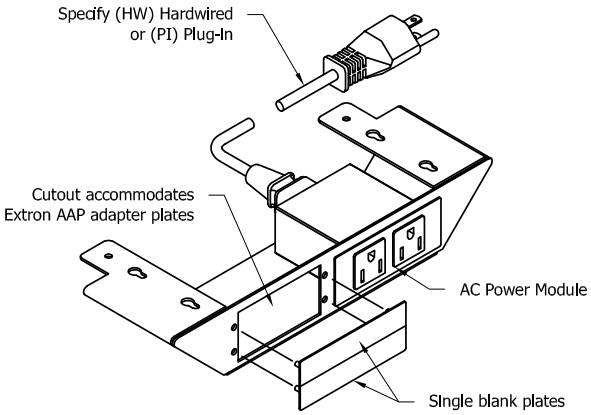

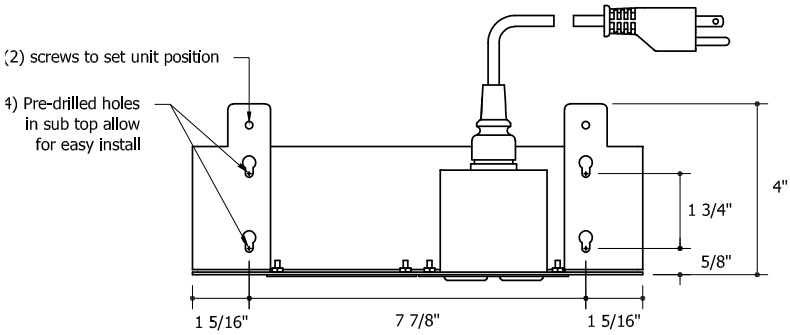

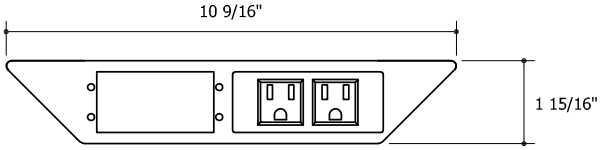

Undermount Access
- Interior: Black powder coat metallic finish (MC12)
- Provided with 1 AC power module - specify hardwired (HW) or plug
  in (PI), and 2 single space blank plates
- For additional connectivity, replace blank plates with Extron single
  or double space AAP plates as desired. For more information

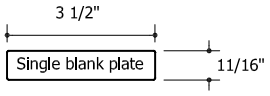

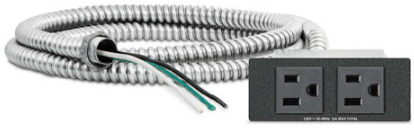

AC Module Hardwired (HW)
- 3/8” diameter x 6’ long metal-clad cable with 6” pigtail
- Additional knockouts for series wiring
- 12A max per module

AC Module Plug In (PI)
- 7.5’ detachable soft cord
- 6A max per module

Highline Collection

Credenzas
Elevations and Optional Tops

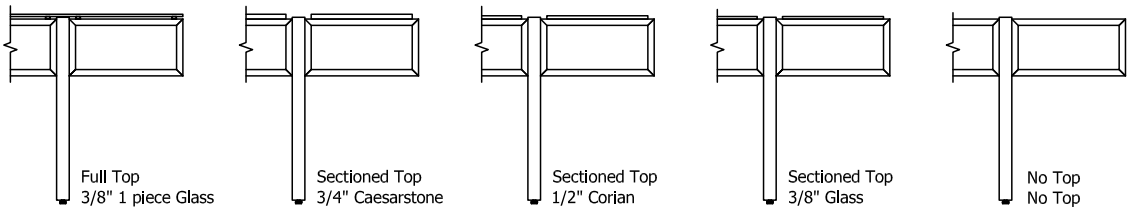

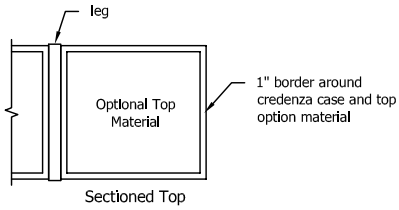

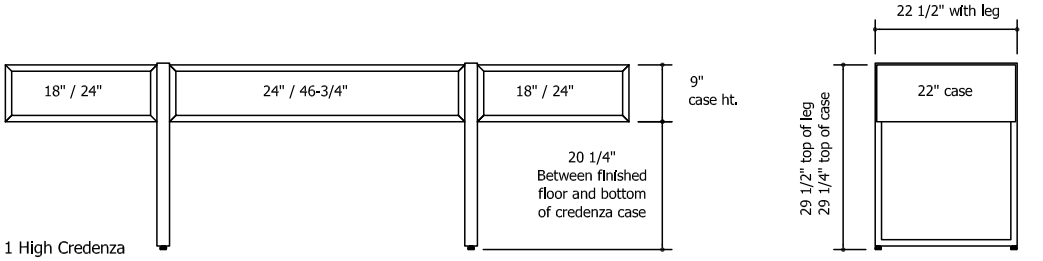

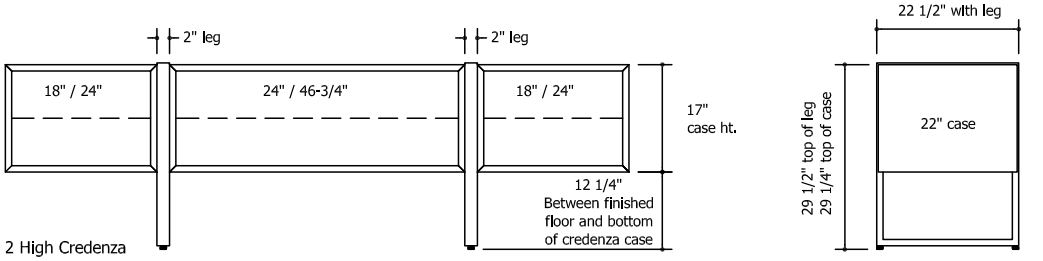

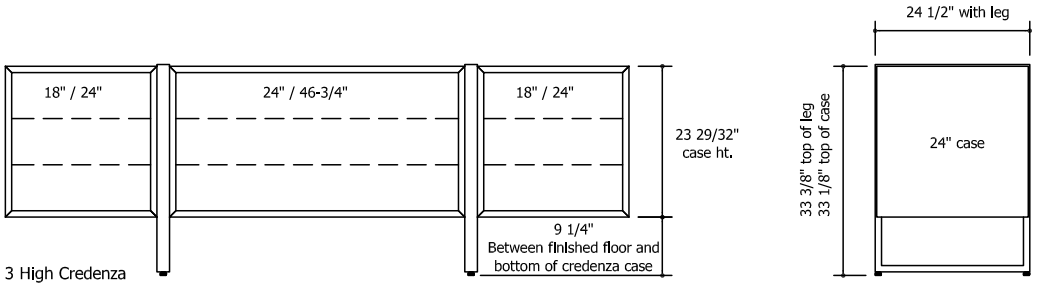

Highline Collection

Credenza
Leg and Case Details

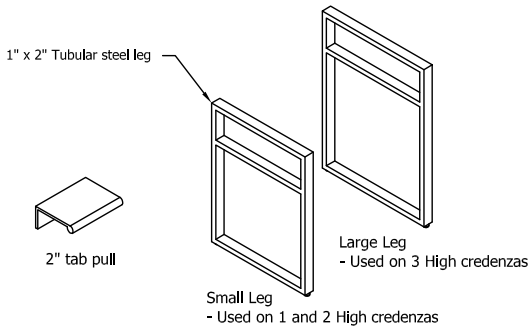

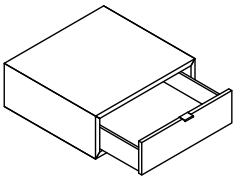

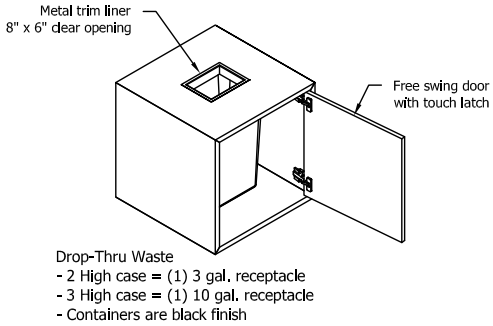

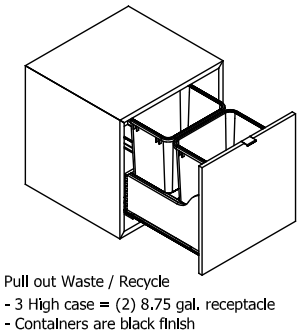

Credenza Notes
- Pulls and trash liners come in the specified metal finish
- All drawers have a 2" tab pull located in the center of the top edge of each drawer front
- All drawers use partial extension, self-closing undermount slides
- Pull-out trash units use full extension side mount slides
- Pull-out trash units are a Rev-A-Shelf product
- All doors use free swing hinges and touch latches
- All credenza top material finishes are secured to the case with silicone except for tops finished with full clear glass (FG GC00)
- Full clear glass (FG GC00) rests atop of 3/8" bumpers located on top of case
- Drop-through trash option is available with all top options except with full clear glass (FG GC00)

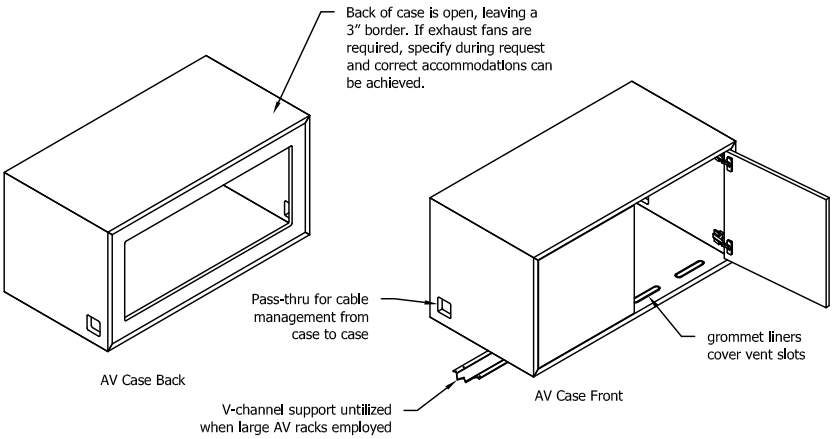

AV CASE
- All AV cases have an open back with a 3" border
- Coordinate AV requirements with the interior clearance dimensions provided below to ensure fit

1B" Case
14.25" wide x 22.18" deep x 21.15" high

24" Case
20.25" wide x 22.18" deep x 21.15" high

47" Case
41.25" wide x 22.18" deep x 21.15"

Highline Collection

1 High Credenza
Positional Configurations

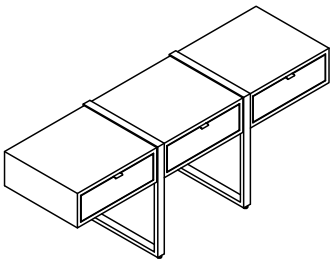

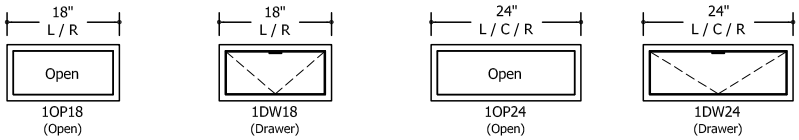

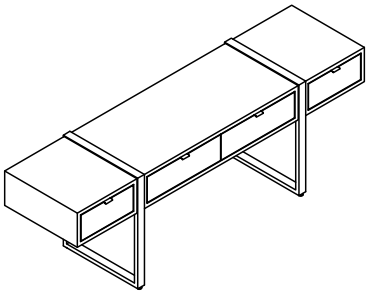

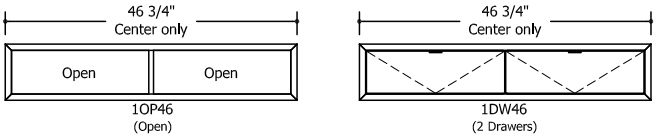

Highline Collection

2 High Credenzas
Positional Configurations

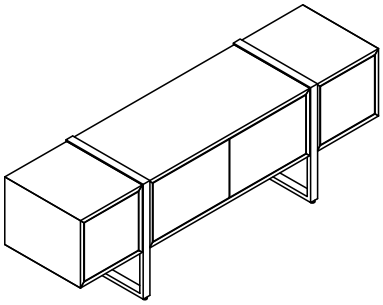

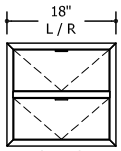

2DW18
(2 Drawers)

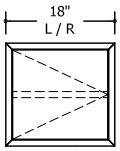

2DR18
(Door w/adj. Shelf)

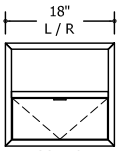

2OW18
(Open over Drawer)

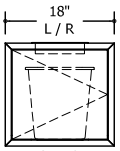

2TT18
(Trash thru Top
w/1 single can only)

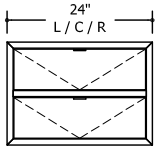

2DW24
(2 Drawers)

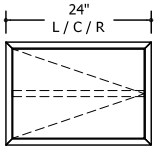

2DR24
(Door w/adj. Shelf)

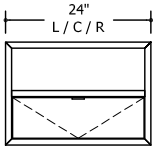

2OW24
(Open over Drawer)

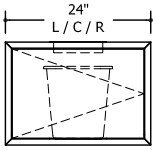

2TT24
(Trash thru Top
w/1 single can only)

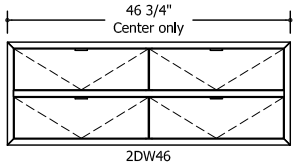

2DW46
(4 Drawers)

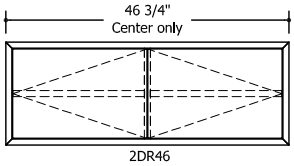

2DR46
(2 Doors w/2 adj. Shelves)

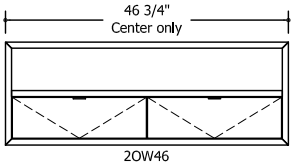

2OW46
(Open over 2 Drawers)

Highline Collection

3 High Credenzas
Positional Configurations

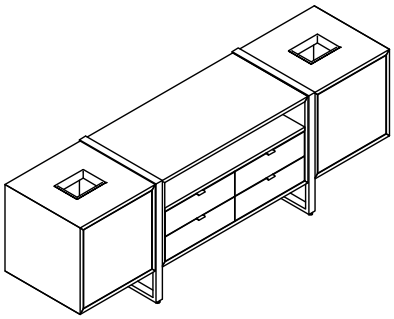

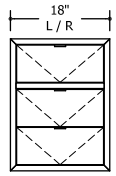

3DW18
(3 Drawers)

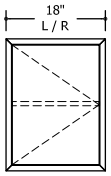

3DR18
(Door w/adj. shelf)

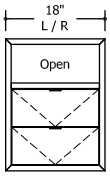

3OW18
(Open over 2 Drawers)

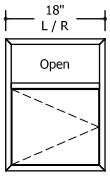

3OR18
(Open over Door)

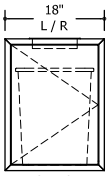

3TT18
(Trash thru top
w/1 single can only)

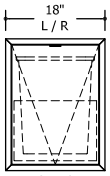

3TP18
(Trash pullout w/2
single cans front to back)

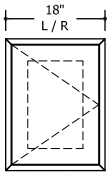

3AV18
(AV case, venting,
Large wire access)

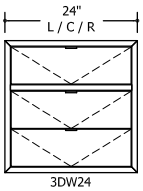

3DW24
(3 Drawers)

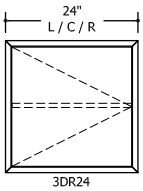

3DR24
(Door w/adj. shelf)

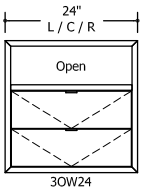

3OW24
(Open over 2 Drawers)

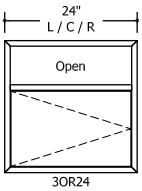

3OR24
(Open over Door)

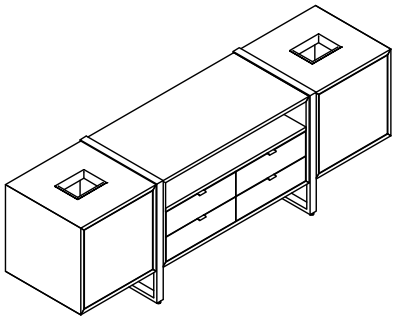

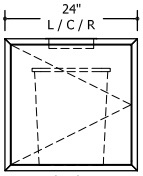

3TT24
(Trash thru top
w/1 single can only)

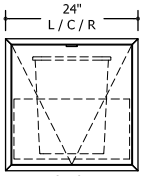

3TP24
(Trash pullout w/2
single cans front to back)

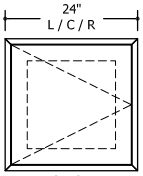

3AV24
(AV case, venting,
Large wire access)

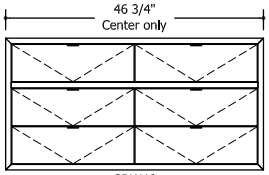

3DW46
(6 Drawers)

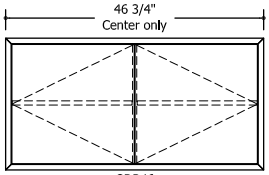

3DR46
(2 Doors w/2adj. shelf)

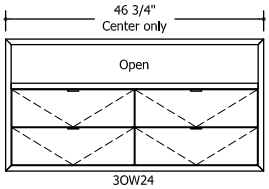

3OW24
(Open over 4 Drawers)

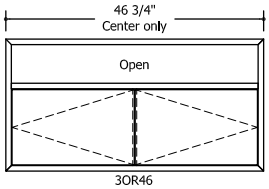

3OR46
(Open over Doors)

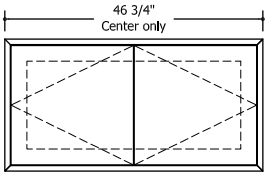

3AV46
(AV case, venting, Large wire access)

Highline Fifty Collection

Conference Tables
Overall Elevations and Clearance

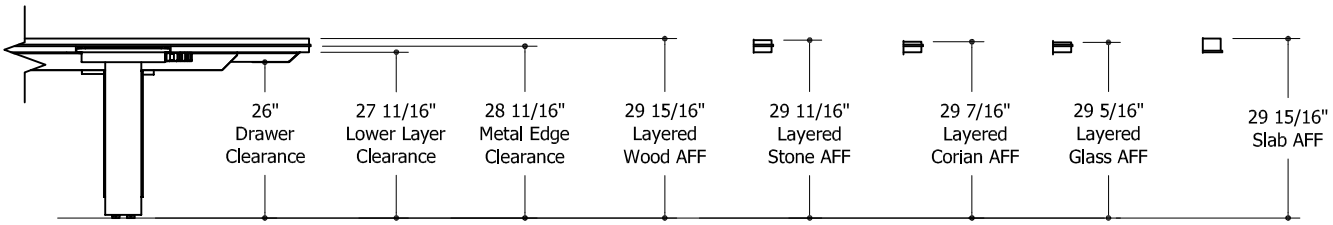

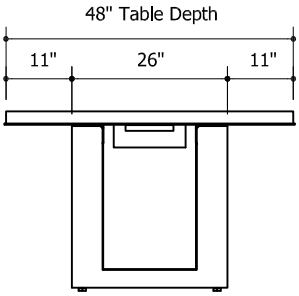

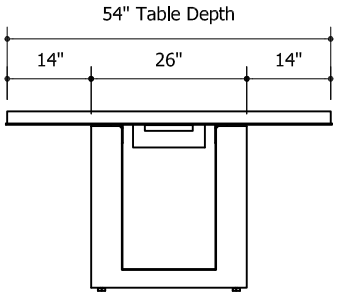

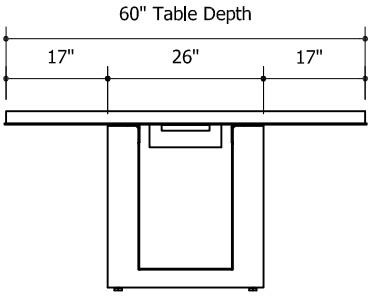

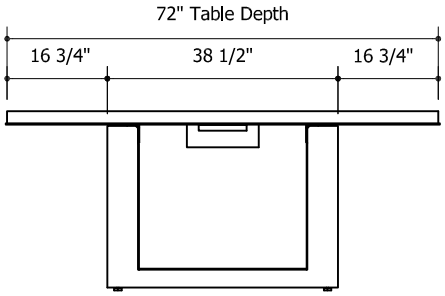

Highline Fifty Collection

Conference Tables
Top Construction

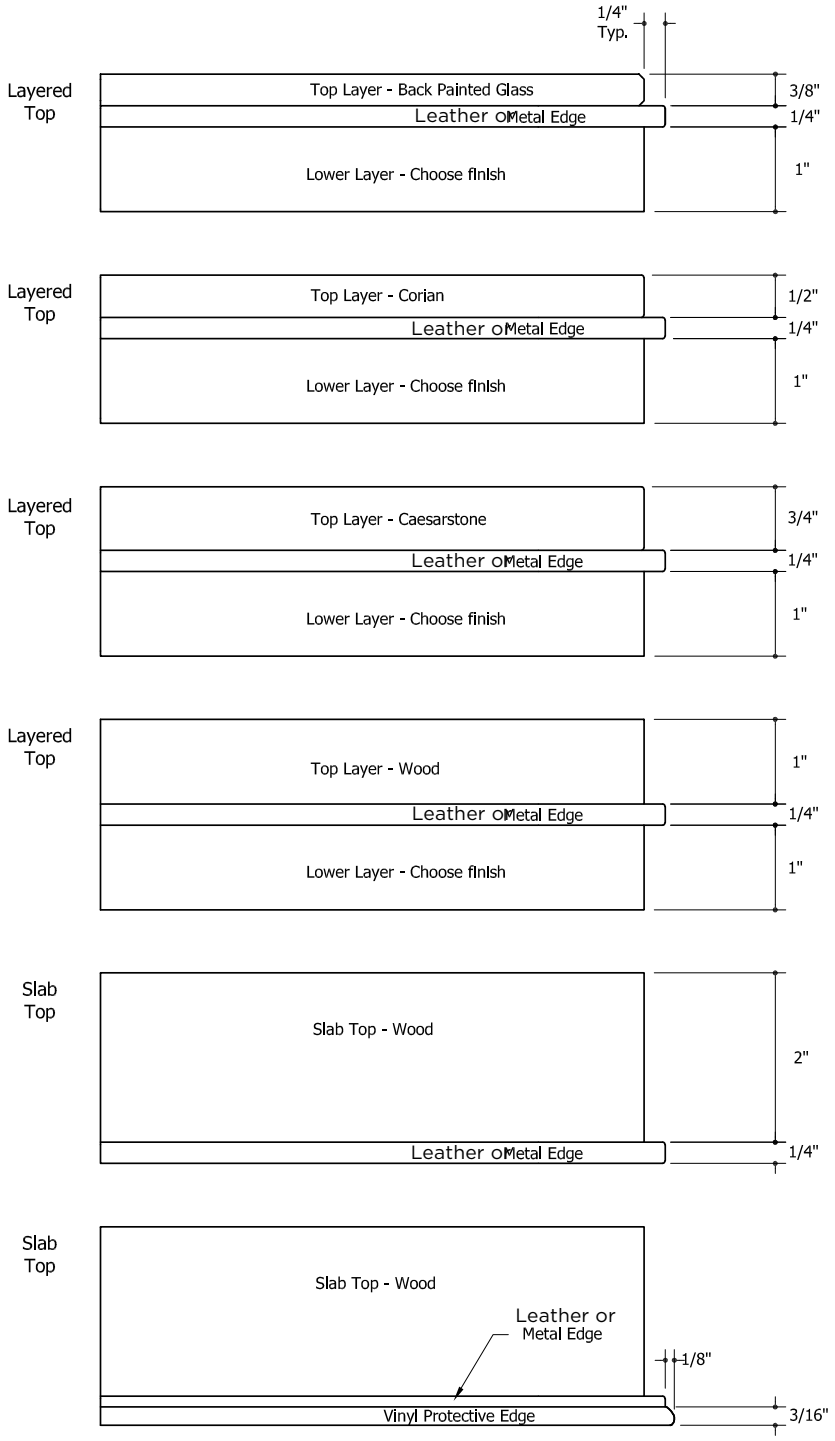

Highline Fifty Collection

Conference Tables
Base Construction

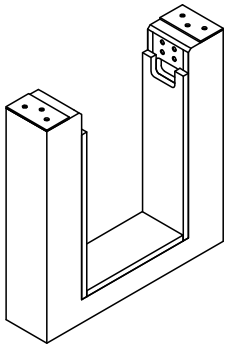

Small base : 42" / 48" / 54" / 60" Deep Tables
"ON" Open Base, no metal trim

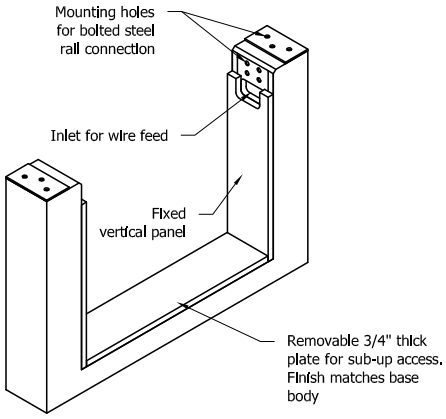

Large base : 72" Deep Tables
"ON" Open Base, no metal trim

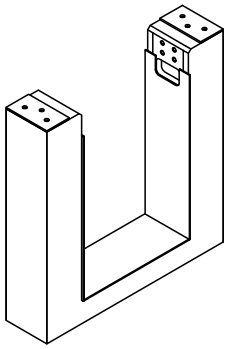

Small base : 42" / 48" / 54" / 60" Deep Tables
"OT" Open Base, with metal trim

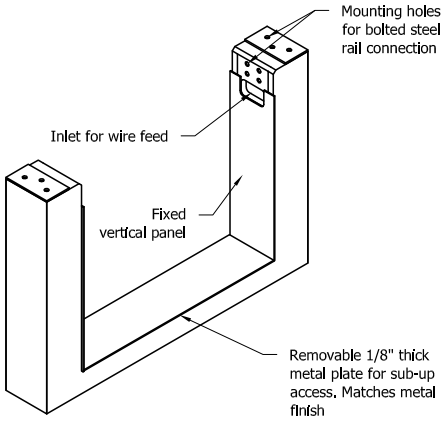

Large base : 72" Deep Tables
"OT" Open Base, with metal trim

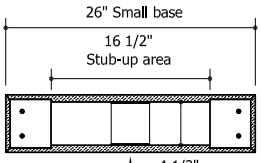

Horizontal section of Small Base

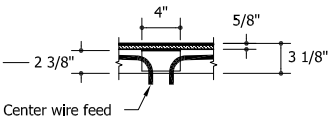

Vertical section at center of Base

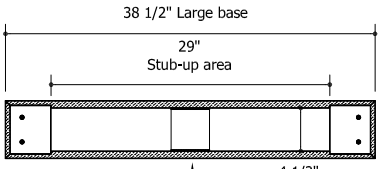

Horizontal section of Large base

Highline Fifty Collection

Conference Tables
Power & Connectivity
Drawers

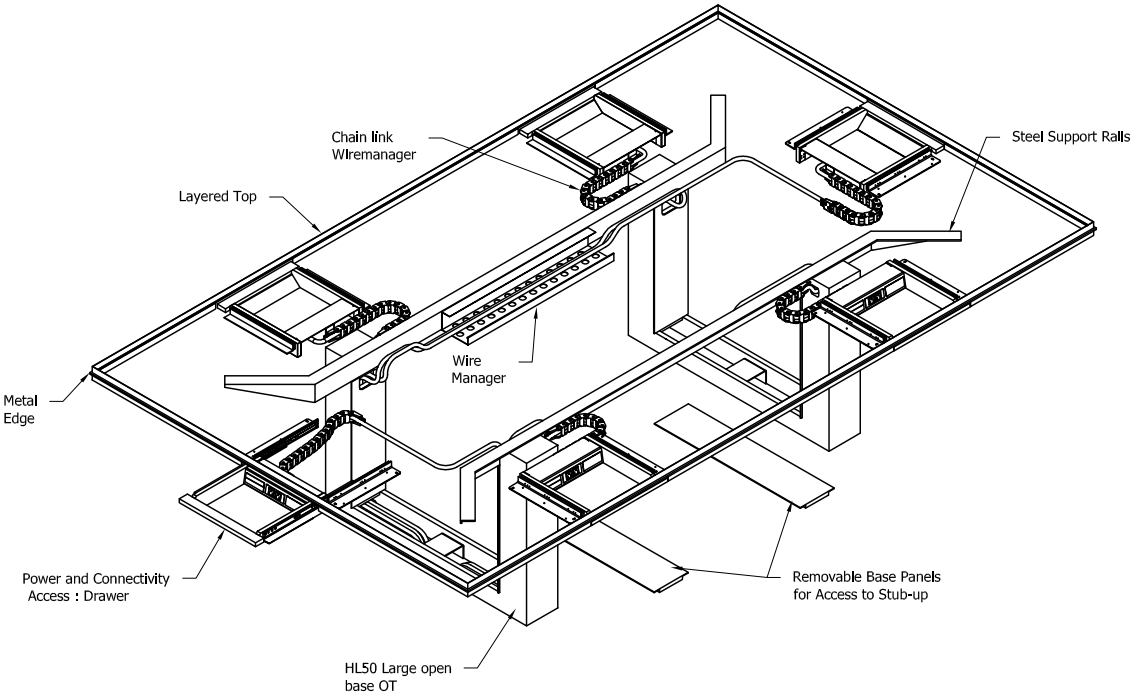

Drawer (shown populated)
- Interior: Black powder coat metallic finish (MC12)
- Provided with 1 AC power module - specify hardwired (HW) or plug
  in (PI), and 2 single space blank plates
- For additional connectivity, replace blank plates with Extron single
  or double space AAP plates as desired. For more information see

Highline Fifty Collection

Conference Tables
Power & Connectivity
Drawers

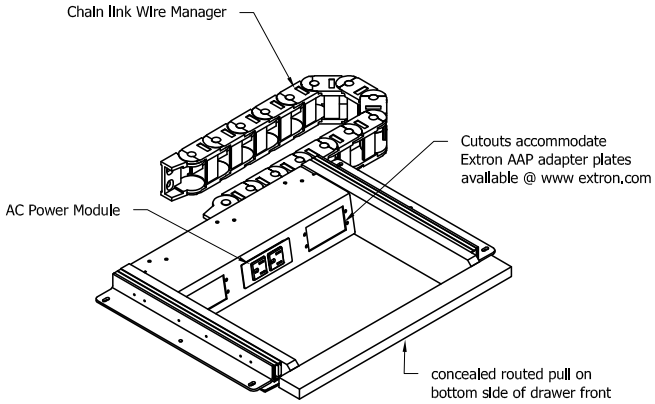

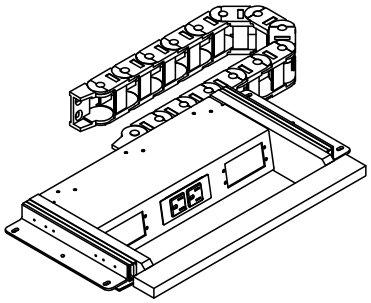

Large Drawer
- 6 1/2" deep x 12 3/4" wide flat storage with 2 1/2" interior height
- 3/8" gap above drawer for cord exit
- Concealed routed finger pull under front
- Used at table ends
- Used along the length of 60" / 72" deep tables
- Interior drawer finish: Black powder coat metallic (MC12)
- Drawer front matches lower layer finish
- Provided with 1 AC power module - specify hardwired (HW) or plug in (PI), and 2 single space blank plates

Small Drawer
- 1 7/8" deep x 12 3/4" wide flat storage with 2 1/2" interior height
- 3/8" gap above drawer for cord exit
- Concealed routed finger pull under front
- Used along the length of 48" / 54" deep tables
- Interior drawer finish: Black powder coat metallic (MC12)
- Drawer front matches lower layer finish
- Provided with 1 AC power module - specify hardwired (HW) or plug in (PI), and 2 single space blank plates

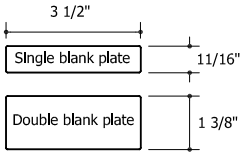

AC Module Hardwired (HW)
- 3/8" diameter x 6' long metal-clad cable with 6" pigtail
- Additional knockouts for series wiring
- 12A max per module

AC Module Plug In (PI)
- 7.5' detachable soft cord
- 6A max per module

Highline Fifty Collection

Conference Tables
Power & Connectivity
Table Top: Single-sided

Single-sided table top access

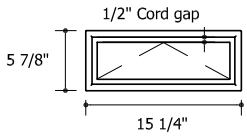

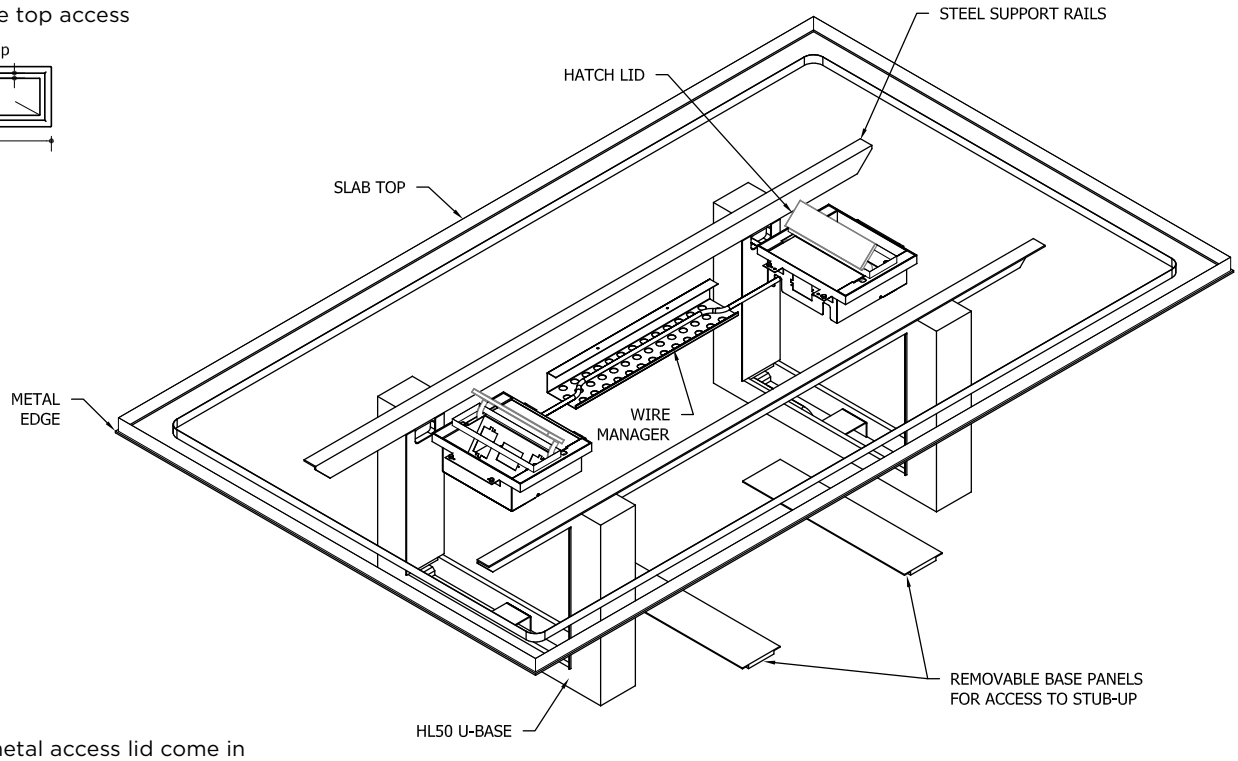

- Trim liner and metal access lid come in the specified metal finish

Table Top access (shown without retractors)

Table Top access (shown with retractors)

- Provided with:
  (2) AC power modules - specify hardwired (HW) or plug in (PI),
  (2)single and (3) double space blank plates
  (2) retractor cutouts with blanks - 1,2 or 3 knockout plates available
- For additional connectivity, replace double and single space blanks with Extron single or double space AAP plates as desired.
- Designed to accommodate Extron Series 2 retractors.
- For more information see **extron.com**

Highline Fifty Collection

Conference Tables
Power & Connectivity
Table Top: Small

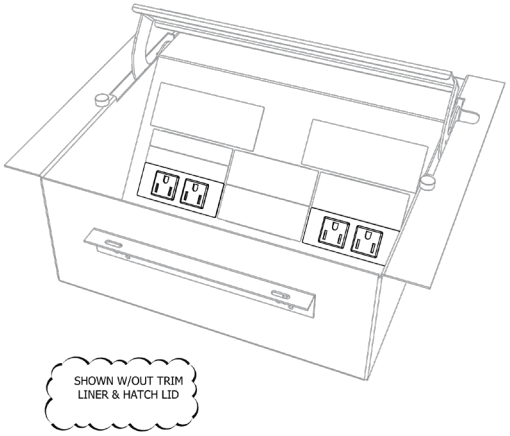

- Interior: Black powder coat metallic finish (MC12)
- Used in all conference tables

- Provided with:
  (2) AC power modules - specify hardwired (HW) or plug in (PI),
  (2)single and (3) double space blank plates
  (2) retractor cutouts with blanks - 1,2 or 3 knockout plates available
- For additional connectivity, replace double and single space blanks with Extron single or double space AAP plates as desired.
- Designed to accommodate Extron Series 2 retractors.
- For more information see **extron.com**

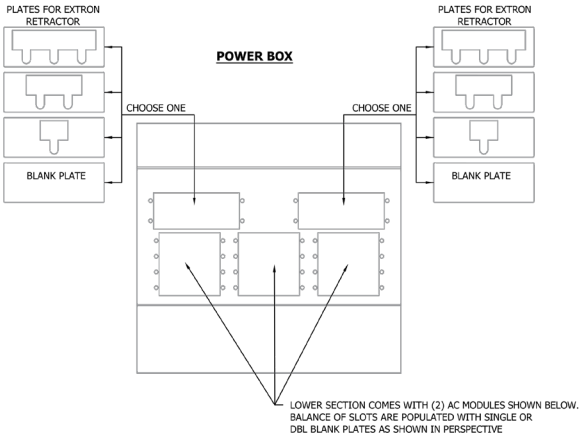

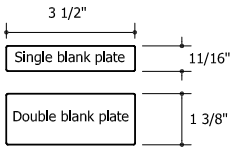

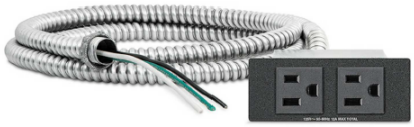

AC Module Hardwired (HW)
- 3/8" diameter x 6' long metal-clad cable with 6" pigtail
- Additional knockouts for series wiring
- 12A max per module

AC Module Plug In (PI)
- 7.5' detachable soft cord
- 6A max per module

Highline Fifty Collection

Conference Tables
Power & Connectivity
Undermount

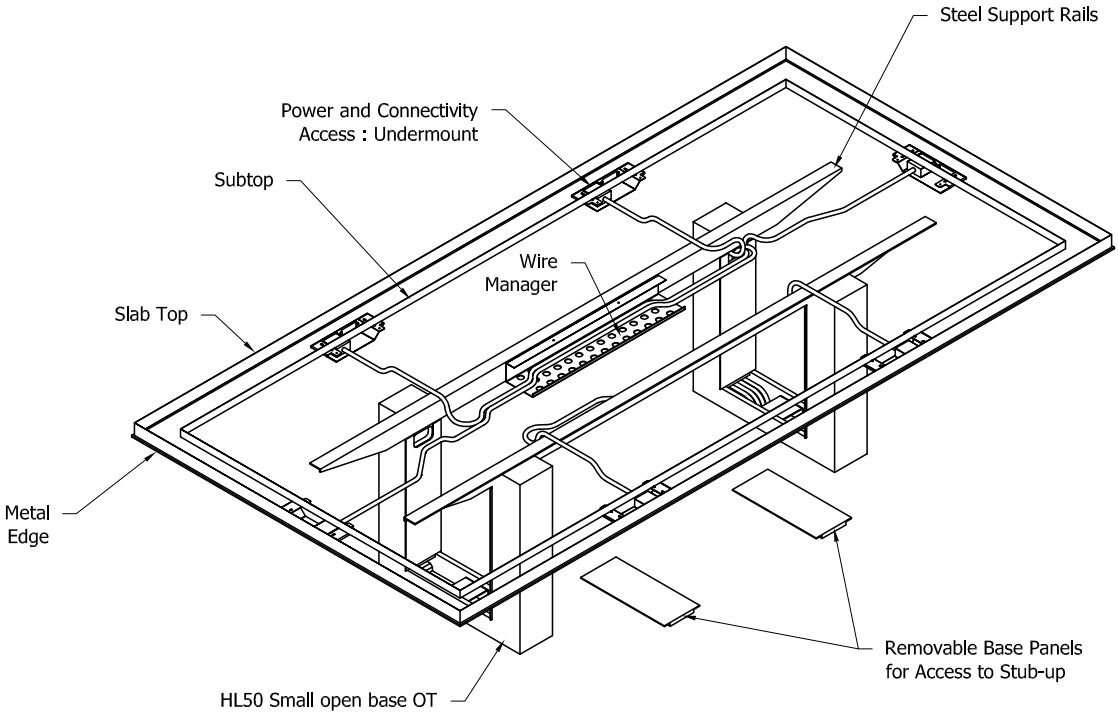

Undermount access (shown populated)
- Black powder coat metallic finish (MC12)
- Provided with 1 AC power module - specify hardwired (HW) or plug
  in (PI), and 2 single space blank plates
- For additional connectivity replace blank plates with Extron single
  or double space AAP plates as desired. For more information see
  extron.com

Highline Fifty Collection

Conference Tables
Power & Connectivity
Undermount

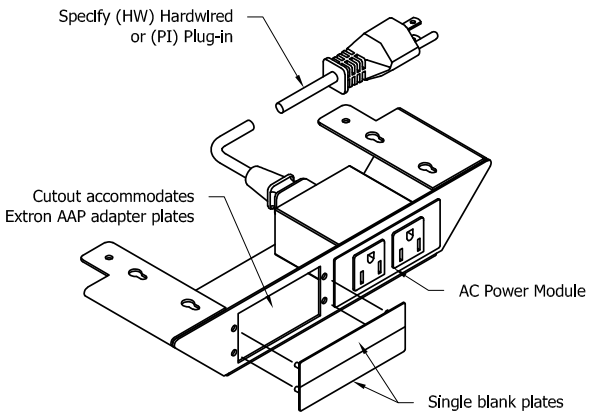

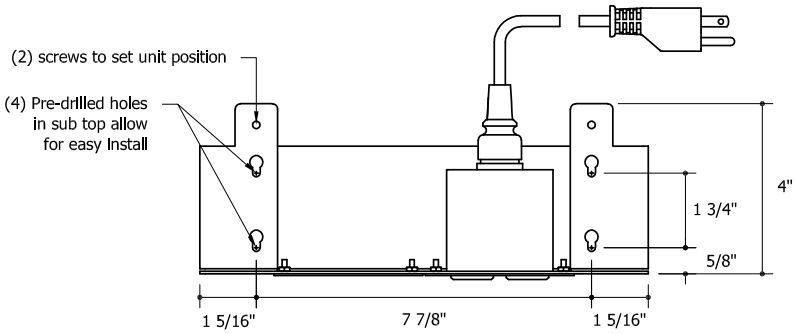

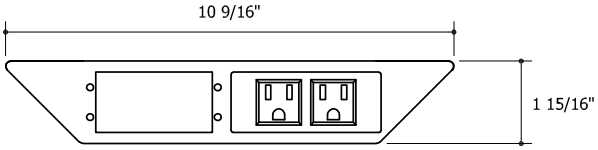

- Black powder coat metallic finish (MC12)
- Provided with 1 AC power module - specify hardwired (HW) or plug
  in (PI), and 2 single space blank plates
- For additional connectivity replace blank plates with Extron single
  or double space AAP plates as desired. For more information see
  extron.com

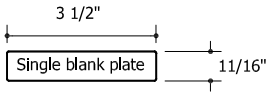

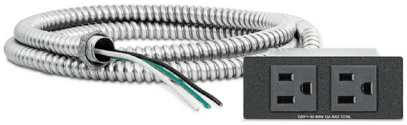

AC Module Hardwired (HW)
- 3/8" diameter x 6' long metal clad cable with 6" pigtail
- Additional knockouts for series wiring
- 12A max per module

AC Module Plug In (PI)
- 7.5' detachable soft cord
- 6A max per module

Highline Fifty Collection

Meeting Tables
Overall Elevations and Clearance

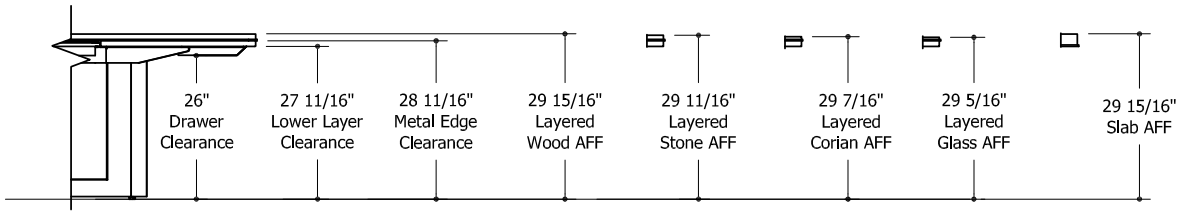

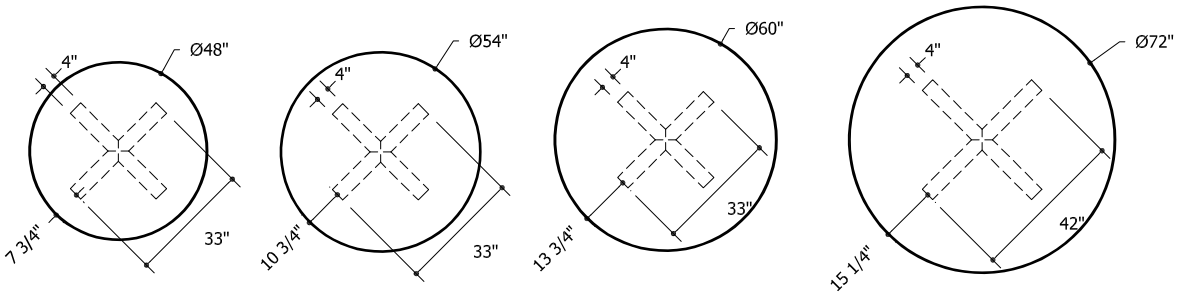

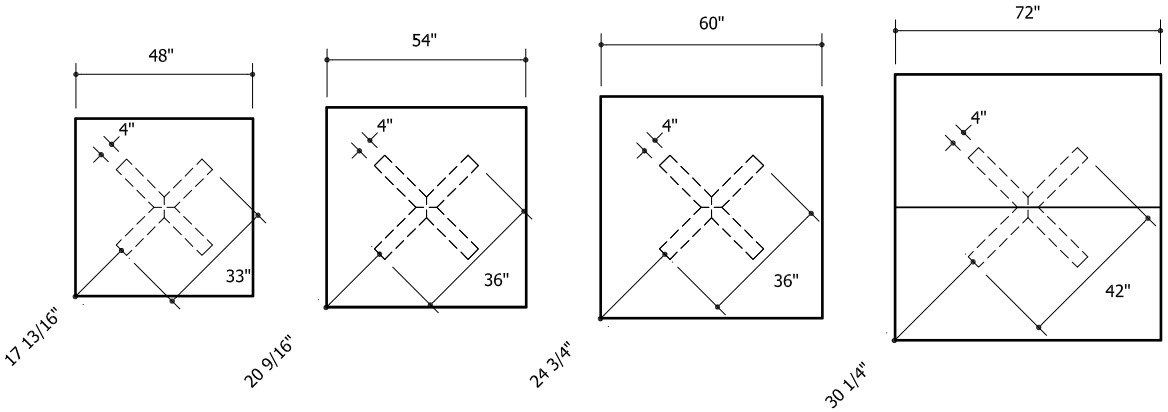

Highline Fifty Collection

Meeting Tables
Base Construction

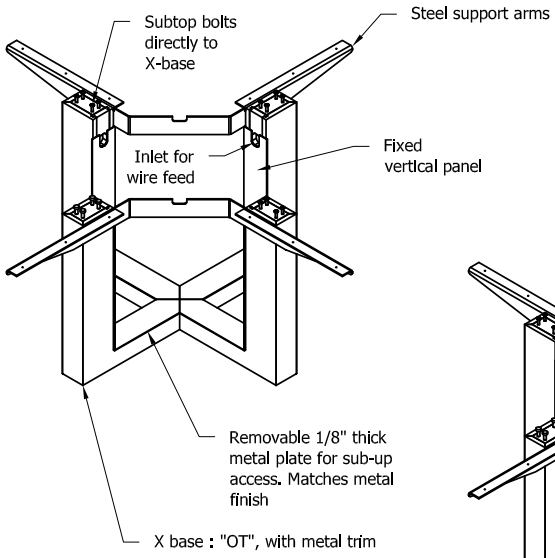

HL03 X base :
33" fits - 48" Round
- 48" Square
- 54" Round

36" fits - 54" Square
- 60" Round
- 60" Square

42" fits - 72" Round
- 72" Square

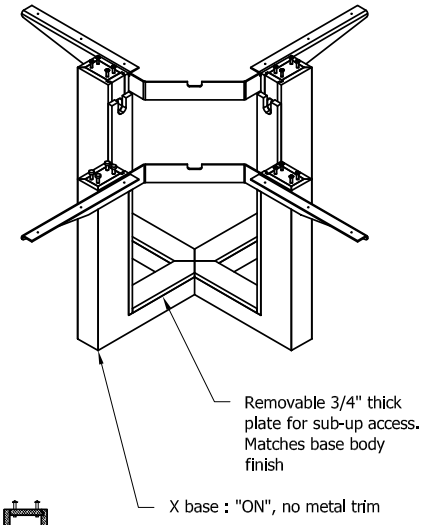

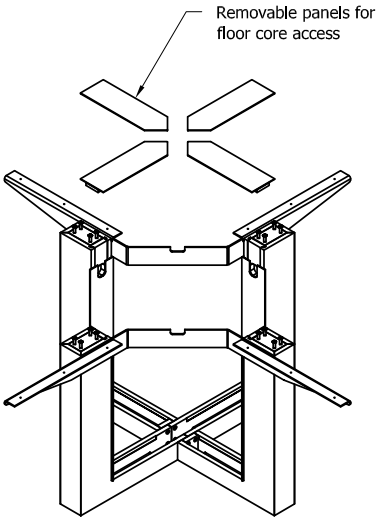

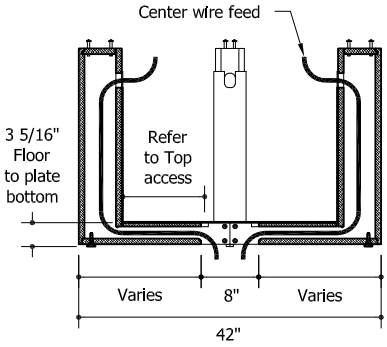

Vertical section at center of Base

Top access:
33" - 2 3/8" x 6 7/8"
36" - 2 3/8" x 8 3/8"
42" - 2 3/8" x 11 3/8"

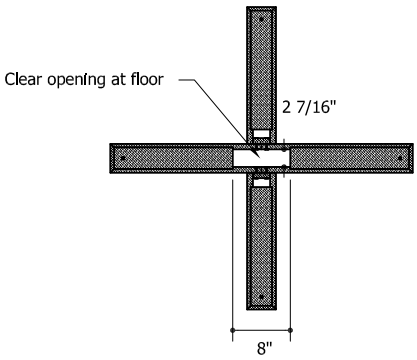

Horizontal section of typical base

Highline Fifty Collection

Meeting Tables
Power & Connectivity
Drawers

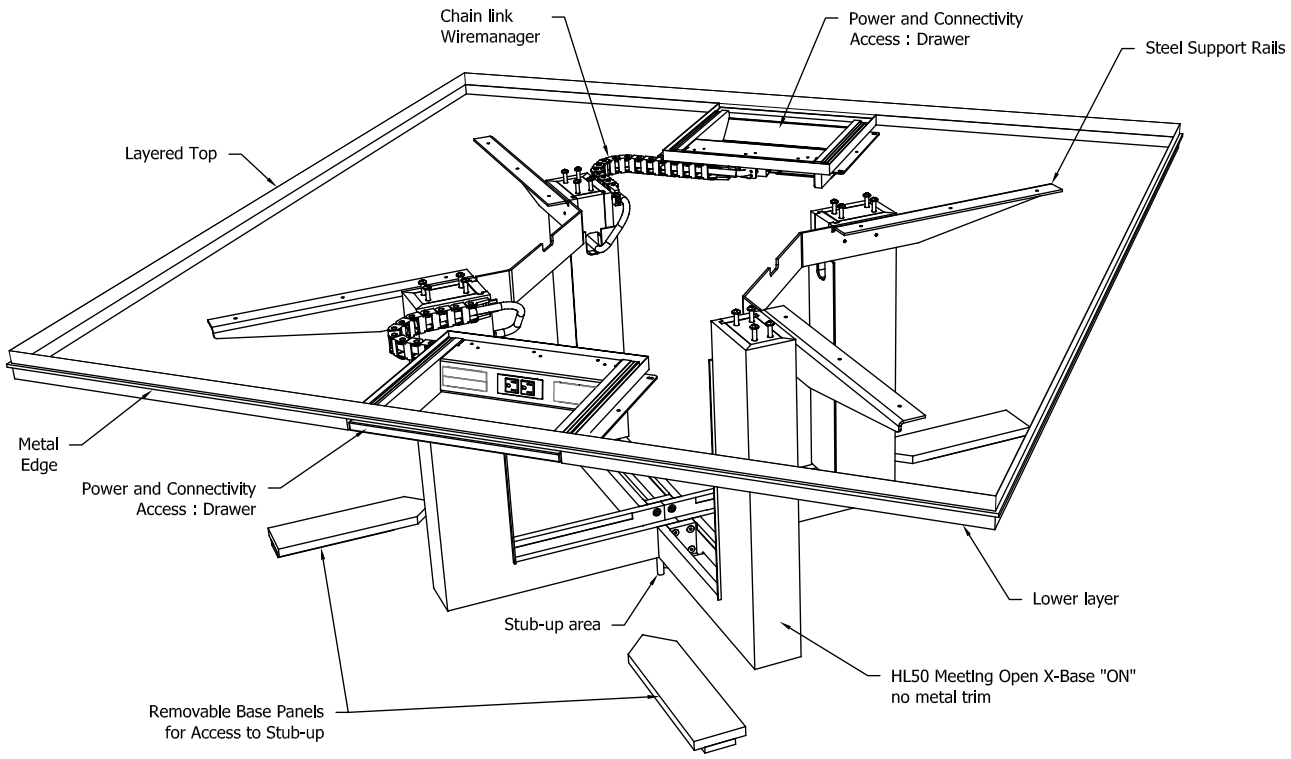

Drawer (shown populated)
- Black powder coat metallic finish (MC12)
- Provided with 1 AC power module - specify hardwired (HW) or plug in (PI), and 2 single space blank plates
- For additional connectivity replace blank plates with Extron single or double space AAP plates as desired. For more information see **extron.com**

Highline Fifty Collection

Meeting Tables
Power & Connectivity
Drawers

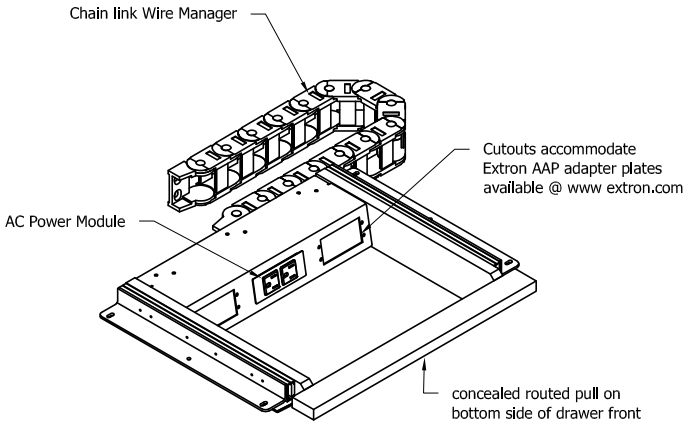

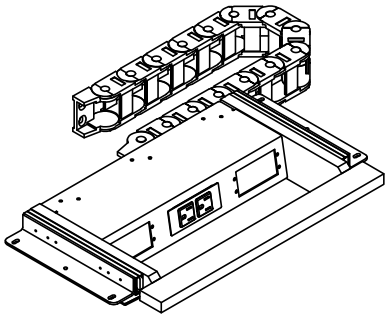

Large Drawer
- 6 1/2″ deep x 12 3/4″ wide flat storage with 2 1/2″ interior height
- 3/8″ gap above drawer tor cord exit.
- Concealed routed finger pull under front
- Used at table ends
- Used along the length of 60″ / 72″ deep tables
- Interior drawer finish: Black powder coat metallic (MC12)
- Drawer front matches lower layer finish
- Provided with 1 AC power module - specify hard-wired (HW) or plug in (PI), and 2 single space blank plates

Small Drawer
- 1 7/8″ deep x 12 3/4″ wide flat storage with 2 1/2″ Interior height
- 3/8″ gap above drawer for cord exit
- Concealed routed finger pull under front
- Used along the length of 48″ / 54″ deep tables
- Interior drawer finish: Black powder coat metallic (MC12)
- Drawer front matches lower layer finish
- Provided with 1 AC power module - specify hard-wired (HW) or plug in (PI), and 2 single space blank plates

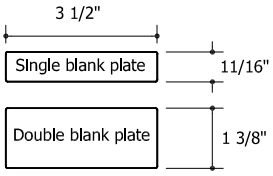

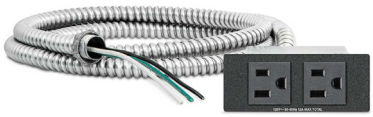

AC Module Hardwired (HW)
- 3/8” diameter x 6’ long metal clad cable with 6” pigtail
- Additional knockouts for series wiring
- 12A max per module

AC Module Plug In (PI)
- 7.5’ detachable soft cord
- 6A max per module

Highline Fifty Collection

Meeting Tables
Power & Connectivity
Table Top

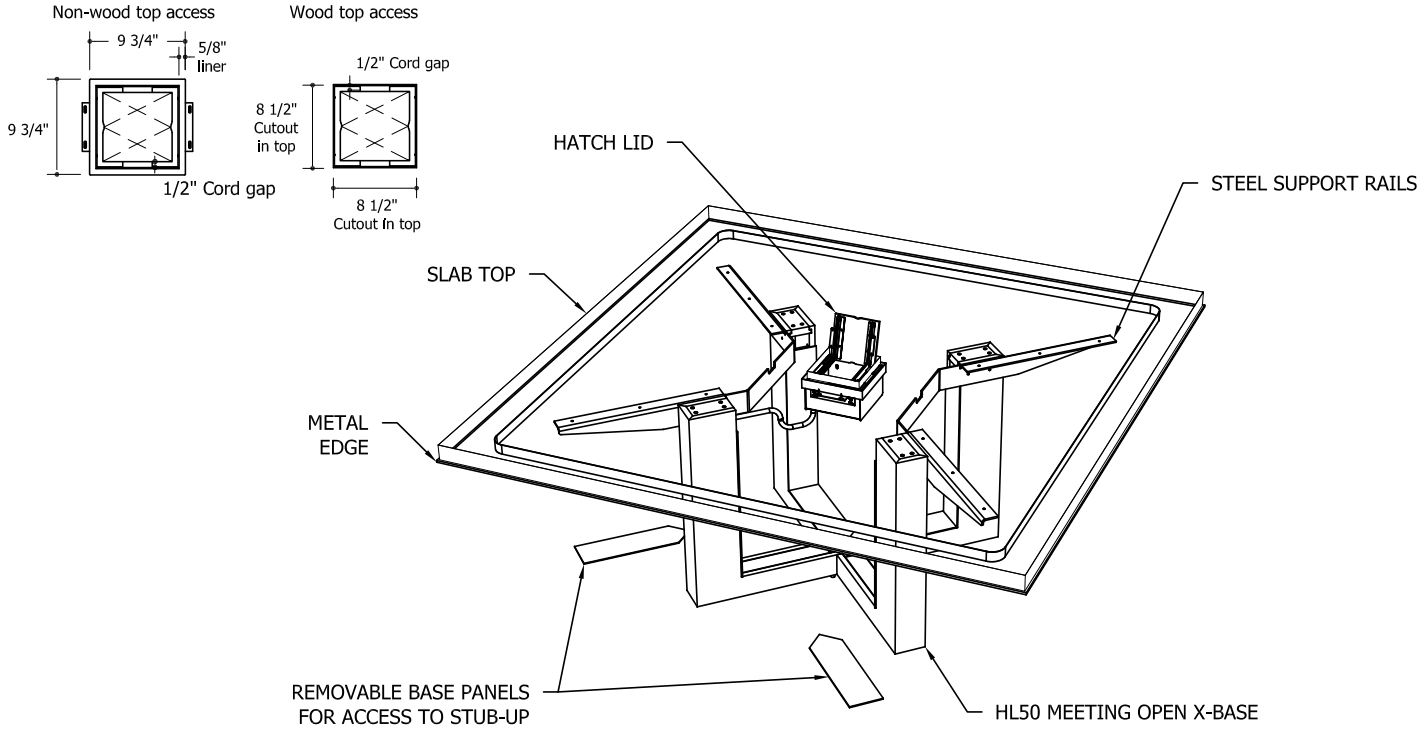

- Wood access lid is used for Slab (S) and Veneer (V) Top Material
- Metal access lid and liner are used for all other Top Materials

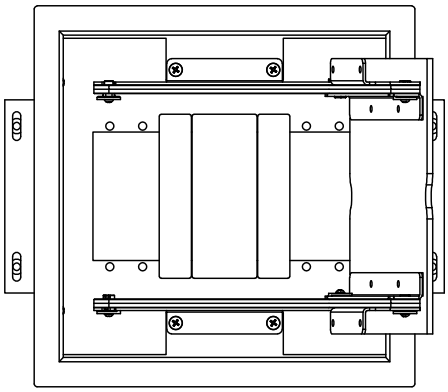

Table Top access - shown with (1)double and (2)single plank plates.

- Provided with:
  - (2) AC power modules - specify hardwired (HW) or plug in (PI),
  - (2)single and (3) double space blank plates
  - (2) retractor cutouts with blanks - 1,2 or 3 knockout plates available
- For additional connectivity, replace double and single space blanks with Extron single or double space AAP plates as desired.
- Designed to accommodate Extron Series 2 retractors.
- For more information see **extron.com**

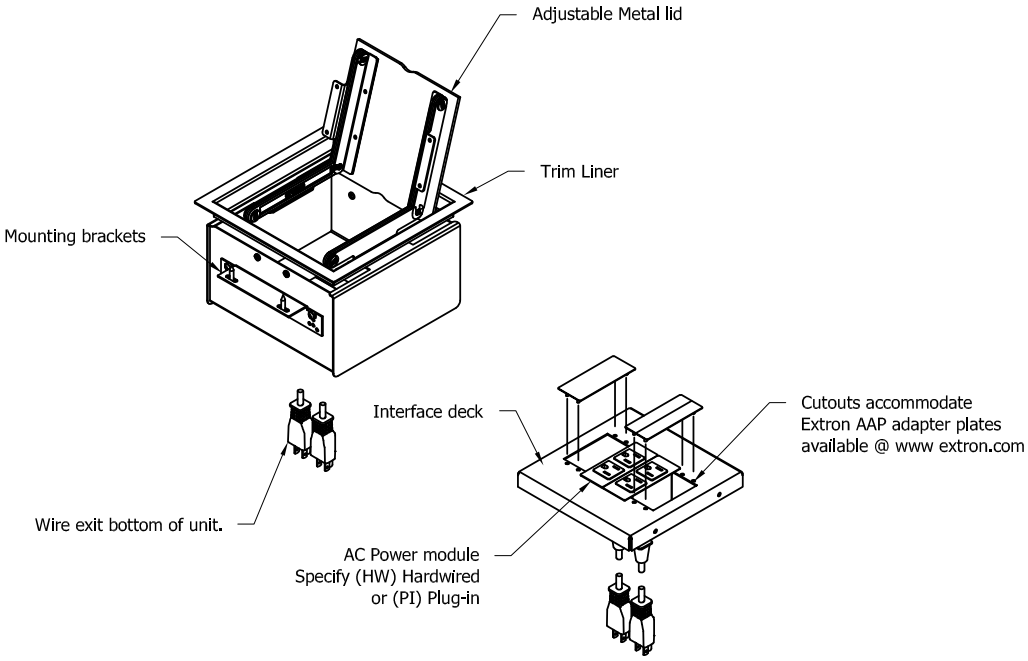

Table Top access - shown populated.

- Provided with:
  (2) AC power modules - specify hardwired (HW) or plug in (PI),
  (2)single and (3) double space blank plates
  (2) retractor cutouts with blanks - 1,2 or 3 knockout plates available
- For additional connectivity, replace double and single space blanks with Extron single or double space AAP plates as desired.
- Designed to accommodate Extron Series 2 retractors.
- For more information see **extron.com**

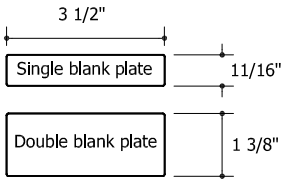

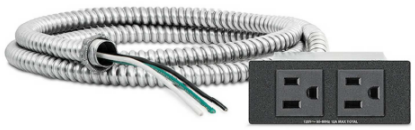

AC Module Hardwired (HW)
- 3/8" diameter x 6' long metal-clad cable with 6" pigtail
- Additional knockouts for series wiring
- 12A max per module

AC Module Plug In (PI)
- 7.5' detachable soft cord
- 6A max per module

Highline Fifty Collection

Meeting Tables
Power & Connectivity
Undermount

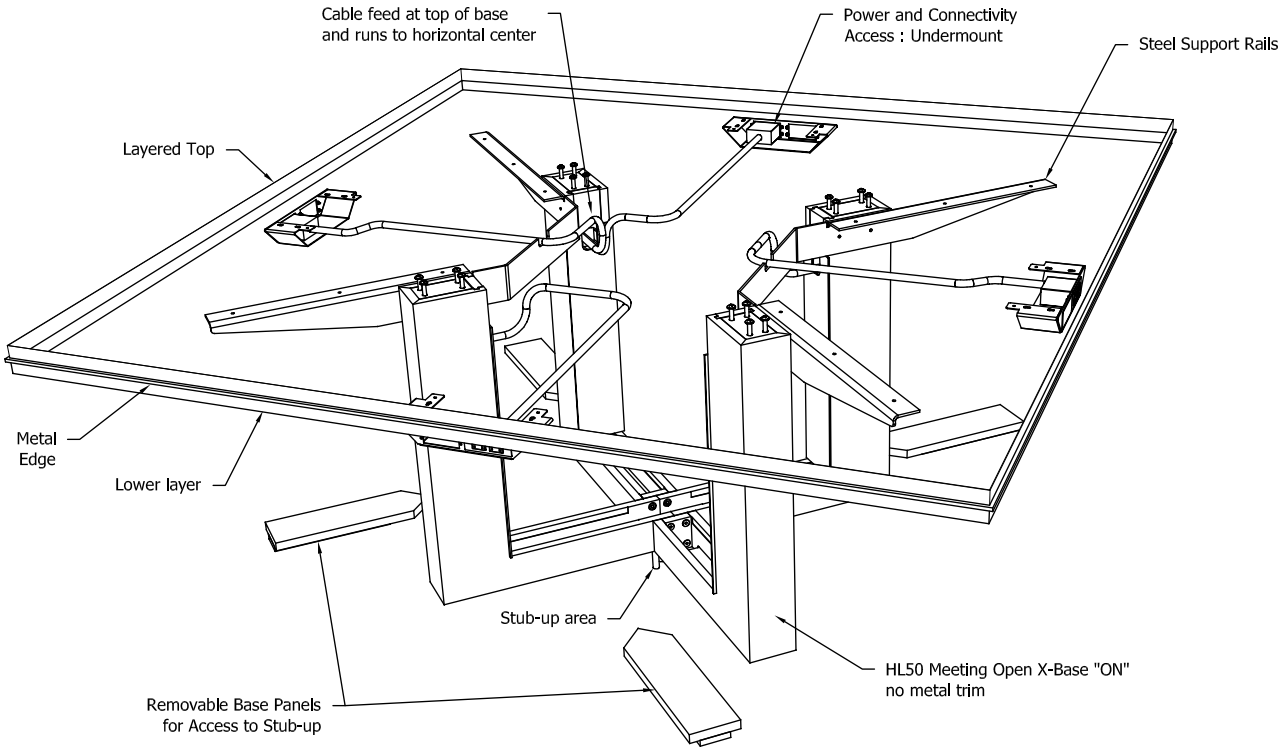

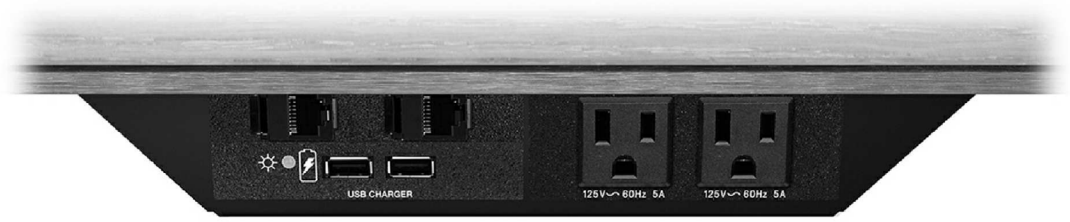

Undermount access (shown populated)
- Black powder coat metallic finish (MC12)
- Provided with 1 AC power module - specify hardwired (HW) or plug in (PI), and 2 single space blank plates
- For additional connectivity replace blank plates with Extron single or double space AAP plates as desired. For more information see **extron.com**

Highline Fifty Collection

Meeting Tables
Power & Connectivity
Undermount

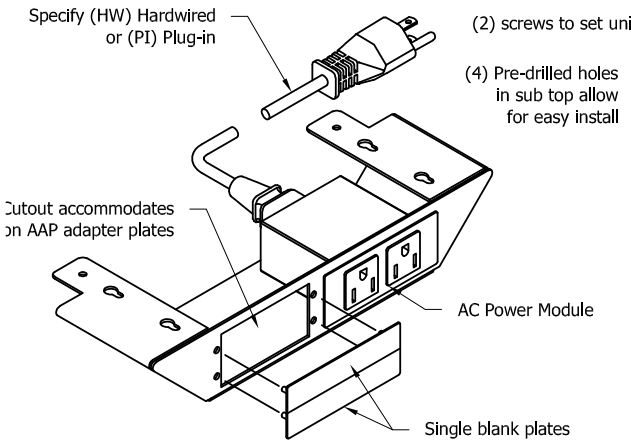

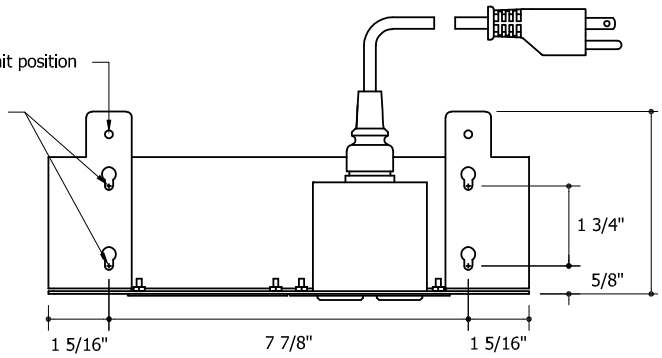

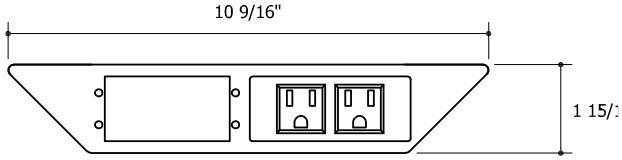

- Black powder coat metallic finish (MC12)
- Provided with 1 AC power module - specify hardwired (HW) or plug in (PI), and 2 single space blank plates
- For additional connectivity replace blank plates with Extron single
  or double space AAP plates as desired. For more information

see
extron.com

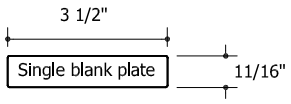

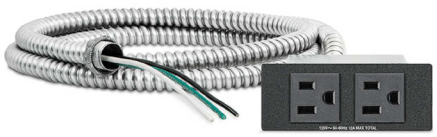

AC Module Hardwired (HW)
- 3/8" diameter x 6' long metal clad cable with 6" pigtail
- Additional knockouts for series wiring
- 12A max per module

AC Module Plug In (PI)
- 7.5' detachable soft cord
- 6A max per module

Highline Fifty Collection

Credenzas
Elevations and Optional Tops

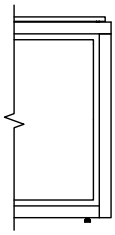

Optional Top
3/4" Caesarstone

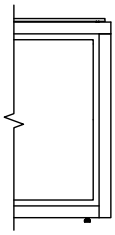

Optional Top
1/2" Corlan

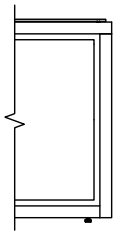

Optional Top
3/8" Glass

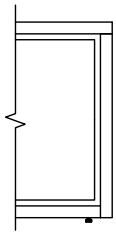

Optional Top
None

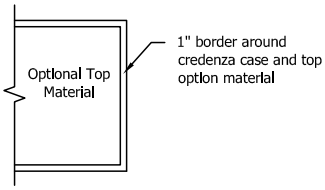

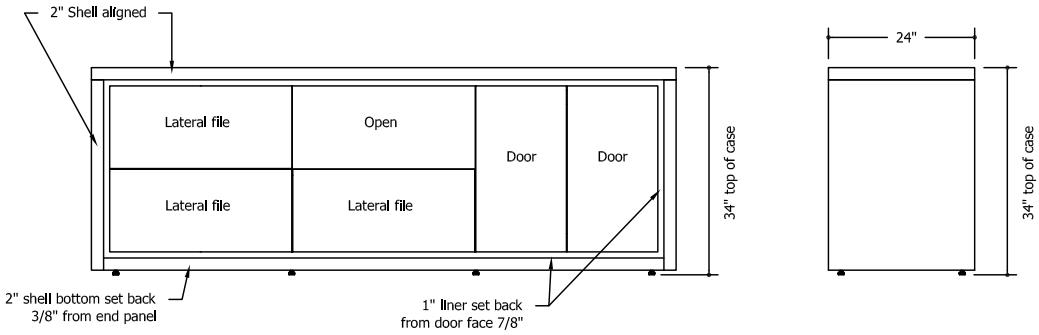

Buffet Height Credenza

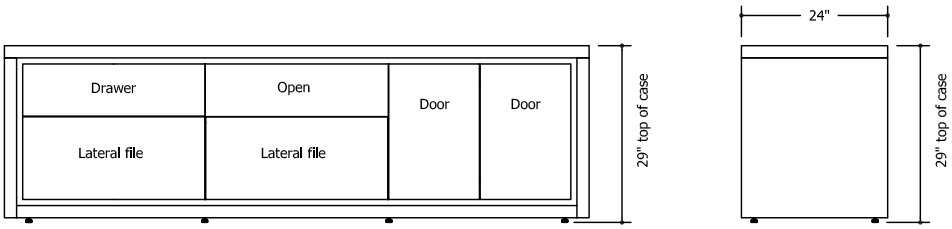

Conference Height Credenza

Highline Fifty Collection

Credenzas
Case Details

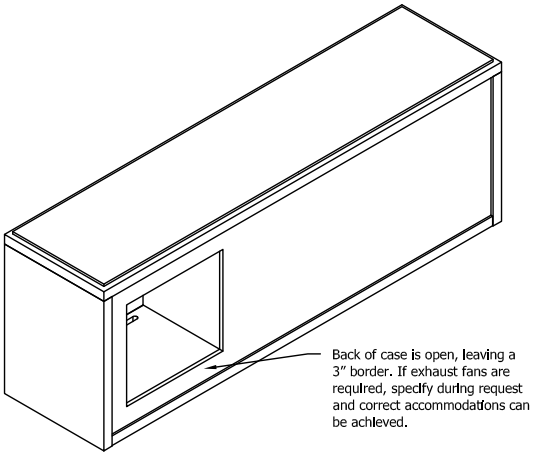

Back of Credenza

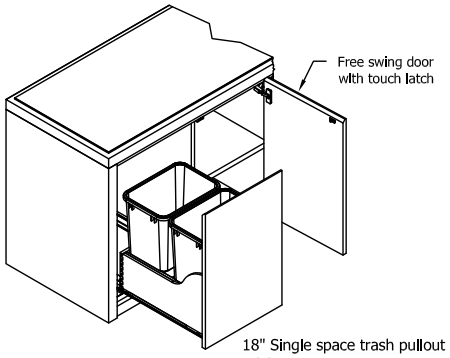

18" Single space trash pullout
- (2) 8.75 gallon receptacles
- Front to back orientation
- Containers are black plastic

36" Double space trash pullout
-(4) 8.75 gallon receptacles
-Front to back orientation
-Containers are black plastic

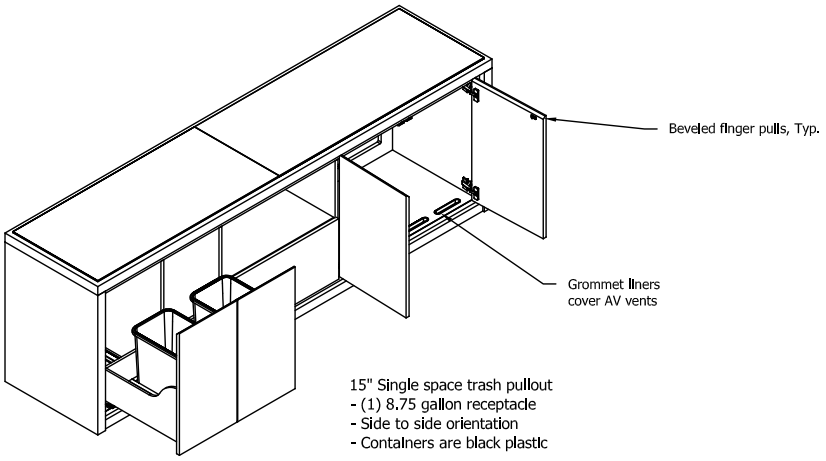

Front of Credenza

15" Single space trash pullout
- (1) 8.75 gallon receptacle
- Side to side orientation
- Containers are black plastic

30" Double space trash pullout
- (2) 8.75 gallon receptacles
- Side to side orientation
- Containers are black plastic

Credenza Notes
- Pulls are 45 degrees inside bevel
- All drawers have a beveled pull on back edge of each front
- Top drawer has bevel on top edge, bottom drawer has bevel at bottom edge
- All drawers are equipped with full extension slides
- All doors are equipped with self-closing hinges
- All credenza top material options are secured to the case with silicone except full clear glass (FG GC00)
- Full clear glass (FG GC00) sets on top of 1/16" bumpers located on top of case
- Trash option is pull-out only
- Pull-out trash unit is a Rev-A-Shelf product.

Audio Visual Requirements:
- Coordinate AV requirements with the interior clearance dimensions provided below to ensure fit. All AV cases have air vent grommet at the bottom front and an open back w3" border. Consult with your AV contractor for specific component requirements. Custom solutions are available on request

- Conference height 30" Bay:
  25.75" width x 19" depth x 21.5" height
- Buffet height 30" Bay:
  25.75" width x 19" depth x 26.5" height

- Conference height 36" Bay:
  31.75" width x 19" depth x 21.5" height
- Buffet height 36" bay:
  31.75" width x 19" depth x 26.5" height

Highline Fifty Collection

Credenzas
Conference Height: 29″
Configurations: 15″ and 30″ modules

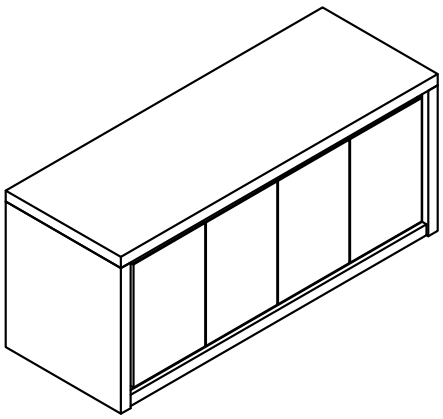

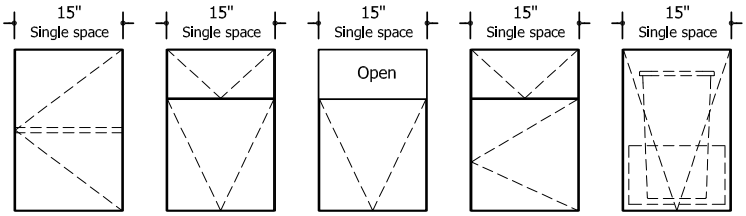

DR15C
(Door w/adj. shelf)

DF15C
(1 Drawer over 1 file)

OF15C
(Open over 1 File)

DD15C
(1 Drawer over 1 Door)

TP15C
(Pullout trash
1 receptacle)

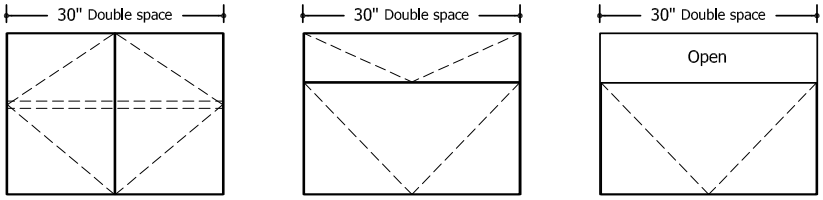

DR30C
(2 Doors w/adj. shelf)

DF30C
(1 Drawer over 1 Lateral file)

OF30C
(Open over 1 Lateral file)

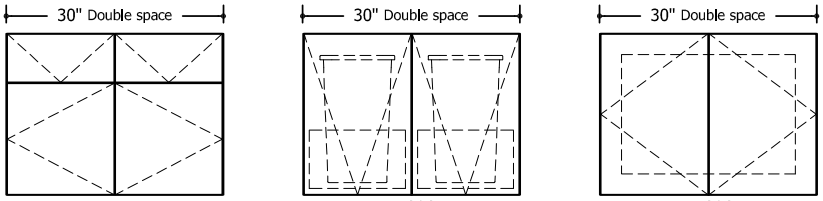

DD30C
(2 Drawers over 2 Doors)

TP30C
(Double pullout trash 2 receptacles)

AV30C
(2 Doors, AV venting large wire access)

Highline Fifty Collection

Credenzas
Buffet Height: 34″
Configurations: 15″ and 30″ modules

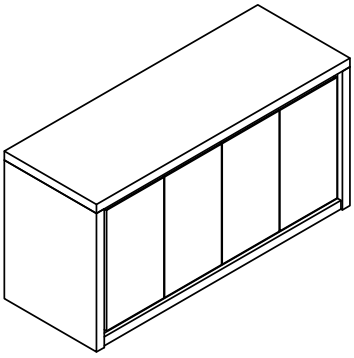

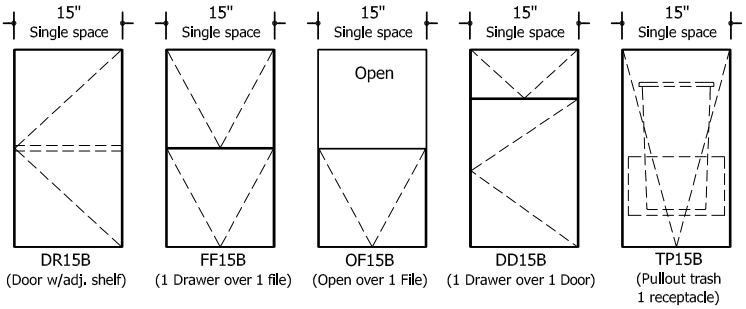

DR15B (Door w/adj. shelf)
FF15B (1 Drawer over 1 file)
OF15B (Open over 1 File)
DD15B (1 Drawer over 1 Door)
TP15B (Pullout trash 1 receptacle)

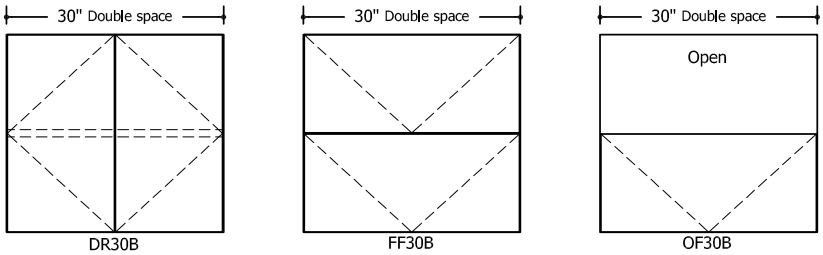

DR30B (2 Doors w/adj. shelf)
FF30B (1 Lateral over 1 Lateral file)
OF30B (Open over 1 Lateral file)

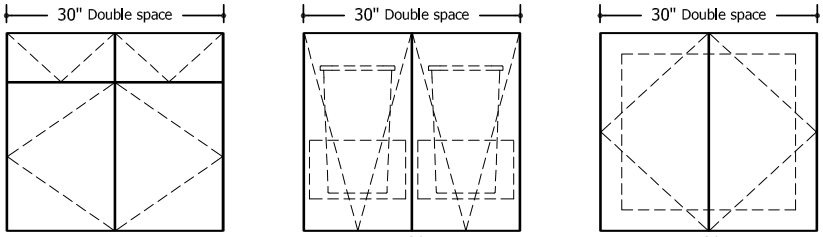

DD30B (2 Drawers over 2 Doors)
TP30B (Double pullout trash 2 receptacles)
AV30B (2 Doors, AV venting large wire access)

Highline Fifty Collection

Credenzas
Conference Height: 29″
Configurations: 18″ and 36″ modules

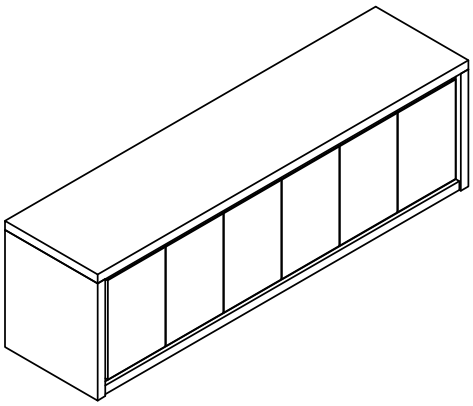

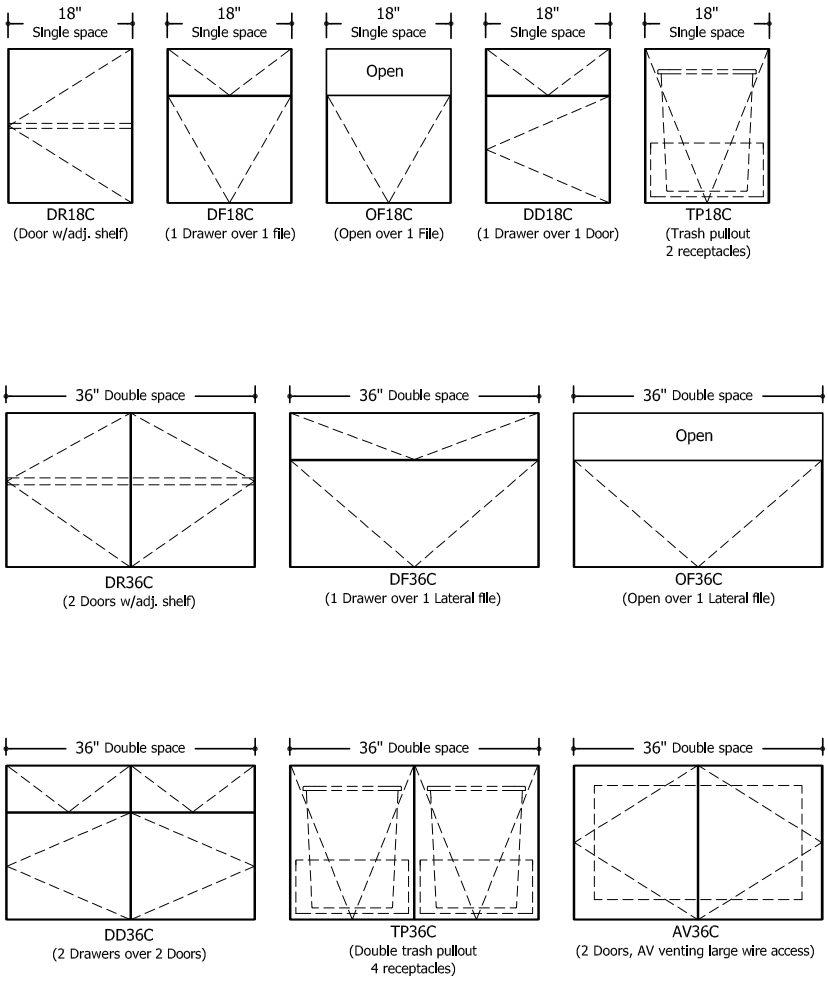

Highline Fifty Collection

Credenzas
Buffet Height: 34″
Configurations: 18″ and 36″ modules

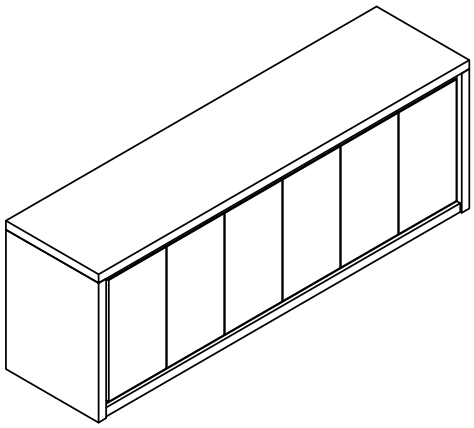

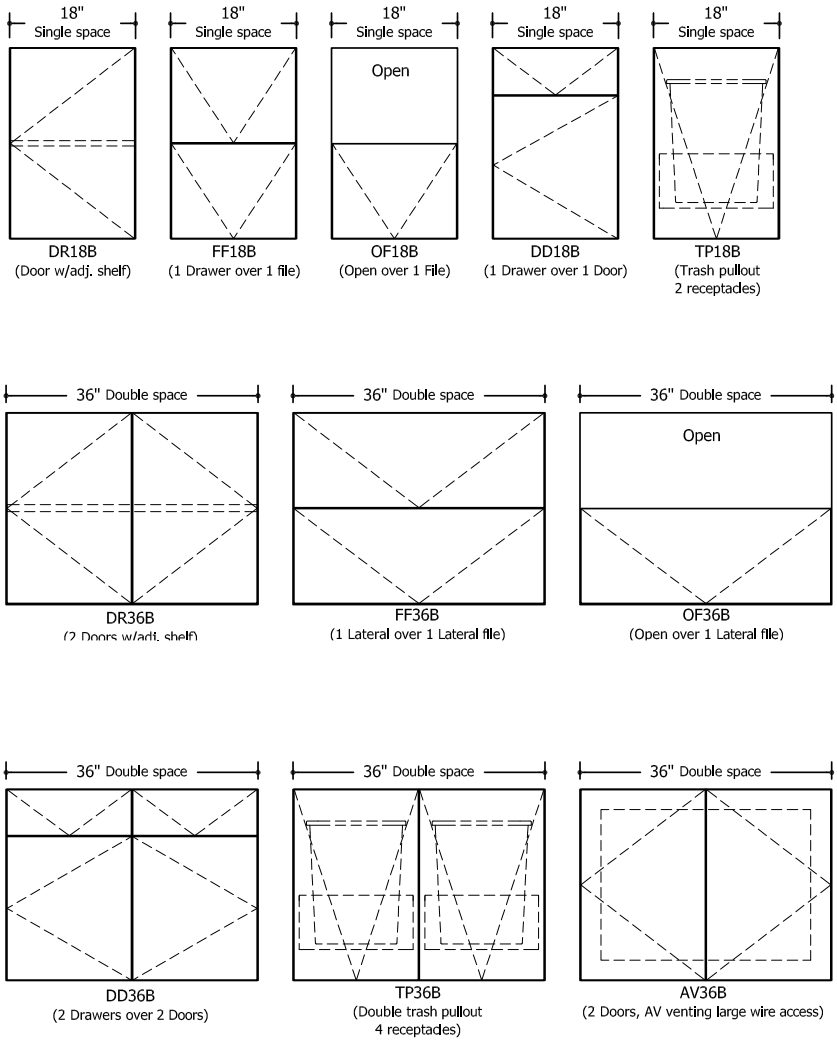

Highline Twenty-Five Collection

Credenzas
Elevations and Optional Tops

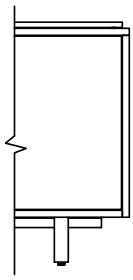

Optional Top
3/4" Caesarstone

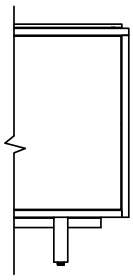

Optional Top
1/2" Corian

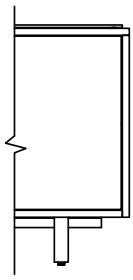

Optional Top
3/8" Glass

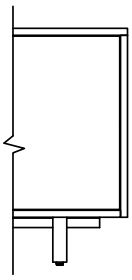

Optional Top
None

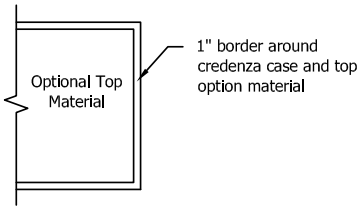

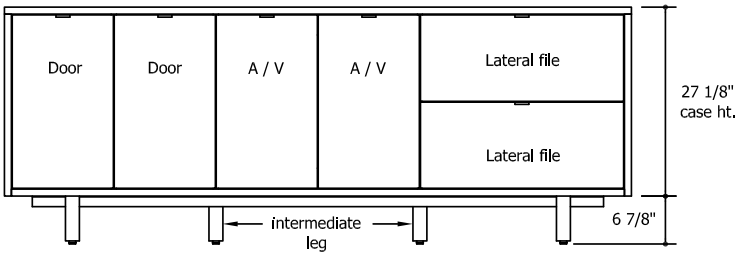

Buffet Height Credenza

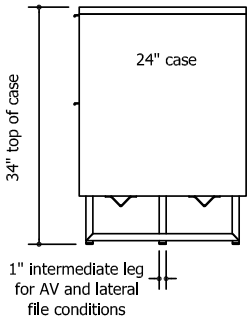

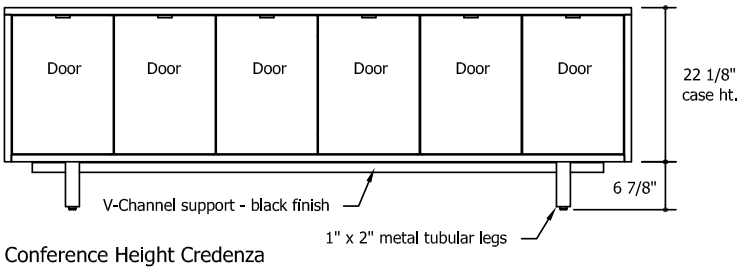

Conference Height Credenza

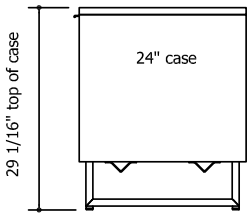

Credenza
Case Details

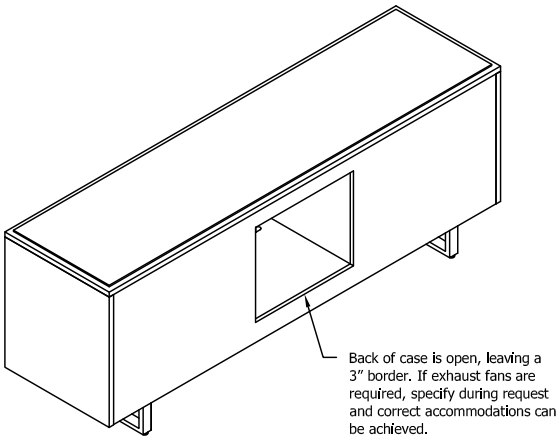

Back of Credenza

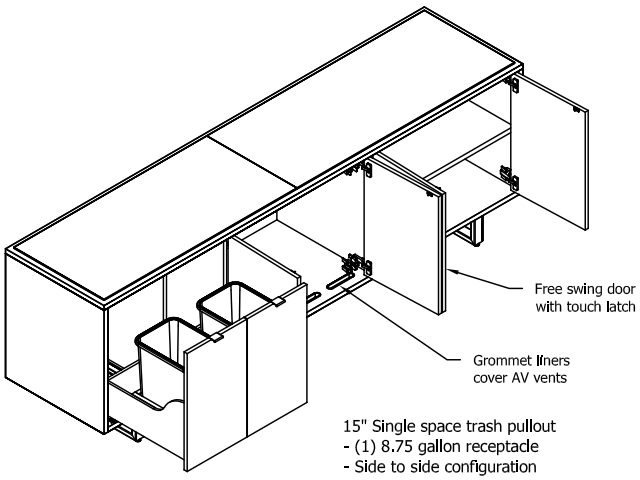

Front of Credenza

15" Single space trash pullout
- (1) 8.75 gallon receptacle
- Side to side configuration
- Containers are black plastic

30" Double space trash pullout
- (2) 8.75 gallon receptacles
- Side to side configuration
- Containers are black plastic

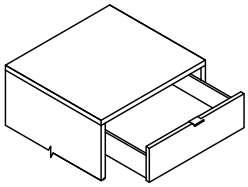

Drawer with 2" tab pull

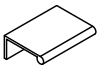

2" tab pull

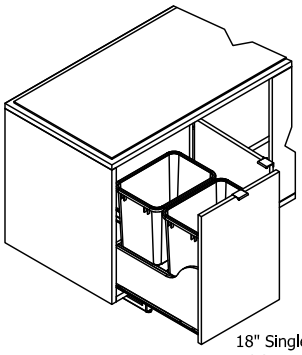

18" Single space trash pullout
- (2) 8.75 gallon receptacles
- Front to back orientation
- Containers are black plastic

36" Double space trash pullout
- (4) 8.75 gallon receptacles
- Front to back orientation
- Containers are black plastic

Credenza Notes:
- 2" metal pulls to compliment metal legs
- All drawers have a 2" tab pull that Is located in the center of the top edge of each front
- All drawers use full extension slides
- All doors use free swing hinges and touch latches.
- All credenza top material options are secured to the case with silicone except full clear glass (FG GC00)
- Full clear glass (FG CG00) sets on top of 1/16" bumpers located on top of case
- Trash option is pull-out only
- Pull-out trash unit is a Rev-A-Shelf product.

Audio Visual Requirements:
- Coordinate AV requirements with the interior clearance dimensions provided below to ensure fit. All AV cases have air vent grommet at the bottom front and an open back width 3" border. Consult with your AV contractor for specific component requirements. Custom solutions are available on request

- Conference height 30" Bay:
  25.15" width x 21.25" depth x 19.18" height

- Buffet height 30" Bay:
  25.15" width x 21.25" depth x 24.18" height

- Conference height 36" Bay:
  31.13" width x 21.25"depth x 19.18" height

- Buffet height 36" Bay:

Highline Twenty-Five Collection

Credenzas
Conference Height: 29″
Configurations: 15″ and 30″ modules

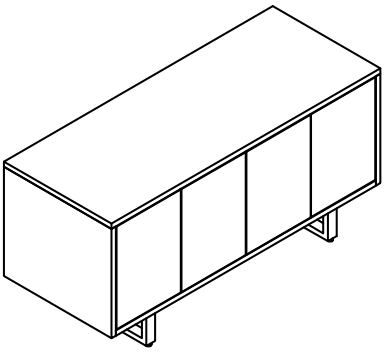

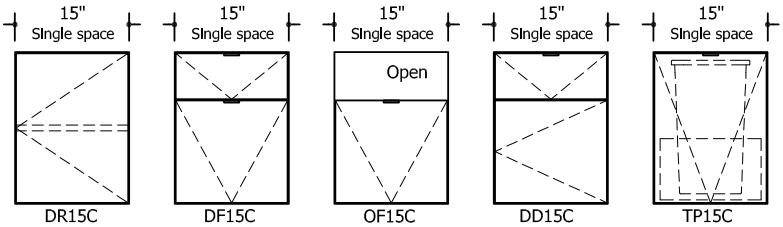

DR15C
(Door w/adj. shelf)

DF15C
(1 Drawer over 1 file)

OF15C
(Open over 1 File)

DD15C
(1 Drawer over 1 Door)

TP15C
(Trash pullout
1 receptacle)

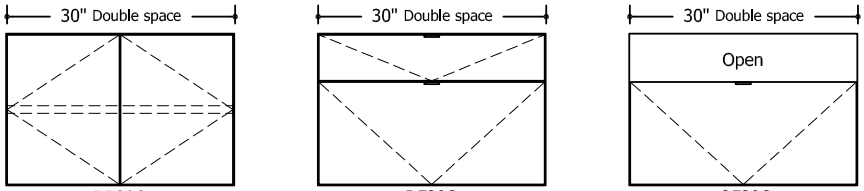

DR30C
(2 Doors w/adj. shelf)

DF30C
(1 Drawer over 1 Lateral file)

OF30C
(Open over 1 Lateral file)

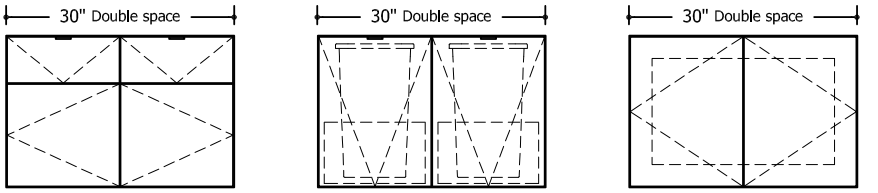

DD30C
(2 Drawers over 2 Doors)

TP30C
(Double trash pullout
2 receptacles)

AV30C
(2 Doors, AV venting large wire access)

Highline Twenty-Five Collection

Credenzas
Buffet Height: 15″
Configurations: 15″ + 30″ models

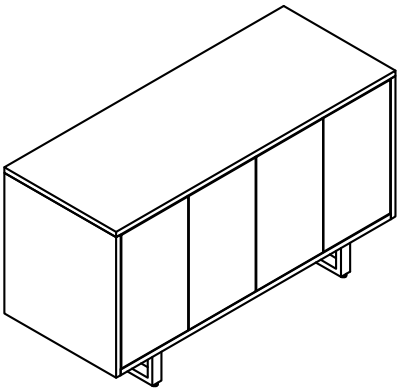

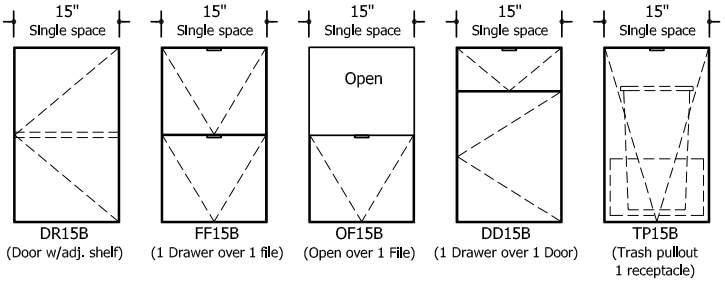

DR15B
(Door w/adj. shelf)

FF15B
(1 Drawer over 1 file)

OF15B
(Open over 1 File)

DD15B
(1 Drawer over 1 Door)

TP15B
(Trash pullout
1 receptacle)

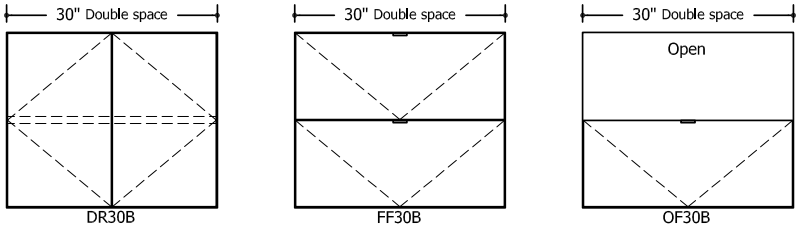

DR30B
(2 Doors w/adj. shelf)

FF30B
(1 Lateral over 1 Lateral file)

OF30B
(Open over 1 Lateral file)

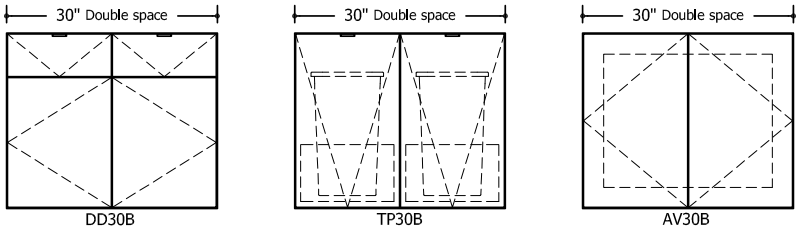

DD30B
(2 Drawers over 2 Doors)

TP30B
(Double trash pullout
2 receptacles)

AV30B
(2 Doors, AV venting large wire access)

Highline Twenty-Five Collection

Credenzas
Conference Height: 29″
Configurations: 18″ and 36″ modules

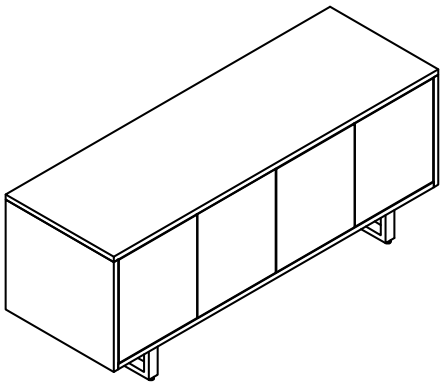

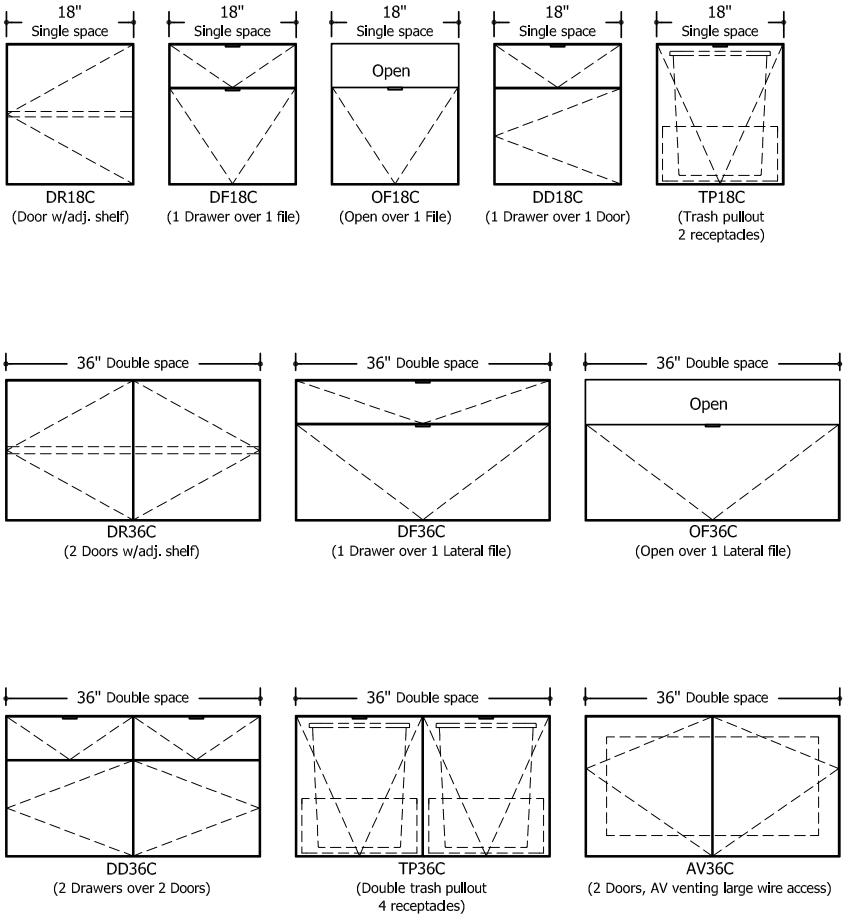

Highline Twenty-Five Collection

Credenzas
Buffet Height: 34″
Configurations: 18″ and 36″ modules

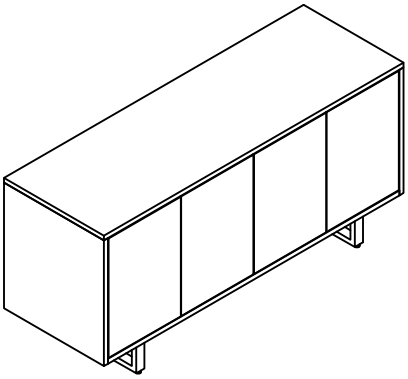

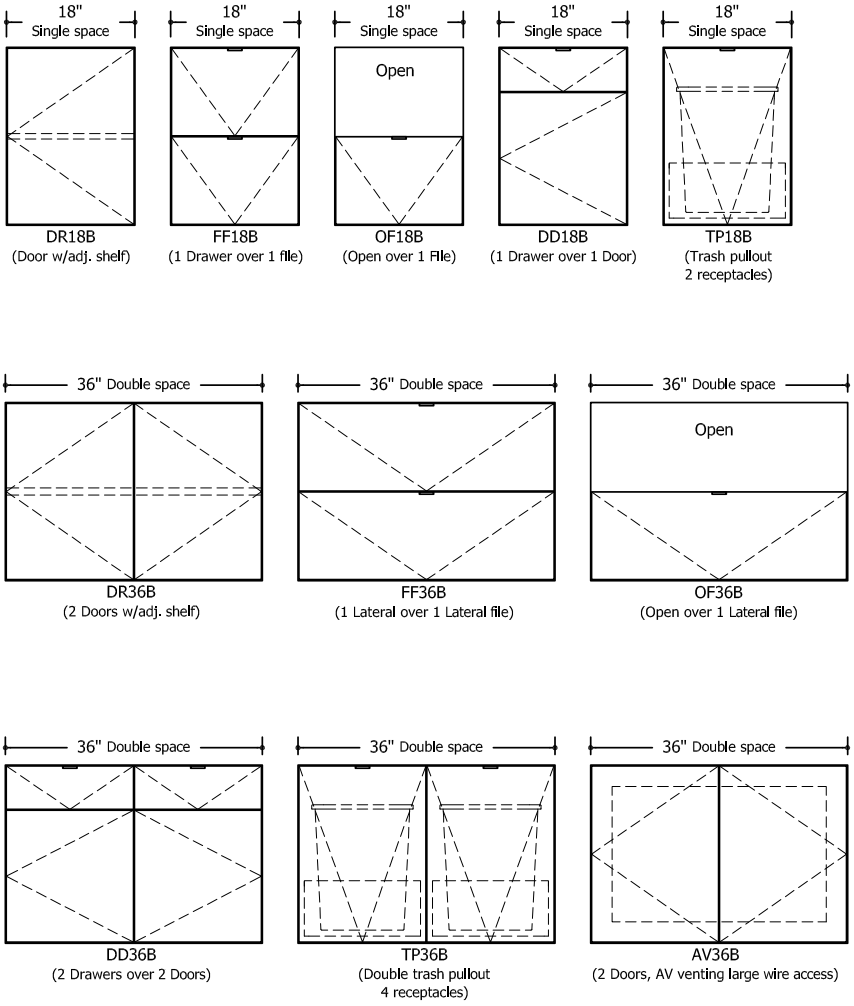

Accessories

Power & Connectivity
Slide Out Power Box

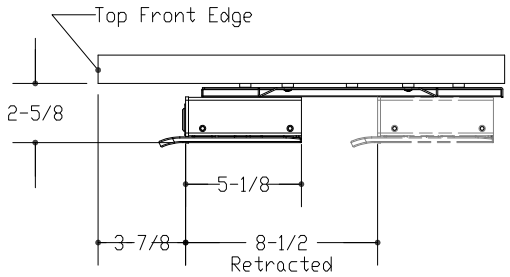

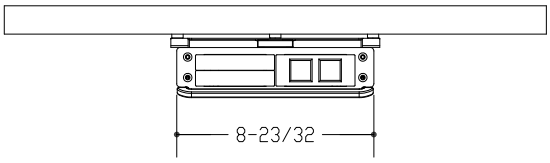

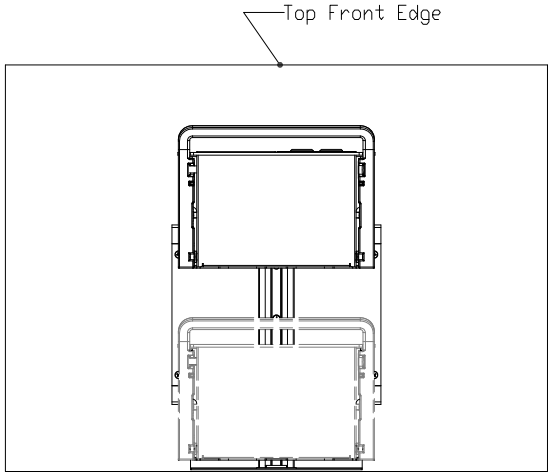

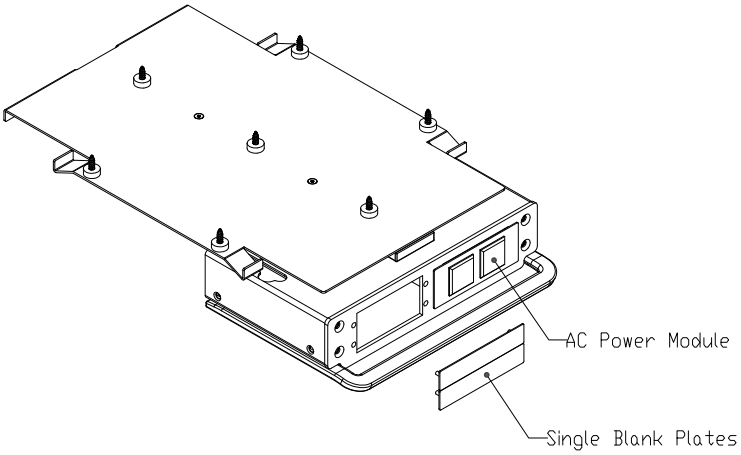

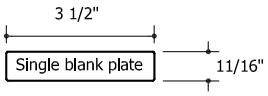

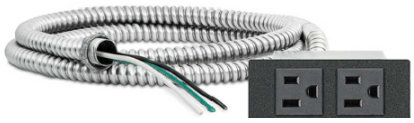

AC Module Hardwired (HW)
- 3/8” diameter x 6’ long metal-clad cable with 6” pigtail
- Additional knockouts for series wiring
- 12A max per module

AC
Module Plug In (PI)
- 7.5’ detachable soft cord
- 6A max per module

Accessories

Power & Connectivity
Linkable USB Kits for Power Boxes

Linkable USB kits come in configurations of 4, 6, 8 or 10 module kits accommodating tables ranging up to 240” in length and 72” in depth.

Fits Double AAP Opening (Same as Extron Dual-AC Module 70-584-02) provided in all Tabletop, Undermount, Slide-Out Box and Power Drawer applications.

One power infeed required for every 8 modules.

All components finished black.

Each kit contains everything needed for installation. Including P-Clips for wire management. (Note: Power Boxes and Drawers are specified and ordered separately with table.)

Technical Specifications:

- 2- 1.2A/5VDC USB Charging Ports per Module
- 150W/5VDC or 250W/5VDC Power Supply
- 16 Gage Direct Current Jumper Cables
- USA NEMA 5-15 and 15 Amp with 90° Plug
- UL 1310 Class 2 Listed
- Meets USB.org Battery Charging 1.2 Specifications

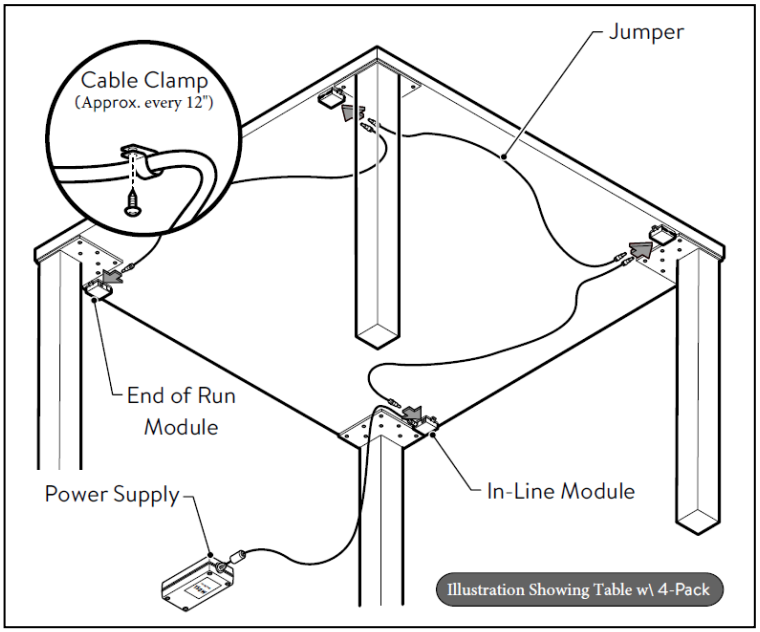

USB Module Assembly *
In-Line & End-Of-Line Configurations

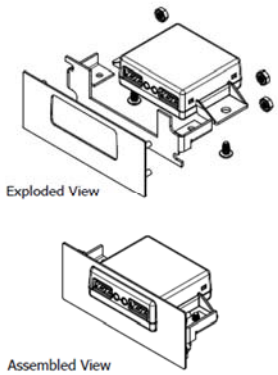

Power Splitter *

Jumper Cable, 72"L

Power Supply, 42"L **

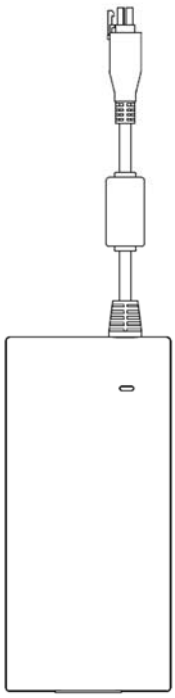

AC Power Cord, 72"L

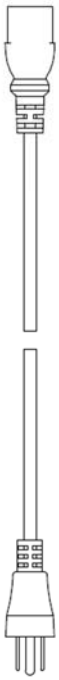

* ONLY INCLUDED ON CERTAIN SIZES
** MAY NOT LOOK EXACTLY AS SHOWN